CITY OF SANTA BARBARA SANITARY SEWER STANDARD DETAILS. TO BE USED WITH STANDARD SPECIFICATIONS FOR PUBLIC WORKS CONSTRUCTION 2018 EDITION (STANDARD SPECIFICATION). ALL WORK WHICH REQUIRES PAVEMENT RESTORATION SHALL COMPLY WITH CITY STANDARD DETAILS - UNDERGROUND UTILITIES SECTIONS U-01.1 THROUGH U-03.2. REFER TO APPROVED STANDARD MATERIALS LIST FOR WATER/WASTEWATER FOR MATERIALS SPECIFIED IN THESE STANDARD DETAILS WITHOUT THE ALLOWANCE FOR "OR EQUAL".

MANHOLE DETAILS

S-MH1	48" STANDARD PRECAST MANHOLE
S-MH2	60" STANDARD PRECAST MANHOLE
S-MH3	24" DIAMETER PRE-CAST ACCESS STRUCTURE
S-MH4	24" DIAMETER PVC/HDPE ACCESS STRUCTURE
S-MH5	SEWER CLEANOUT
S-MH6	MANHOLE COLLAR AND ADJUSTMENT
S-MH7	MANHOLE FRAMES AND COVERS
S-MH8	LOCKING MANHOLE FRAME AND COVER
S-MH9	CONNECTION TO EXISTING MANHOLE
S-MH10	CAST-IN-PLACE MANHOLE BASE
S-MH11	MANHOLE ABANDONMENT
S-MH12	ABANDONMENT OF SEWER PIPE
S-MH13	OUTSIDE DROP INLET CONNECTION
S-MH14	INSIDE DROP INLET CONNECTION
S-MH15	MANHOLE COATING AND LINING SYSTEMS

PIPELINE DETAILS

S-SP 1	SEWER PIPE BEDDING, HAUNCH SUPPORT AND BACKFILL
S-SP 2	CONCRETE CRADLE AND ENCASEMENT
S-SP 3	STANDARD POINT REPAIR

LATERAL DETAILS

S-SL1	STANDARD LATERAL DETAIL AND NOTES
S-SL2	LATERAL CONNECTION MATRIX
S-SL3	TYPICAL VCP LATERAL CONNECTION
S-SL4	NEW LATERALS TO PVC MAIN
S-SL5	LATERAL CONNECTION TO HDPE MAIN
S-SL6	LATERAL CONNECTION TO REHABILITATED MAIN
S-SL7	CHIMNEY AND SLOPING LATERAL CONNECTION

MISCELLANEOUS SEWER DETAILS

MISC-FOG	GREASE CONTROL DEVICE (GCD)

SANITARY SEWER STANDARD DETAILS TABLE OF CONTENTS

REV. DATE: 06/2020 | DETAIL: S-TOC

APPROVED:

CITY ENGINEER

PUBLIC WORKS DIRECTOR

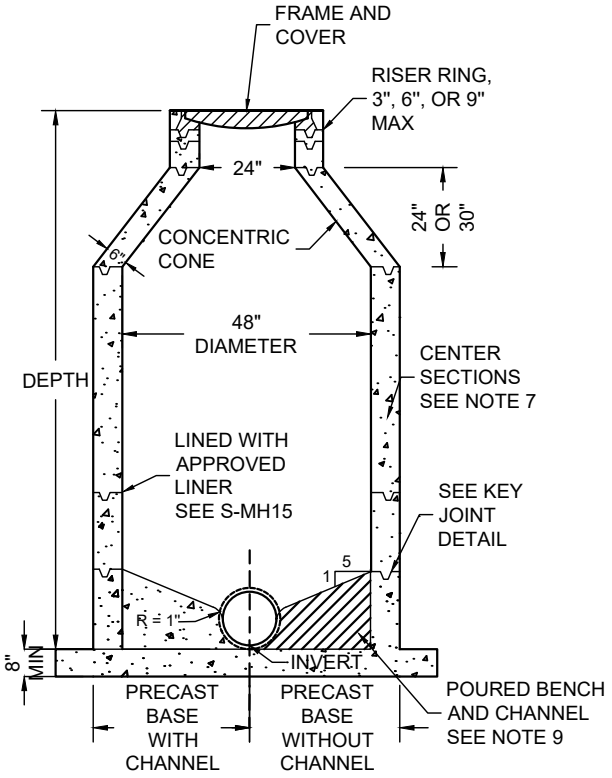

48" MANHOLE
PROFILE

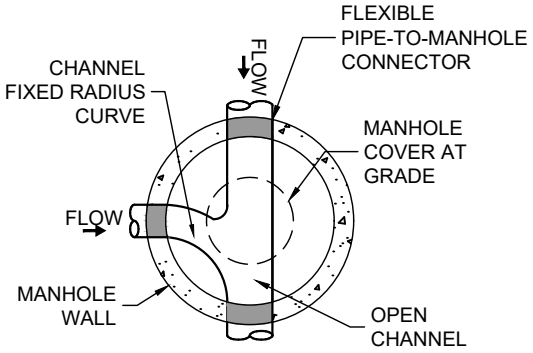

48" MANHOLE
PLAN

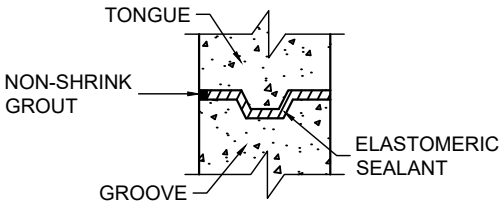

KEY JOINT
DETAIL

NOTES:

1. MANHOLE SHALL BE 48" IN DIAMETER IF SEWER MAIN DIAMETER IS SMALLER THAN OR EQUAL TO 15" OR RECEIVES DISCHARGE DIRECTLY FROM A FORCE MAIN (TRANSITION MANHOLE).

MATERIALS:

2. KEY JOINTS SHALL BE TONGUE AND GROOVE PER DETAIL, SET WITH ELASTOMERIC SEALANT. INSIDE OF JOINTS SHALL BE GROUTED WITH NON-SHRINK GROUT.
3. GAPS AND HOLES BETWEEN MANHOLE BASE AND PIPE CONNECTIONS SHALL BE FILLED WITH NON-SHRINK GROUT.
4. PRE-CAST BASE SHALL BE BEDDED ON A MINIMUM OF 6" OF WELL GRADED, $\frac{3}{4}$" ANGULAR CRUSHED ROCK OVER NATIVE MATERIAL THAT IS EITHER UNDISTURBED OR COMPACTED PER GREENBOOK STANDARDS, WITH A RELATIVE COMPACTION ≥ 95%.

CONSTRUCTION:

5. RISERS, CONE, CENTER SECTIONS, AND BASE SHALL CONFORM TO ASTM C-478.
6. CONE SHALL BE CONCENTRIC IF SEWER DEPTH IS LESS THAN 60", ECCENTRIC IF DEPTH IS GREATER THAN 60".
7. MANHOLE SECTIONS SHALL BE PRECAST CONCRETE AND SHALL HAVE 6" MINIMUM WALL THICKNESS WITH MINIMAL REINFORCEMENTS. TYPICAL SECTIONS SHALL BE 12", 16", 24", 32", 36" OR 48" IN HEIGHT.
8. MANHOLE BASE SHALL BE PRE-CAST CONSTRUCTED USING CLASS 560-C-3250 CONCRETE WITH EXTENDED BASE OR POLYMER CONCRETE WITH SIMILAR PROPERTIES. ALL PIPE CONNECTIONS' SIZE, ANGLE, DEPTH AND QUANTITY SHALL BE FIELD VERIFIED AND MEASURED PRIOR TO ORDERING PRECAST BASE. ALL PIPE CONNECTIONS SHALL BE CORED TO FIT FLEXIBLE PIPE-TO-MANHOLE CONNECTORS (KOR-N-SEAL OR EQUAL) EITHER BY MANUFACTURER OR CONTRACTOR USING APPROVED EQUIPMENT.
9. FOR PRE-CAST BASE WITHOUT CHANNEL, BENCH & CHANNEL SHALL BE COMPLETED IN A SINGLE POUR USING CLASS 560-C-3250 CONCRETE WITH STEEL TROWEL FINISH.
10. ANY CHANGE IN DIRECTION SHALL BE A FIXED RADIUS CURVE EXTENDING FROM THE INLET WALL TO THE OUTLET WALL.
11. INSIDE SURFACE OF INVERT AND AREA BETWEEN PIPE CONNECTION AND CHANNEL SHALL BE FREE FROM GAPS, HOLES AND SHARP EDGES.
12. ALL INLETS SHALL BE DESIGNED AND INSTALLED SUCH THAT THE TOP OF PIPE ELEVATIONS MATCH AS MUCH AS POSSIBLE.

REFERENCE:

13. COLLAR ADJUSTMENT TO GRADE SHALL BE PER DETAIL S-MH6.
14. STANDARD MANHOLE FRAME AND COVER SHALL BE PER DETAIL S-MH7.

48" STANDARD PRE-CAST MANHOLE

REV. DATE: 06/2020 | DETAIL: S-MH1

APPROVED:

CITY ENGINEER

PUBLIC WORKS DIRECTOR

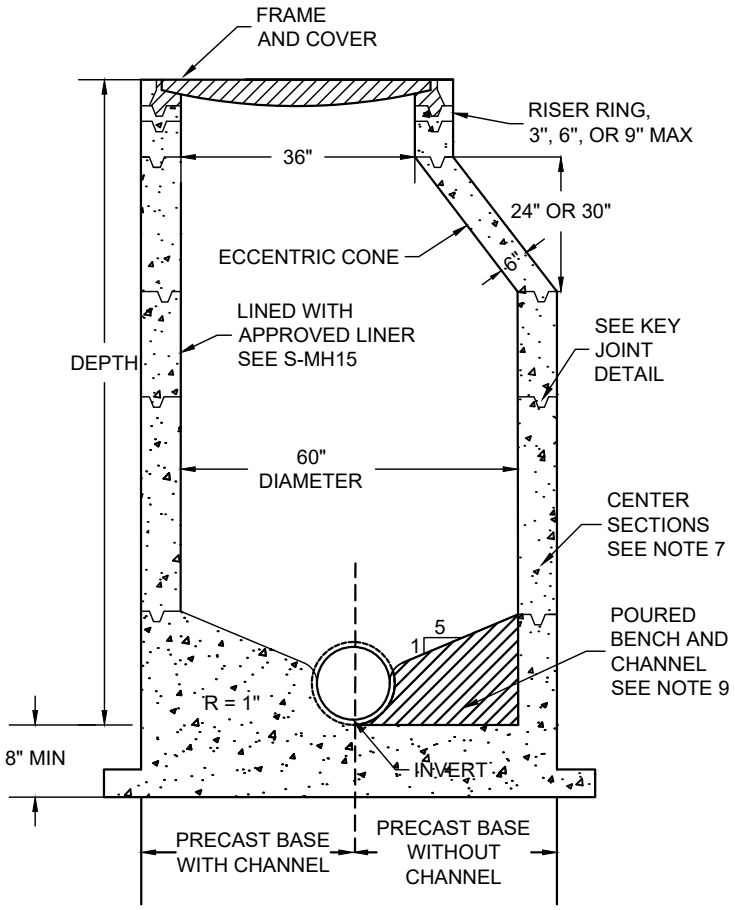

60" MANHOLE

PROFILE

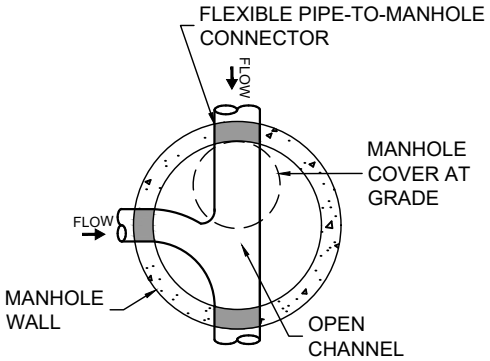

60" MANHOLE

PLAN

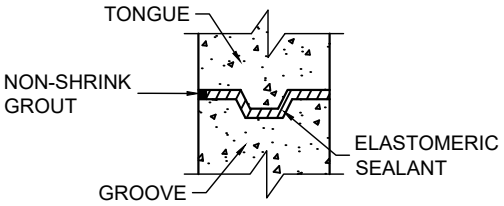

KEY JOINT

DETAIL

NOTES:

1. MANHOLE SHALL BE 60" IN DIAMETER IF SEWER MAIN DIAMETER IS LARGER THAN 15" OR RECEIVES DISCHARGE DIRECTLY FROM A FORCE MAIN (TRANSITION MANHOLE).

MATERIALS:

2. KEY JOINTS SHALL BE TONGUE AND GROOVE PER DETAIL, SET WITH ELASTOMERIC SEALANT. INSIDE OF JOINTS SHALL BE GROUTED WITH NON-SHRINK GROUT.
3. GAPS AND HOLES BETWEEN MANHOLE BASE AND PIPE CONNECTIONS SHALL BE FILLED WITH NON-SHRINK GROUT.
4. PRE-CAST BASE SHALL BE BEDDED ON A MINIMUM OF 6" OF WELL GRADED, $\frac{3}{4}$" ANGULAR CRUSHED ROCK OVER NATIVE MATERIAL THAT IS EITHER UNDISTURBED OR COMPACTED PER GREENBOOK STANDARDS, WITH A RELATIVE COMPACTION ≥ 95%.

CONSTRUCTION:

5. RISERS, CONE, CENTER SECTIONS, AND BASE SHALL CONFORM TO ASTM C-478.
6. CONE SHALL BE CONCENTRIC IF DEPTH IS LESS THAN 60" (AS SHOWN ON S-MH1), ECCENTRIC IF DEPTH IS GREATER THAN 60".
7. MANHOLE SECTIONS SHALL BE PRECAST CONCRETE AND SHALL HAVE 6" MINIMUM WALL THICKNESS WITH MINIMAL REINFORCEMENTS. TYPICAL SECTIONS SHALL BE 12", 16", 24", 32", 36" OR 48" IN HEIGHT.
8. MANHOLE BASE SHALL BE PRE-CAST CONSTRUCTED USING CLASS 560-C-3250 CONCRETE WITH EXTENDED BASE OR POLYMER CONCRETE WITH SIMILAR PROPERTIES. ALL PIPE CONNECTIONS' SIZE, ANGLE, DEPTH AND QUANTITY SHALL BE FIELD VERIFIED AND MEASURED PRIOR TO ORDERING PRECAST BASE. ALL PIPE CONNECTIONS SHALL BE CORED TO FIT FLEXIBLE PIPE-TO-MANHOLE CONNECTORS (KOR-N-SEAL OR EQUAL) EITHER BY MANUFACTURER OR CONTRACTOR USING APPROVED EQUIPMENT.
9. FOR PRE-CAST BASE WITHOUT CHANNEL, BENCH AND CHANNEL SHALL BE COMPLETED IN A SINGLE POUR USING CLASS 560-C-3250 CONCRETE WITH STEEL TROWEL FINISH.
10. ANY CHANGE IN DIRECTION SHALL BE A FIXED RADIUS CURVE EXTENDING FROM THE INLET WALL TO THE OUTLET WALL.
11. INSIDE SURFACE OF INVERT AND AREA BETWEEN PIPE CONNECTION AND CHANNEL SHALL BE FREE FROM GAPS, HOLES AND SHARP EDGES.
12. ALL INLETS SHALL BE DESIGNED AND INSTALLED SUCH THAT THE TOP OF PIPE ELEVATIONS MATCH AS MUCH AS POSSIBLE.

REFERENCE:

13. COLLAR ADJUSTMENT TO GRADE PER DETAIL S-MH6.
14. STANDARD MANHOLE FRAME AND COVER SHALL BE PER DETAIL S-MH7.

60" STANDARD PRE-CAST MANHOLE

REV. DATE: 06/2020 | DETAIL: S-MH2

APPROVED:

CITY ENGINEER

PUBLIC WORKS DIRECTOR

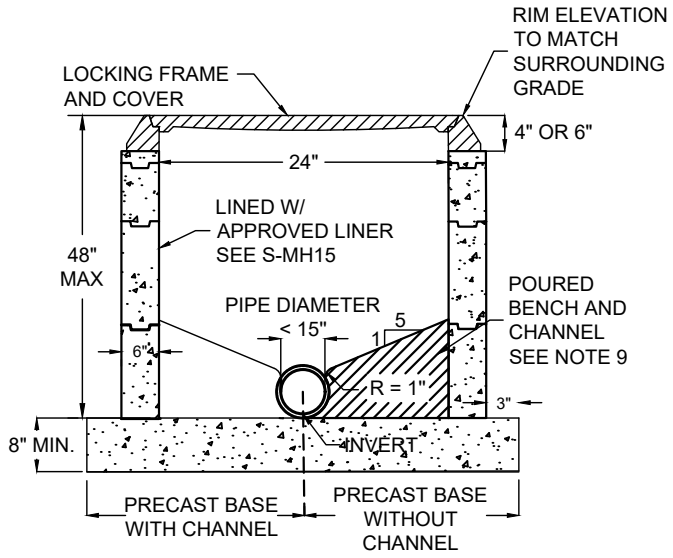

24" DIAMETER PRE-CAST ACCESS STRUCTURE
PROFILE

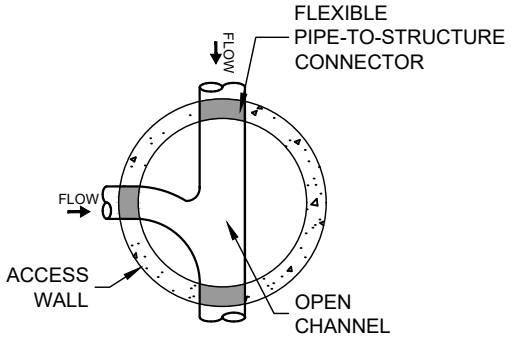

SHALLOW ACCESS
PLAN

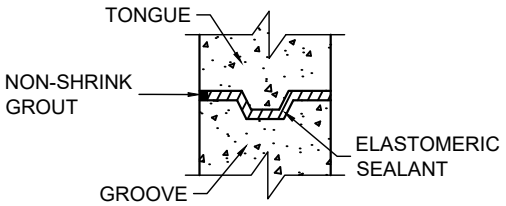

KEYJOINT
DETAIL

NOTES:

1. FOR DEPTH GREATER THAN 48", CONSULT ENGINEER. THIS SHALLOW ACCESS DETAIL TO BE USED IN DRIVABLE AREAS.

MATERIALS:

2. JOINTS SHALL BE TONGUE AND GROOVE KEY JOINTS, SET WITH ELASTOMERIC SEALANT, PER DETAIL. INSIDE OF JOINTS SHALL BE GROUTED WITH NON-SHRINK GROUT.
3. GAPS AND HOLES BETWEEN BASE AND PIPE CONNECTIONS SHALL BE FILLED WITH NON-SHRINK GROUT.
4. THE PRE-CAST BASE SHALL BE BEDDED ON A MINIMUM OF 6" OF WELL GRADED, $\frac{3}{4}$" ANGULAR CRUSHED ROCK OVER NATIVE MATERIAL THAT IS EITHER UNDISTURBED OR COMPACTED PER GREENBOOK STANDARDS, WITH A RELATIVE COMPACTION ≥ 95%.

CONSTRUCTION:

5. RISERS AND BASE SHALL CONFORM TO ASTM C-478.
6. RISER SECTIONS SHALL BE PRE-CAST CONCRETE AND SHALL HAVE 6" MINIMUM WALL THICKNESS WITH MINIMAL REINFORCEMENTS.
7. TYPICAL RISERS SHALL BE 3", 6", 9", OR 12" IN HEIGHT.
8. BASE SHALL BE PRE-CAST CLASS 560-C-3250 CONCRETE WITH EXTENDED BASE. ALL PIPE CONNECTIONS' SIZE, ANGLE, DEPTH AND QUANTITY SHALL BE FIELD VERIFIED AND MEASURED PRIOR TO ORDERING PRECAST BASE. ALL PIPE CONNECTIONS SHALL BE CORED TO FIT FLEXIBLE PIPE-TO-STRUCTURE CONNECTORS (KOR-N-SEAL OR EQUAL) EITHER BY MANUFACTURER OR CONTRACTOR USING APPROVED EQUIPMENT.
9. FOR PRECAST BASE WITHOUT CHANNEL, BENCH & CHANNEL SHALL BE COMPLETED IN A SINGLE POUR USING CLASS 560-C-3250 CONCRETE WITH STEEL TROWEL FINISH.
10. ANY CHANGE IN DIRECTION SHALL BE A FIXED RADIUS CURVE EXTENDING FROM THE INLET WALL TO THE OUTLET WALL.
11. INSIDE SURFACE OF INVERT AND AREA BETWEEN PIPE CONNECTION AND CHANNEL SHALL BE FREE FROM GAPS, HOLES AND SHARP EDGES.
12. ALL INLETS SHALL BE DESIGNED AND INSTALLED SUCH THAT THE TOP OF PIPE ELEVATIONS MATCH AS MUCH AS POSSIBLE.

REFERENCE:

13. COLLAR ADJUSTMENT TO GRADE PER DETAIL S-MH6.
14. STANDARD LOCKING FRAME AND COVER SHALL BE PER DETAIL S-MH8.

24" DIAMETER PRE-CAST ACCESS STRUCTURE

REV. DATE: 06/2020 | DETAIL: S-MH3

APPROVED:

CITY ENGINEER

PUBLIC WORKS DIRECTOR

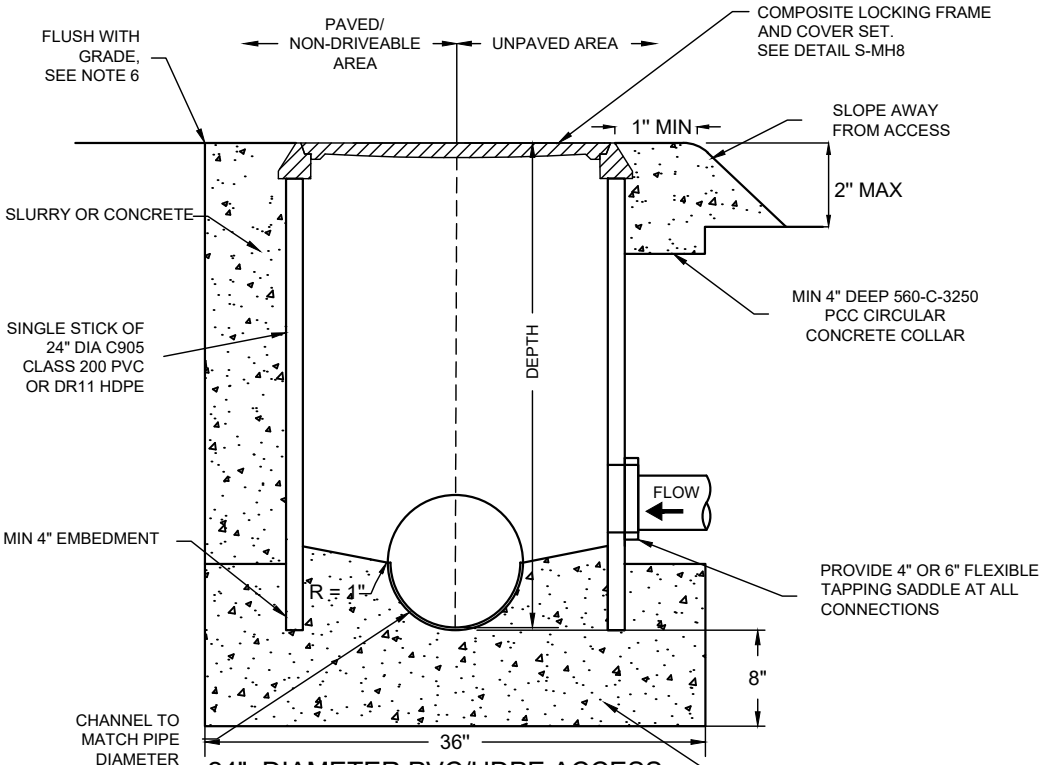

24" DIAMETER PVC/HDPE ACCESS STRUCTURE

PROFILE

NOTES:

1. FOR DEPTH GREATER THAN 48", CONSULT WITH ENGINEER.
2. FOR SEWER MAIN DIAMETER GREATER THAN 8", CONSULT WITH ENGINEER. THIS DETAIL NOT TO BE USED IN DRIVABLE AREA OR VEHICULAR PATH.

MATERIALS:

3. GAPS AND HOLES BETWEEN BASE AND PIPE CONNECTIONS SHALL BE FILLED WITH NON-SHRINK GROUT.
4. THE BASE SHALL BE BEDDED ON A MINIMUM OF 6" OF WELL GRADED, $\frac{3}{4}$" ANGULAR CRUSHED ROCK OVER NATIVE MATERIAL THAT IS EITHER UNDISTURBED, COMPACTED PER GREENBOOK STANDARDS, OR 95%.
5. LOCKING FRAME AND COVER SHALL BE USED IN BOTH PAVED NON DRIVABLE PATH AND UNPAVED AREAS.

CONSTRUCTION:

6. ELEVATION DIFFERENCE BETWEEN FRAME AND EXISTING GRADE SHALL NOT EXCEED $\frac{1}{4}$" FOR PAVED/NON DRIVEABLE AREAS.
7. BASE SHALL CONFORM TO ASTM C-478.
8. BASE SHALL BE CLASS 560-C-3250 CONCRETE WITH EXTENDED BASE. ALL PIPE CONNECTIONS' SIZE, ANGLE, DEPTH AND QUANTITY SHALL BE FIELD VERIFIED AND MEASURED PRIOR TO ORDERING PRECAST BASE. ALL PIPE CONNECTIONS SHALL BE CORED TO FIT FLEXIBLE PIPE-TO-STRUCTURE CONNECTORS (KOR-N-SEAL OR EQUAL) EITHER BY MANUFACTURER OR CONTRACTOR USING APPROVED EQUIPMENT.
9. ANY CHANGE IN DIRECTION SHALL BE A FIXED RADIUS CURVE EXTENDING FROM THE INLET WALL TO THE OUTLET WALL.
10. INSIDE SURFACE OF THE BENCH AND CHANNEL AND AREA BETWEEN THE PIPE CONNECTION AND CHANNEL SHALL BE FREE FROM GAPS, HOLES AND SHARP EDGES.
11. ALL INLETS SHALL BE DESIGNED AND INSTALLED SUCH THAT THE TOP OF PIPE ELEVATIONS MATCH AS MUCH AS POSSIBLE.

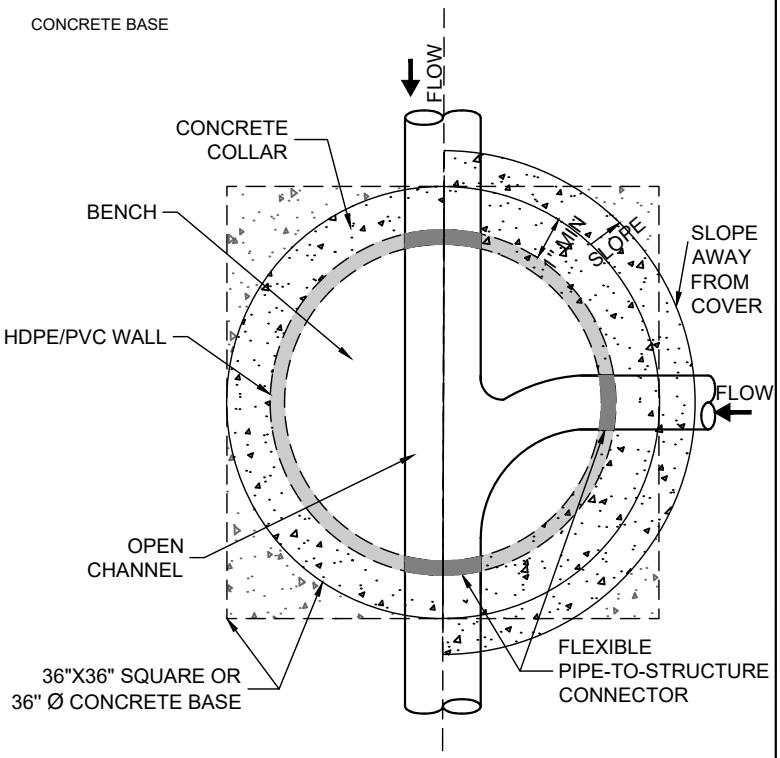

24" DIAMETER ACCESS

PLAN

REFERENCE:

12. COLLAR ADJUSTMENT TO GRADE PER DETAIL S-MH6.
13. STANDARD LOCKING MANHOLE FRAME AND COVER SHALL BE PER DETAIL S-MH8.

24" DIAMETER PVC/HDPE ACCESS STRUCTURE

REV. DATE: 06/2020 | DETAIL: S-MH4

APPROVED:

CITY ENGINEER

PUBLIC WORKS DIRECTOR

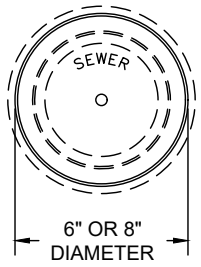

CLEANOUT COVER
PLAN

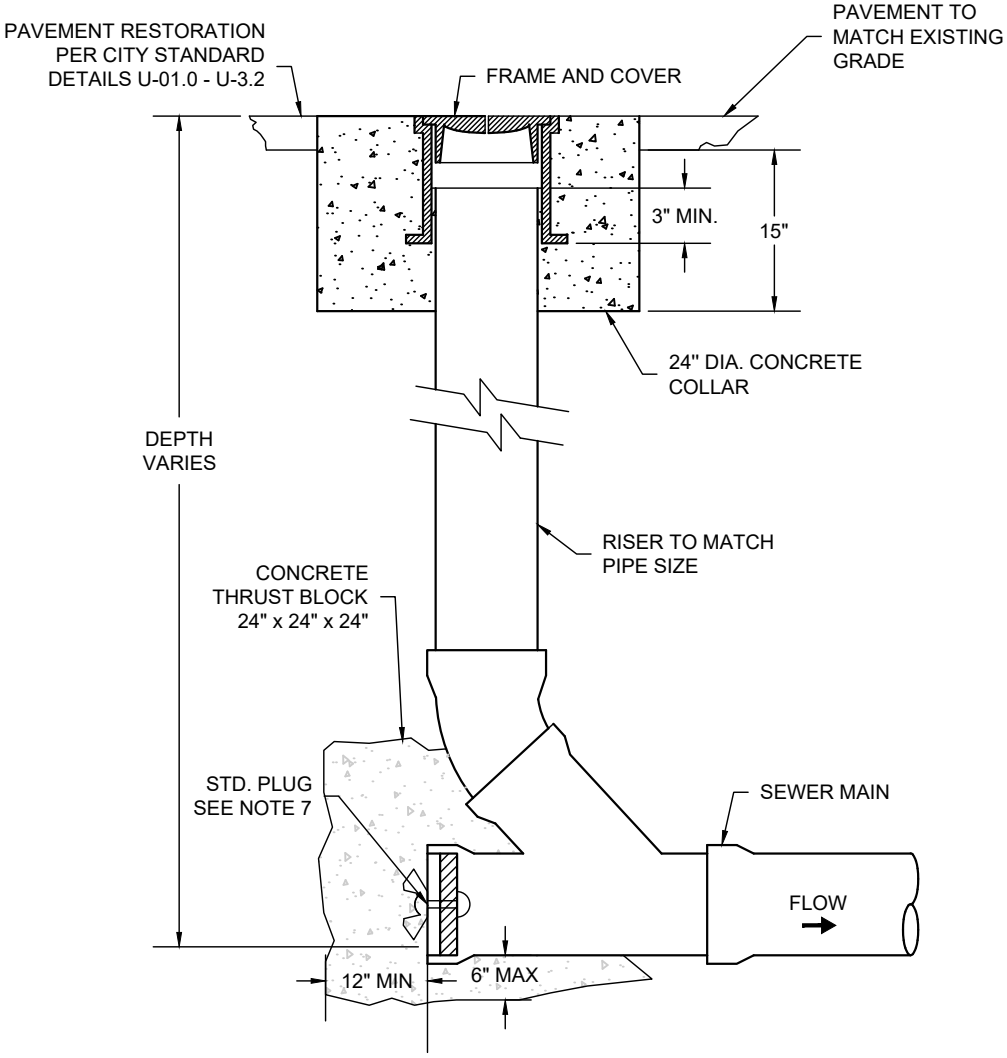

CLEANOUT
SECTION

NOTES:

1. APPLIES TO CLEANOUT REPLACEMENT AND ADJUSTMENT TO GRADE.
2. CLEANOUT LARGER THAN 8" DIAMETER SHALL BE SUBJECT TO APPROVAL.

MATERIALS

3. FRAME AND COVER IN PAVED AREA OR EASEMENTS SHALL BE SOUTHBAY FOUNDRY SBF-1240 OR EQUAL APPROVED BY THE ENGINEER.
4. ALL PIPE AND FITTINGS SHALL BE PVC SDR-35 PER ASTM 3034.
5. CONCRETE SHALL BE CLASS 520-C-3250.
6. STANDARD PLUG SHALL BE WING NUT STYLE (CHERNE ORIGINAL GRIPPER, OR APPROVED EQUAL).

CONSTRUCTION

7. SET FRAME AND COVER FLUSH WITH PAVEMENT GRADE, NOT TO EXCEED $\frac{1}{4}$" DIFFERENCE.

REFERENCE:

8. PAVEMENT RESTORATION SHALL MEET REQUIREMENTS IN CITY STANDARD DETAILS U-01.0 - U-3.2.

SEWER CLEANOUT

REV. DATE: 06/2020 | DETAIL: S-MH5

APPROVED:

CITY ENGINEER

PUBLIC WORKS DIRECTOR

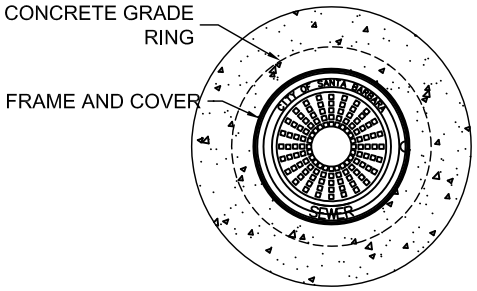

COLLAR ADJUSTMENT
PLAN

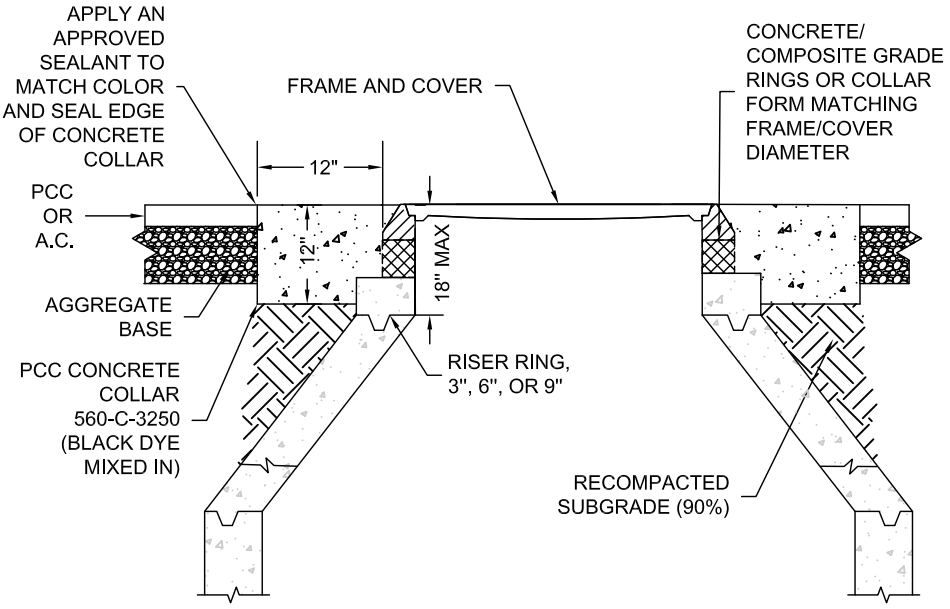

COLLAR ADJUSTMENT
PROFILE

NOTES:
1. GRADE RINGS SHALL NOT EXCEED A TOTAL MAXIMUM HEIGHT OF 12" FOR STANDARD MANHOLE INSTALLATIONS.

MATERIALS:
2. ALL CONCRETE SHALL BE 560-C-3250.
3. ALL MORTAR SHALL BE CLASS "D" PER SECTION 201.5.1 OF THE STANDARD SPECIFICATIONS FOR PUBLIC WORKS CONSTRUCTION.
4. SPACER BLOCKS SHALL MATCH MANHOLE'S CONSTRUCTION MATERIALS.
5. A THERMOPLASTIC MANHOLE RISER FORM MAY BE USED IN LIEU OF SPACER BLOCKS AND GRADE RINGS.

CONSTRUCTION:
6. PRIOR TO ANY WORK ON EXISTING SEWER MANHOLES, THE CONTRACTOR SHALL PLACE A TEMPORARY FALSE BOTTOM INSIDE OF THE MANHOLE. IF ONE CANNOT BE INSTALLED, THE CONTRACTOR SHALL NOTIFY THE CITY PRIOR TO COMMENCING WORK.
7. WHEN SPECIFIED, RUNGS SHALL BE REMOVED TO A DEPTH OF 2" BEYOND THE INSIDE FACE OF THE MANHOLE. EXISTING VOIDS LEFT BY THE REMOVAL OF THESE RUNGS SHALL BE FILLED WITH MORTAR OR A PATCHING CEMENT SUCH AS "WATER PLUG", OR EQUAL APPROVED BY THE ENGINEER.
8. FRAME SHALL BE INSTALLED LEVEL OR MATCH SURROUNDING GRADE AND BE SUPPORTED DURING CONCRETE CURING PROCESS.
9. TO RAISE AN EXISTING FRAME AND COVER ON A PRE-CAST CONCRETE SEWER MANHOLE, USE CONCRETE GRADE RINGS, COMPOSITE GRADE RINGS (PRO-RING BY CRETEX OR APPROVED EQUAL), OR A THERMOPLASTIC MANHOLE RISER FORM (MANUFACTURED BY WHIRLYGIG OR APPROVED EQUAL).
10. TO LOWER AN EXISTING FRAME AND COVER ON A PRE-CAST CONCRETE SEWER MANHOLE, REMOVE GRADE RINGS AND/OR RISER SHAFT UNITS. REPLACE THE EXISTING CONE WITH A PRECAST CONCRETE ECCENTRIC CONE UNIT IF THE EXISTING CONE IS EITHER CONCENTRIC, DETERIORATED, OR AS DIRECTED BY THE ENGINEER.
11. TO RAISE AN EXISTING FRAME AND COVER ON AN EXISTING BRICK SEWER MANHOLE, SEE NOTE 4 OR INSTALL A NEW MANHOLE AS DIRECTED BY THE ENGINEER.
12. LOWERING EXISTING BRICK SEWER MANHOLES: TO LOWER AN EXISTING FRAME AND COVER ON A BRICK SEWER MANHOLE, RESET THE FRAME AND COVER ON EXISTING BRICKS WITH MORTAR, REMOVE A SUFFICIENT AMOUNT OF BRICKS TO INSTALL A PRE-CAST CONCRETE ECCENTRIC CONE UNIT, OR INSTALL A NEW SEWER MANHOLE AS DIRECTED BY THE ENGINEER. DIAMETER OF CONE APERTURE SHALL MATCH THE DIAMETER OF THE FRAME AND COVER.
13. WHENEVER PRE-CAST CONCRETE COMPONENTS ARE TO BE PLACED ON ANY PART OF AN EXISTING BRICK MANHOLE, THESE COMPONENTS SHALL BE PLACED AND SECURED BY APPLYING MORTAR. THE DEPTH, WIDTH, AND THICKNESS OF THE MORTAR SHALL BE OF SUFFICIENT DIMENSIONS TO PROPERLY AND ADEQUATELY JOIN AND SECURE THE COMPONENTS.

REFERENCE:
14. STANDARD MANHOLE FRAME AND COVER SHALL BE INSTALLED PER DETAIL S-MH7 UNLESS OTHERWISE DIRECTED.
15. PAVEMENT RESTORATION SHALL MEET REQUIREMENTS IN CITY STANDARD DETAILS U-01.0 - U-3.2.

MANHOLE COLLAR AND ADJUSTMENT

REV. DATE: 06/2020 | DETAIL: S-MH6

APPROVED:

CITY ENGINEER

PUBLIC WORKS DIRECTOR

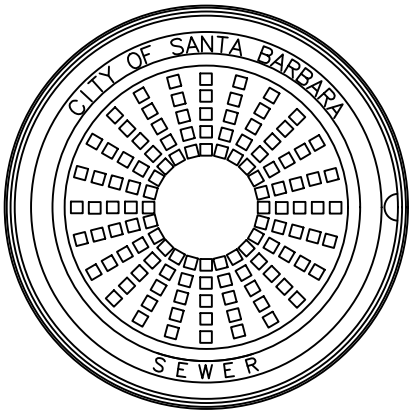

COVER
PLAN

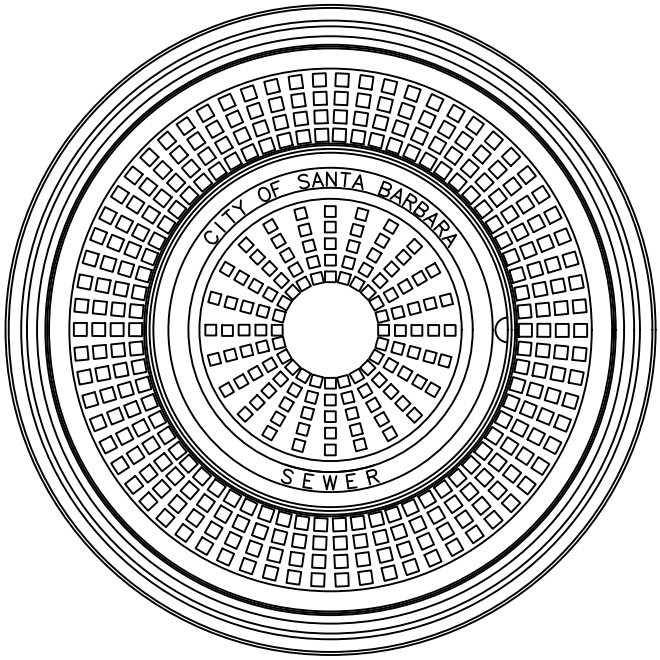

DUAL COVER
PLAN

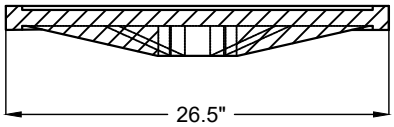

COVER
SECTION

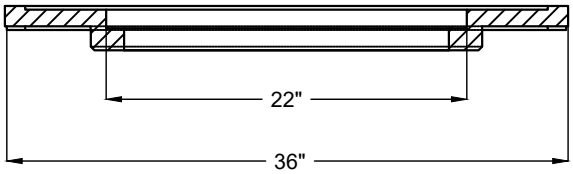

DUAL COVER
SECTION

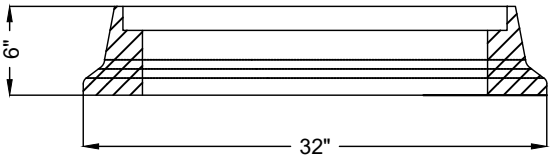

FRAME
SECTION

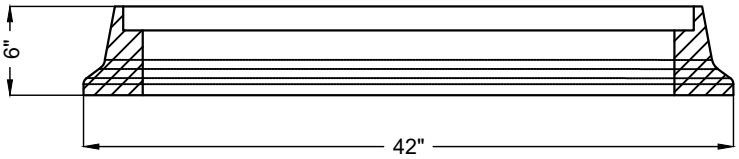

DUAL FRAME
SECTION

NOTES:

1. SINGLE 26.5" FRAME AND COVER SHALL BE USED ON 48" DIAMETER MANHOLES.
2. 36" / 22" DUAL FRAME AND COVER SHALL BE USED ON 60" DIAMETER MANHOLES.
3. WHEN ON DRIVABLE SURFACES MINIMUM LOADING SHALL FOLLOW AASHTO H20 STANDARDS. ENGINEER TO DETERMINE IF GREATER LOAD CAPACITY IS NEEDED.

MATERIALS:

4. DUAL OR SINGLE SEWER MANHOLE FRAME AND COVER SHALL BE MANUFACTURED BY SOUTH BAY FOUNDRY (MODEL # SBF 1325 / 1310) OR APPROVED EQUAL.
5. WHEN RIM TO GRADE EXCEEDS 6", A LOCKING COMPOSITE MANHOLE FRAME AND COVER MANUFACTURED BY EJ COMPOSITES OR APPROVED EQUAL MAY BE SPECIFIED AT DISCRETION OF ENGINEER.

CONSTRUCTION:

6. MANHOLE COVERS TO BE DESIGNATED "CITY OF SANTA BARBARA SEWER" IN CASTING OR STAINLESS STEEL IDENTIFYING PLATE

REFERENCE:

7. FOR STANDARD MANHOLE STRUCTURES, SEE S-MH1 AND S-MH2.

MANHOLE FRAMES AND COVERS

REV. DATE: 06/2020 | DETAIL: S-MH7

APPROVED:

CITY ENGINEER

PUBLIC WORKS DIRECTOR

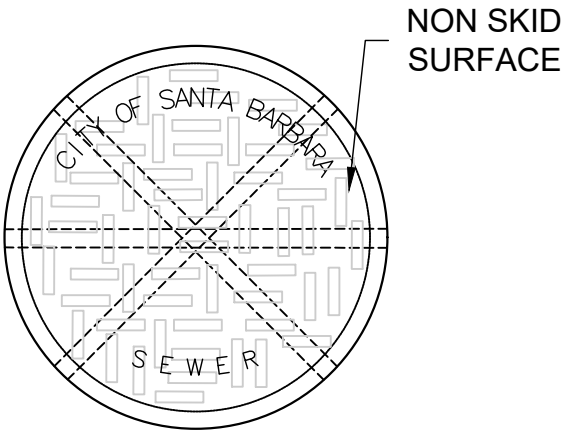

CAST IRON COVER

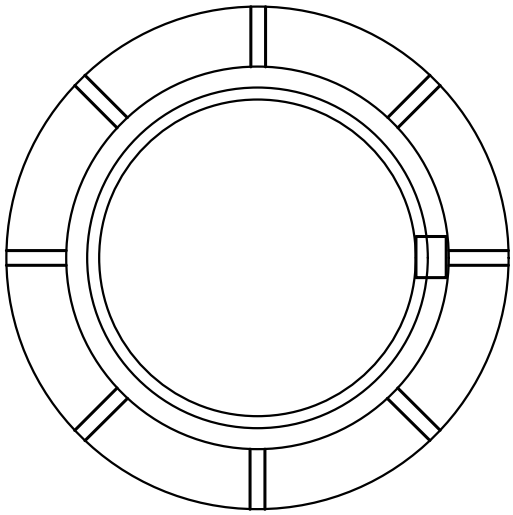

FRAME
PLAN

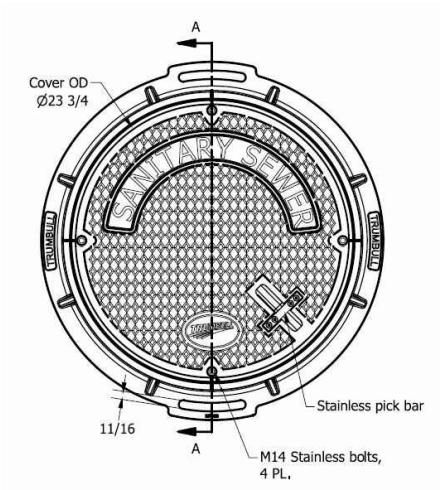

COMPOSITE FRAME AND COVER

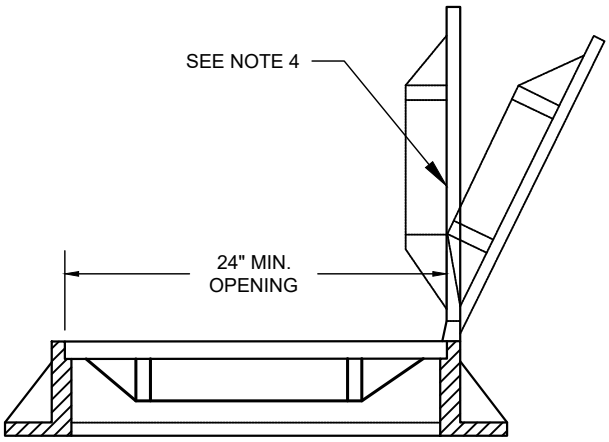

FRAME & COVER
PROFILE

NOTES:

1. TO BE USED ON 24" DIAMETER ACCESS STRUCTURE (S-MH4) OR MANHOLES IN EASEMENT.
2. WHEN ON DRIVABLE SURFACES MINIMUM LOADING SHALL FOLLOW AASHTO H20 STANDARDS. ENGINEER TO DETERMINE IF GREATER LOAD CAPACITY IS NEEDED.
3. COMPOSITE FRAME AND COVER SET SHALL BE USED WHEN RIM ELEVATION IS ABOVE GRADE.

MATERIALS:

4. CAST IRON LOCKING MANHOLE FRAME AND COVER SHALL BE PAMREX MODEL #CDPA60EHSSE 24" WITH 316 STAINLESS STEEL LOCKING KIT OR APPROVED EQUAL.
5. COMPOSITE LOCKING MANHOLE FRAME AND COVERS SHALL BE TRUMBULL MODEL 367-5790/367-5468, EJ COMPOSITES 2600 SERIES WITH 316 STAINLESS STEEL LOCKING KIT OR APPROVED EQUAL.

CONSTRUCTION:

6. HINGE TO BE LOCATED ON SIDE OF ONCOMING TRAFFIC. OPENS TO 130 DEGREES, BLOCKS AT 90 DEGREES WHEN CLOSING.
7. LOCKING KIT TO BE ACTIVATED BY AN ASYMMETRIC FIVE-SIDED BOLT HEAD OR RANGER LOCK.
8. MANHOLE COVERS TO BE DESIGNATED "CITY OF SANTA BARBARA SEWER" IN CASTING OR APPROVED STAINLESS STEEL IDENTIFYING PLATE.

REFERENCE:

9. FOR SHALLOW ACCESS STRUCTURES, SEE S-MH3 AND S-MH4.

LOCKING MANHOLE FRAME AND COVER

REV. DATE: 06/2020 | DETAIL: S-MH8

APPROVED:

CITY ENGINEER

PUBLIC WORKS DIRECTOR

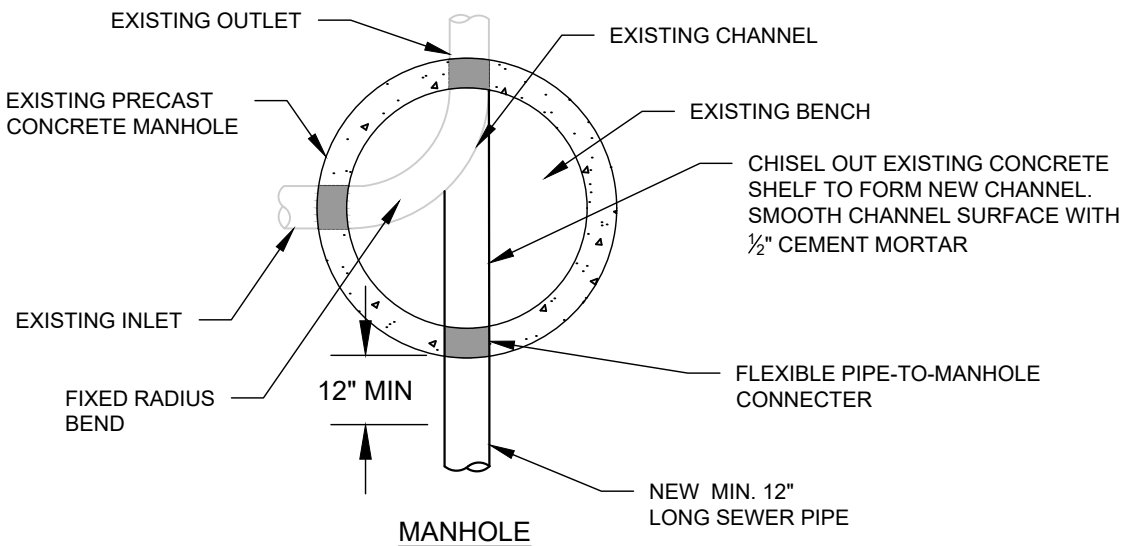

MANHOLE
PLAN

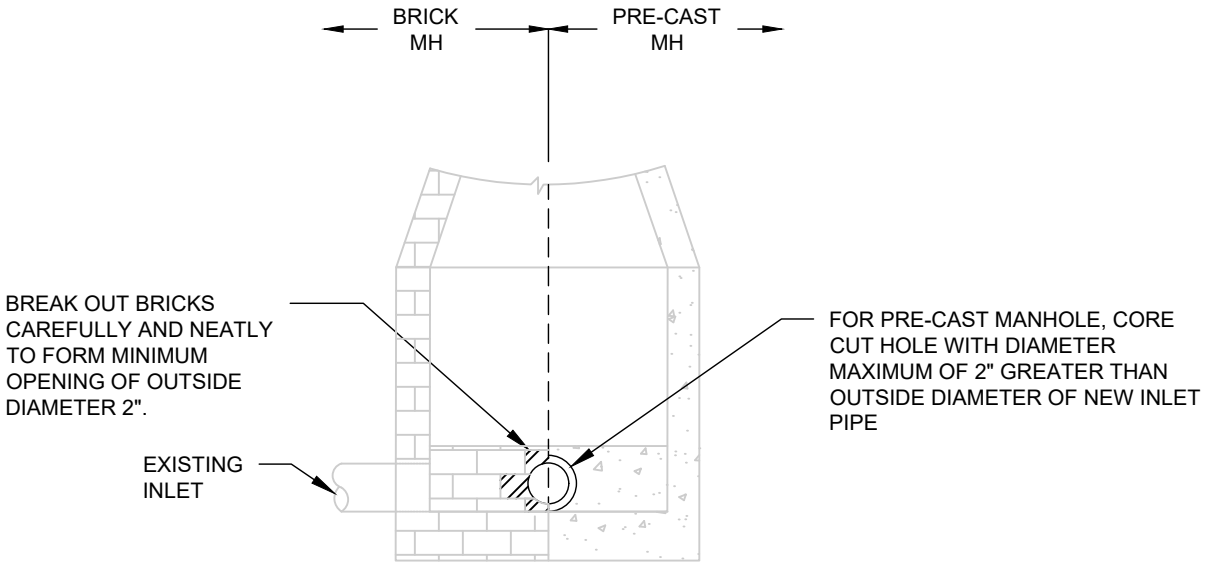

MANHOLE
PROFILE

NOTES:
1. IF BRICK MANHOLE, BREAK OUT BRICKS REQUIRED TO OPEN CONNECTION.
2. INVERT ELEVATION OF NEW CONNECTION AT THE INSIDE FACE OF MANHOLE TO BE AT LEAST 0.10 FEET HIGHER THAN EXISTING OUTLET INVERT ELEVATION.
3. IF PRE-CAST MANHOLE, MAKE CORE CUT WITH EQUIPMENT SPECIALLY DESIGNED TO CUT A SMOOTH HOLE WITHOUT DAMAGE TO THE REINFORCING STEEL OR STRUCTURE.

MATERIALS:
4. KOR-N-SEAL BOOTS OR APPROVED EQUAL TO BE INSTALLED AROUND PIPE.
5. ALL PIPE AND FITTINGS SHALL BE PVC SDR-35 PER ASTM 3034.

CONSTRUCTION:
6. PIPE STUBS SHALL BE 12" MINIMUM LENGTH FROM OUTSIDE OF MANHOLE WALL, UNLESS OTHERWISE DIRECTED BY THE CITY ENGINEER.

REFERENCE:
7. FOR INTERNAL/EXTERNAL DROPS SEE S-MH13 OR S-MH14

CONNECTION TO EXISTING MANHOLE

REV. DATE: 06/2020 | DETAIL: S-MH9

APPROVED:

CITY ENGINEER

PUBLIC WORKS DIRECTOR

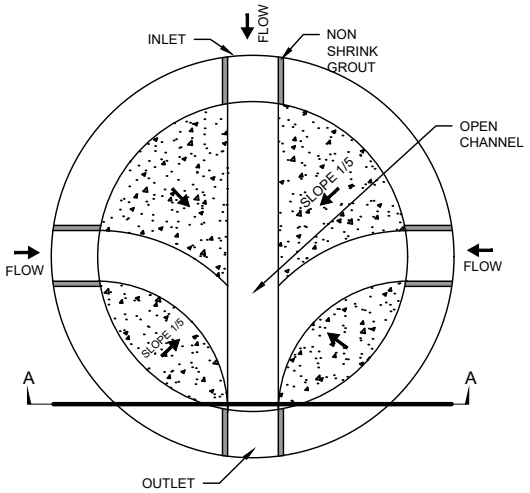

MANHOLE BASE A
PLAN

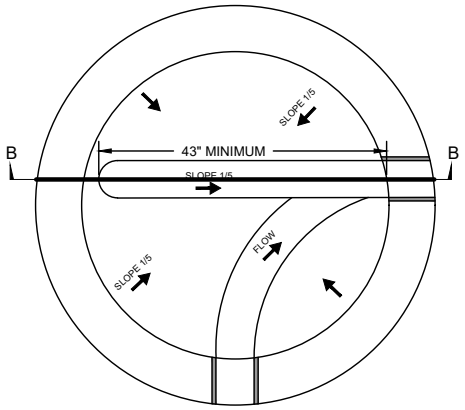

MANHOLE BASE B
PLAN

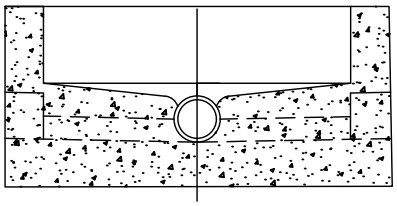

MANHOLE BASE A
SECTION A-A

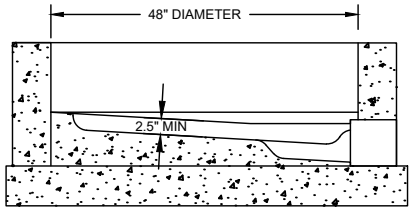

MANHOLE BASE B
SECTION B-B

NOTES:

1. BASE B APPLIES WHEN END OF LINE MANHOLE OR SINGLE INLET/SINGLE OUTLET CONDITION, OTHERWISE BASE A APPLIES.
2. CAMERA CHANNEL REQUIRED FOR ALL 6", 8", AND 10" COLLECTORS FOR OFF-SETS BETWEEN 80 AND 100 DEGREES.

MATERIALS:

3. BASE SHALL BE BEDDED ON A MINIMUM OF 6" OF WELL GRADED, $\frac{3}{4}$" ANGULAR CRUSHED ROCK OVER NATIVE MATERIAL THAT IS EITHER UNDISTURBED OR COMPACTED PER GREENBOOK STANDARDS, WITH A RELATIVE COMPACTION ≥ 95%

CONSTRUCTION:

4. BENCH AND CHANNEL SHALL BE COMPLETED IN A SINGLE POUR USING CLASS 560-C-3250 CONCRETE WITH STEEL TROWEL FINISH.
5. ANY CHANGE IN DIRECTION SHALL BE A FIXED RADIUS CURVE EXTENDING FROM THE INLET WALL TO THE OUTLET WALL.
6. INSIDE SURFACE OF INVERT AND AREA BETWEEN PIPE CONNECTION AND CHANNEL SHALL BE FREE FROM GAPS, HOLES AND SHARP EDGES.
7. ALL INLETS SHALL BE DESIGNED AND INSTALLED SUCH THAT THE TOP OF PIPE ELEVATIONS AND INVERTS MATCH AS MUCH AS POSSIBLE.

REFERENCE:

N/A

CAST IN PLACE MANHOLE BASE

REV. DATE: 06/2020 | DETAIL: S-MH10

APPROVED:

CITY ENGINEER

PUBLIC WORKS DIRECTOR

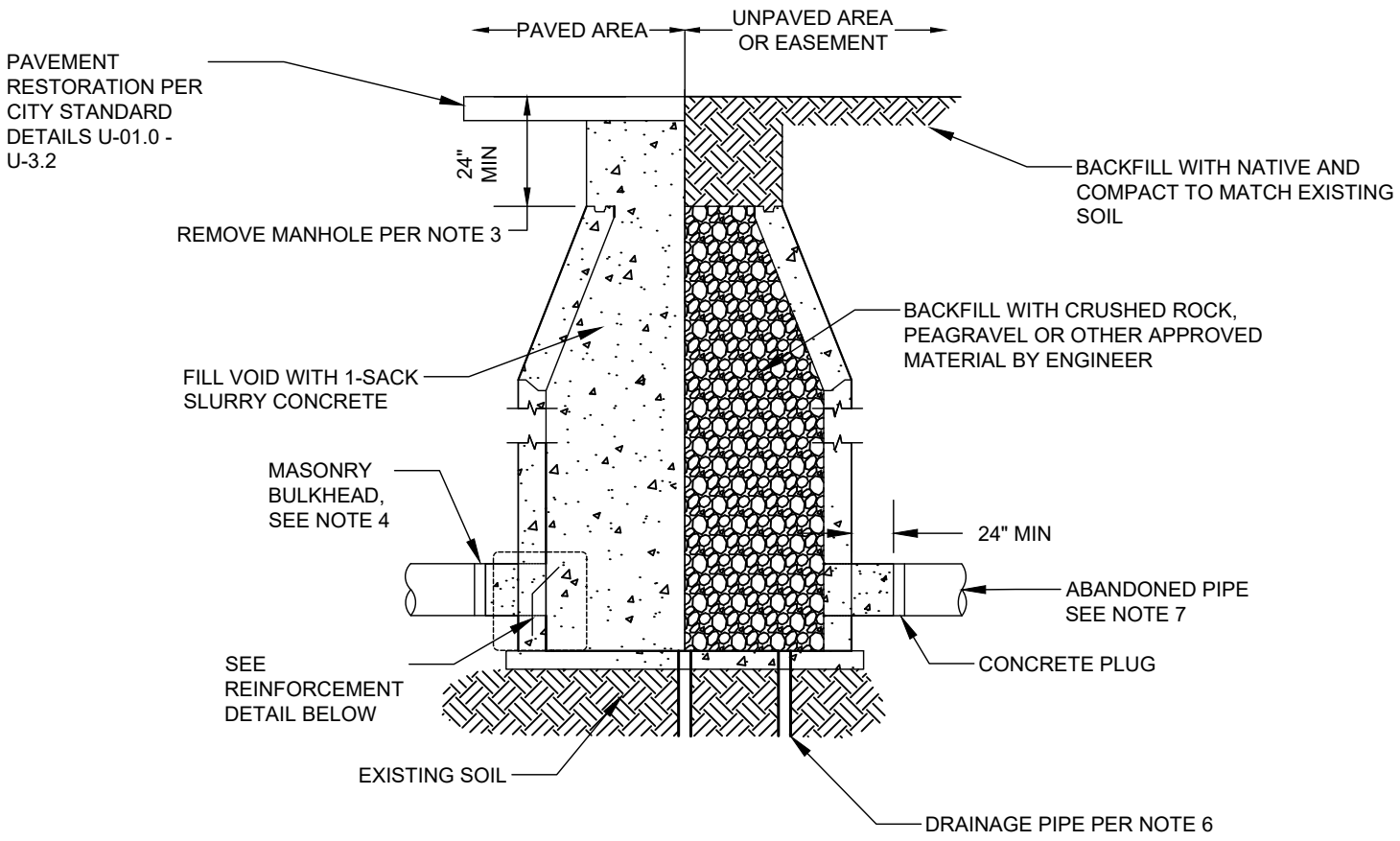

MANHOLE ABANDONMENT

SECTION

NOTES:

1. N/A

MATERIALS:

2. CONCRETE PLUG SHALL BE CLASS 520-C-3250.

CONSTRUCTION:

3. REMOVE MANHOLE TO MIN. 24" BELOW FINISHED GRADE. SALVAGE FRAME, COVER AND CONCRETE GRADE RINGS AND DELIVER TO THE CITY YARD.
4. FOR SEWERS 18" AND LARGER, PROVIDE MASONRY BULKHEAD IN LIEU OF CONCRETE PLUG.
5. PLUG WITH SUITABLE MATERIAL TO HOLD CONCRETE OR GRAVEL.
6. INSTALL THREE, EQUALLY SPACED, 2" DIAMETER DRAINAGE IN THE CONCRETE BASE WHEN ABANDONING MANHOLE IN UNPAVED AREAS.

REFERENCE:

7. SEE S-MH12 FOR PIPE ABANDONMENT.
8. PAVEMENT RESTORATION SHALL MEET REQUIREMENTS IN CITY STANDARD DETAILS U-01.0 - U-3.2.

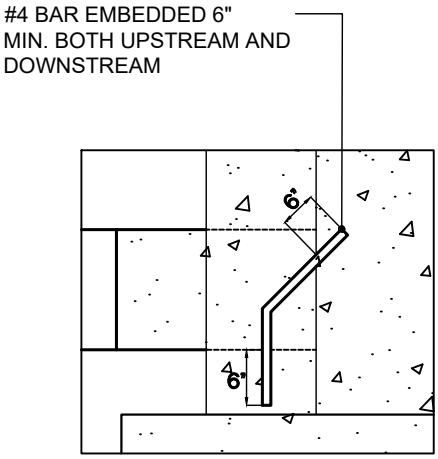

REINFORCEMENT

DETAIL

MANHOLE ABANDONMENT

REV. DATE: 06/2020 | DETAIL: S-MH11

APPROVED:

CITY ENGINEER

PUBLIC WORKS DIRECTOR

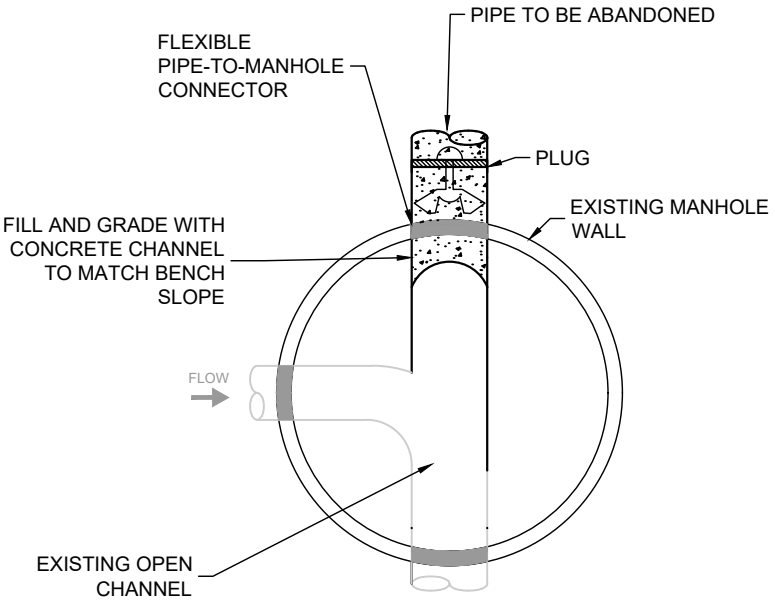

MANHOLE
PLAN

NOTES:

1. FOR SEWERS LESS THAN OR EQUAL TO 15" DIAMETER, ABANDON SEWER AS SHOWN.
2. FOR SEWERS GREATER THAN 15" DIAMETER, CONSULT WITH THE ENGINEER.
3. ENCLOSED OR PARTIALLY ENCLOSED SPACES SHALL BE CITY ENFORCED AND CONSIDERED PERMIT-REQUIRED CONFINED SPACES UNTIL THE PRE-ENTRY PROCEDURES DEMONSTRATE OTHERWISE.

MATERIALS:

4. CONCRETE PLUG SHALL BE CLASS 520-C-2500.

CONSTRUCTION:

5. RESHAPE AND FILL EXISTING CHANNEL TO PROVIDE SMOOTH CONTOUR BETWEEN INCOMING AND OUTGOING PIPES.

REFERENCE:

6. SEE S-MH11 FOR MANHOLE ABANDONMENT.

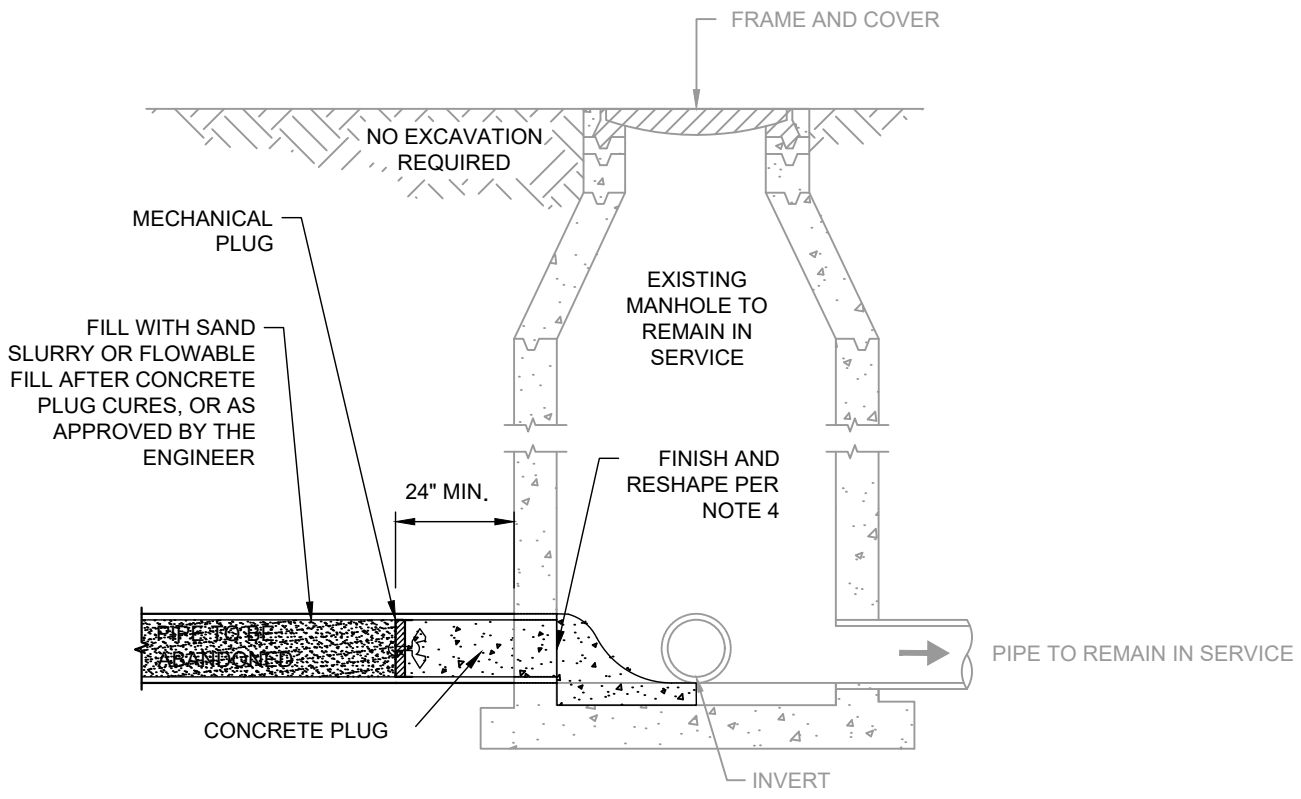

MANHOLE
PROFILE

ABANDONMENT OF SEWER PIPE

REV. DATE: 06/2020 | DETAIL: S-MH12

APPROVED:

CITY ENGINEER

PUBLIC WORKS DIRECTOR

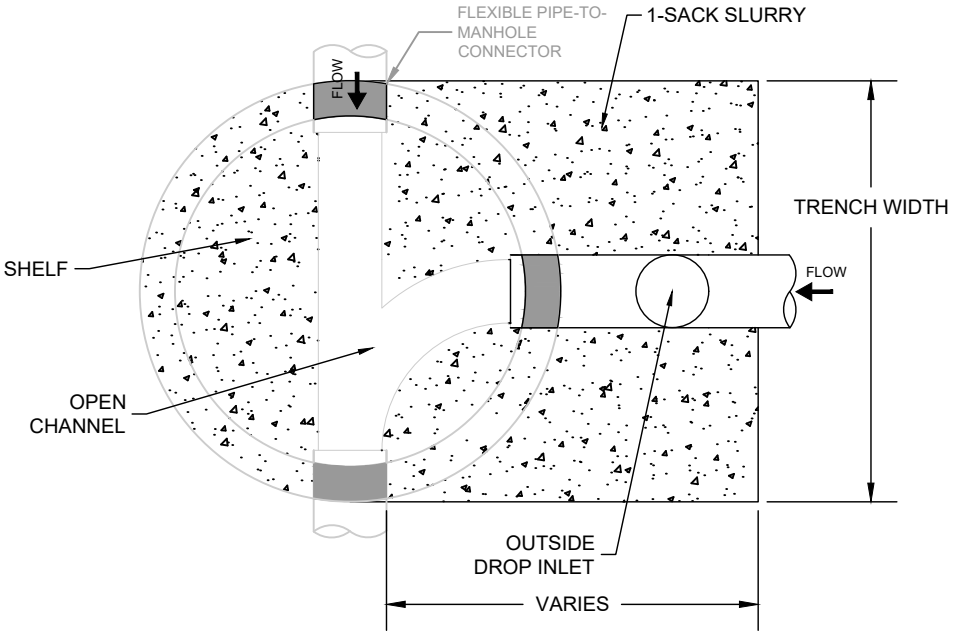

MANHOLE
PLAN

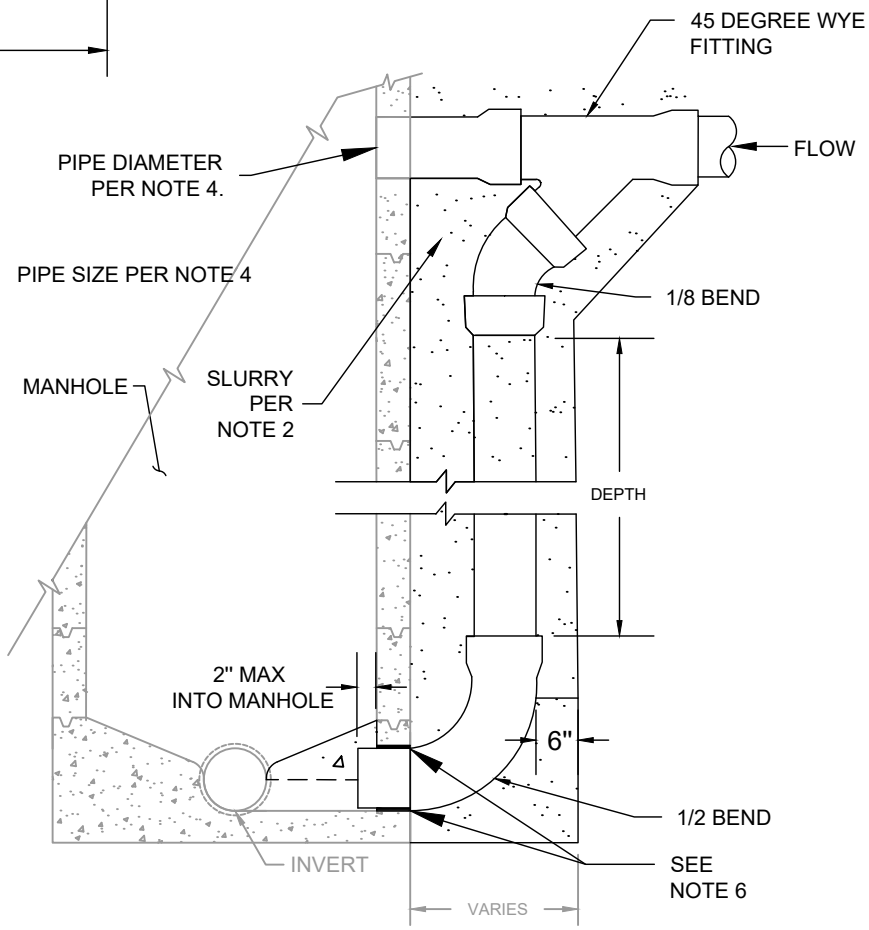

OUTSIDE DROP INLET
SECTION

NOTES:
1. OUTSIDE DROP SEWER CONNECTION TO BE USED AS DETERMINED BY THE ENGINEER.
2. SLURRY TO FINISH FLUSH TO STRUCTURE WALL.

MATERIALS:
3. ALL PIPE AND FITTINGS SHALL BE PVC SDR-35 PER ASTM 3034.

CONSTRUCTION:
4. CONNECTOR PIPE SHALL BE OF SAME DIAMETER AS SEWER PIPE.
5. TO FIT AS CLOSE AS POSSIBLE TO MANHOLE WALL.
6. SEAL DROP PENETRATION WITH NON-SHRINK GROUT OR WATERSTOP.

REFERENCE:
7. EXCEPT AS MODIFIED BY THIS DETAIL, MANHOLE TO CONFORM TO DETAIL S-MH1 OR S-MH2.

OUTSIDE DROP INLET CONNECTION

REV. DATE: 06/2020 | DETAIL: S-MH13

APPROVED:

CITY ENGINEER

PUBLIC WORKS DIRECTOR

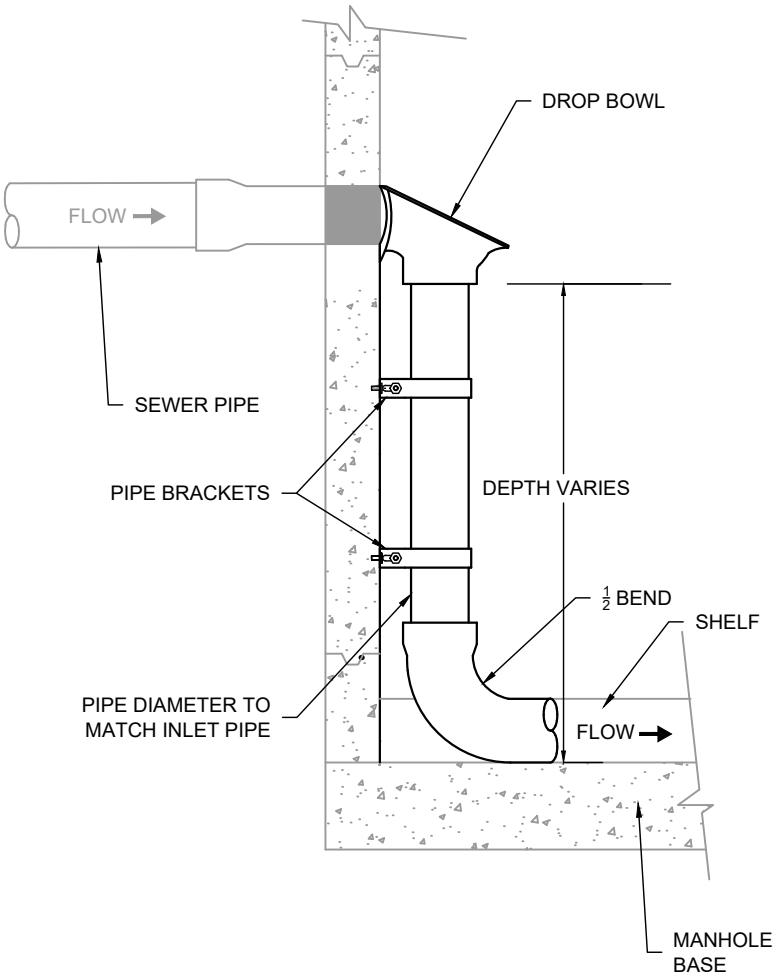

INSIDE DROP INLET
PROFILE

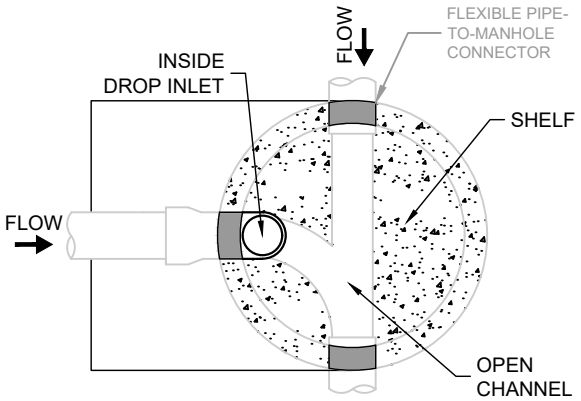

MANHOLE
PLAN

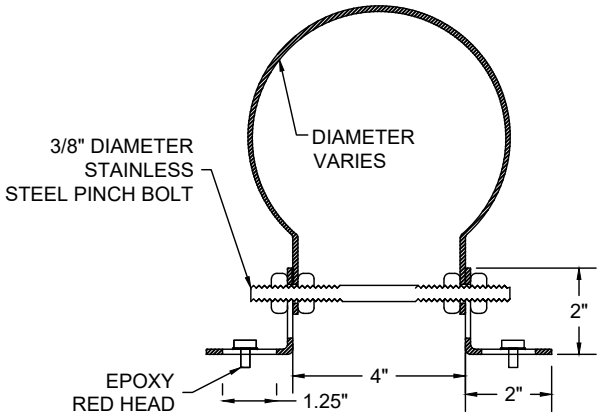

PIPE BRACKET
DETAIL

NOTES:

1. TO BE USED ON NEW CONSTRUCTION OR WHEN EXTERNAL DROP IS TO BE ABANDONED.
2. NOT RECOMMENDED FOR USE IN AREAS WITH HIGH HYDROGEN SULFIDE OR HIGH FLOW / VELOCITY.

MATERIALS:

3. CONNECTOR PIPE SHALL BE OF SAME DIAMETER AS SEWER PIPE.
4. ALL PIPE AND FITTINGS SHALL BE PVC SDR-35 PER ASTM 3034.
5. DROP BOWL SHALL BE TYPE "A" OR "B" TO MATCH SEWER PIPE SIZE AND CLAMPING BRACKET SYSTEM AS MANUFACTURED BY RELINER-DURAN, INC. OR APPROVED EQUAL. ALL MECHANICAL COMPONENTS SHALL BE 316 SS.
6. CONSTRUCTION:
7. STANDARD BRACKET SIZES TO FIT 6" AND 8" PVC SEWER PIPE SDR-35 AND SPACED EVERY 4 FEET.

REFERENCE:

8. SEE S-MH1 AND S-MH2 FOR MANHOLE CONSTRUCTION DETAILS.

INSIDE DROP INLET CONNECTION

REV. DATE: 06/2020 | DETAIL: S-MH14

APPROVED:

CITY ENGINEER

PUBLIC WORKS DIRECTOR

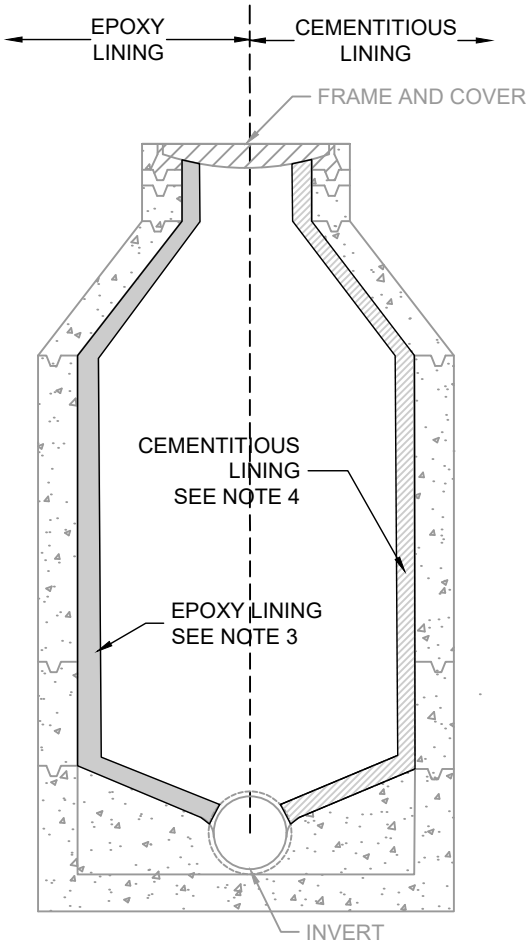

MANHOLE LINING
PROFILE

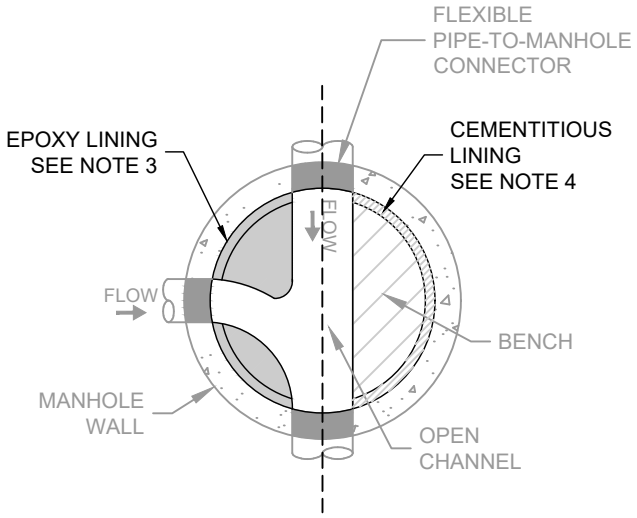

MANHOLE LINING
PLAN

NOTES:

1. FOR CALCULATION PURPOSES, ASSUME GROUNDWATER IS AT ROAD/GROUND SURFACE.
2. WHEN SPECIFIED, EPOXY MAY BE REQUIRED IN ADDITION TO CEMENTITIOUS LINING.

MATERIALS:

3. EPOXY LINING MATERIAL PROPERTIES SHALL MEET OR EXCEED 6,000 PSI TENSILE STRENGTH, 10,000 PSI COMPRESSIVE STRENGTH, AND 11,000 PSI FLEXURAL STRENGTH AND SHALL BE WARREN ENVIRONMENTAL OR APPROVED EQUAL.
4. CEMENTITIOUS LINING SHALL BE "ECOCAST" MANUFACTURED BY IPR OR APPROVED EQUAL.

CONSTRUCTION:

5. APPROVED LINING METHOD SHALL BE INSTALLED PER MANUFACTURER'S RECOMMENDATION AND BY A CERTIFIED INSTALLER.
6. ANY EXISTING LADDER RUNGS SHALL BE GROUND BACK TO 2" PAST FACE OF MANHOLE WALL.
7. REPAIR ANY DAMAGE TO CONCRETE PRIOR TO APPLYING COATING.
8. DURING PREPARATION OF THE STRUCTURE, ANY ACTIVE INFILTRATION SHALL BE PLUGGED USING AN ACRYLIC OR POLYURETHANE GROUT.
9. MANHOLE SHALL BE CLEAN OF ROOTS, GREASE, DEBRIS, PRESSURE WASHED, AND DRY PRIOR TO EPOXY LINING FOR MAXIMUM ADHERENCE TO MANHOLE WALL.
10. IF INTERNAL DROP IS PRESENT IN MANHOLE, REMOVE PRIOR TO LINING AND REINSTALL AFTER LINING IS COMPLETE.
11. EPOXY LINING SHALL BE SPARK AND PULL TESTED PER ASTM D4541 AND REPAIRED 2" PAST EDGE OF SCORE AND RESULTS OF TESTING SHALL BE SUBMITTED TO PUBLIC WORKS INSPECTOR FOR REVIEW.
12. OVERLAP MINIMUM 2" INTO FRAME AND COVER, EXISTING PIPE PENETRATIONS UNLESS OTHERWISE DIRECTED BY ENGINEER.

REFERENCE:

13. MANHOLE SHALL BE CONSTRUCTED PER DETAIL S-MH1, S-MH2, OR S-MH3.
14. STANDARD MANHOLE FRAME AND COVER SHALL BE CONSTRUCTED PER DETAIL S-MH7 OR S-MH8.

MANHOLE COATING AND LINING SYSTEMS

REV. DATE: 06/2020 | DETAIL: S-MH15

APPROVED:

CITY ENGINEER

PUBLIC WORKS DIRECTOR

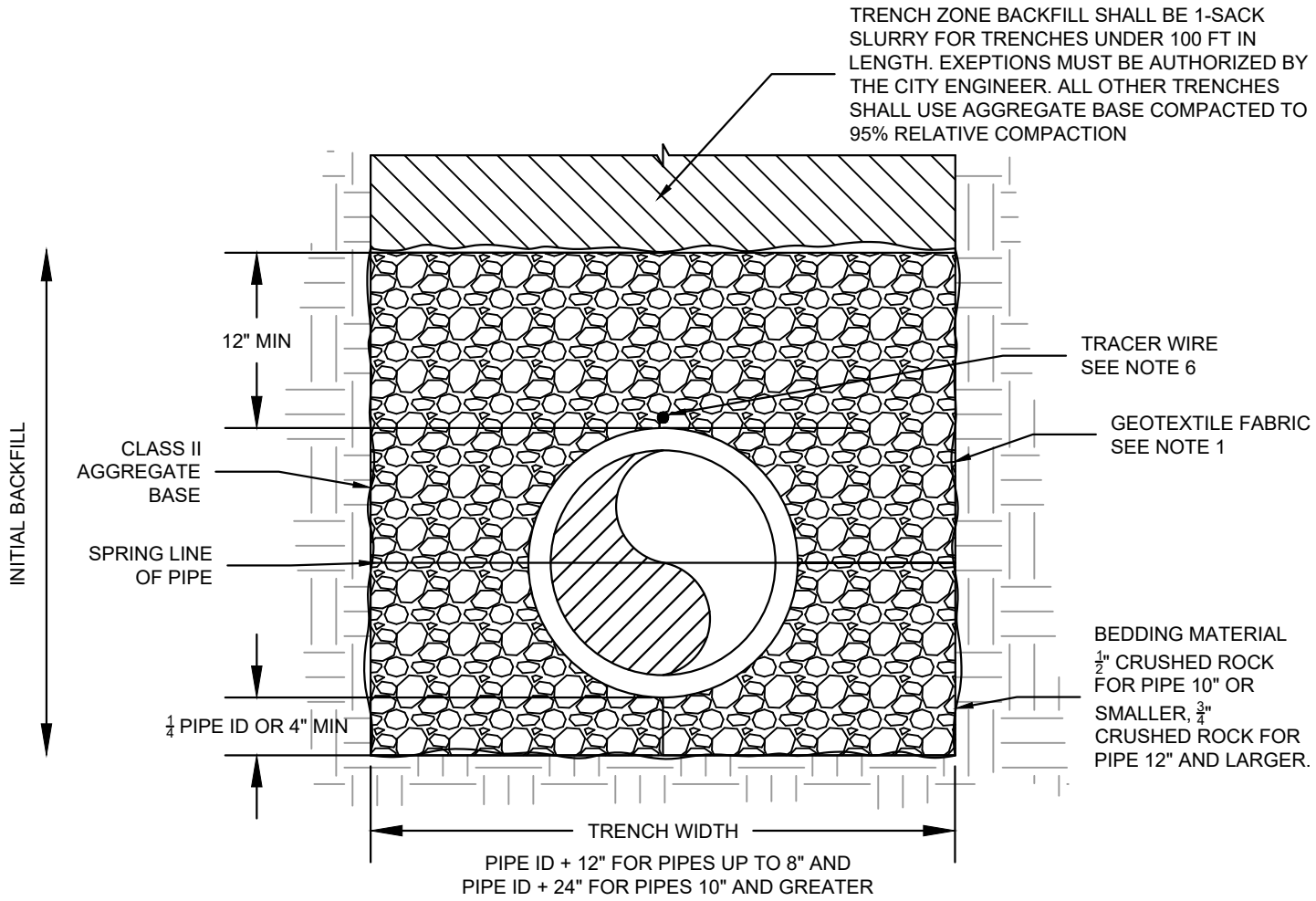

RIGID AND FLEXIBLE SEWER PIPE BEDDING

SECTION

NOTES:

1. IN AREAS WHERE NORMAL GROUNDWATER LEVELS ARE ABOVE CROWN OF PIPE, ENCASE INITIAL BACKFILL WITH GEOTEXTILE FABRIC MIN. 18" OVERLAP.

MATERIALS:

2. BEDDING FOR RIGID PIPES SHALL CONFORM TO ASTM C12-81 OR APPROVED EQUAL. BEDDING FOR FLEXIBLE PIPES SHALL CONFORM TO ASTM D2321-74 OR APPROVED EQUAL.
3. HAUNCHING FOR BOTH RIGID AND FLEXIBLE PIPE MUST BE COMPACTED TO A RELATIVE DENSITY > 70% OF SELECT MATERIAL. HEIGHT OF THE COMPACTED SOIL SHALL BE 0.37 O.D. FOR RIGID PIPE OR 0.7 O.D. FOR FLEXIBLE PIPE.
4. MOST SOILS MAY BE USED UNDER THE BEDDING EXCEPT FOR THOSE WITH ROCK PARTICLES GREATER THAN 18", AND SOILS WITH PEAT OR OTHER ORGANIC MATERIALS.
5. FOR NEW INSTALLATION OF NON-METALIC ONLY SEWER PIPES: A 12 GAUGE INSULATED COPPER TRACER WIRE. WRAP AROUND EACH SERVICE FOR DIRECT CONTACT. SECURE WIRE ON PIPE BY TAPING AROUND PIPE EVERY 10 FEET.

CONSTRUCTION:

6. PROVIDE SUITABLE FOUNDATION AS REQUIRED BY THE ENGINEER IN AREAS OF UNSTABLE TRENCH BOTTOM, WET CONDITIONS, OVER-EXCAVATION, ROCKY TRENCH BOTTOM ELSEWHERE AS DIRECTED BY THE ENGINEER.
7. TRENCH WALL SUPPORT SHALL CONFORM TO CURRENT OSHA REQUIREMENTS.
8. BACKFILL SHALL BE CAREFULLY PLACED TO ENSURE ALL EXCAVATED VOIDS AND HAUNCH AREAS ARE FILLED AND PROVIDE UNIFORM SUPPORT. COMPACT TO 95% RELATIVE COMPACTION.
9. PIPE ZONE COMPACTED TO 95% RELATIVE COMPACTION PER ASTM D1557.
10. DETECTABLE TAPE TO BE PLACED A MINIMUM OF 6" TO A MAXIMUM OF 12" BELOW THE STRUCTURAL ROAD SECTION.

REFERENCE:

11. SAWCUTTING DETAILS AND TRENCH PAVING SHALL MEET REQUIREMENTS IN CITY STANDARD DETAIL U-3.0 THROUGH 3.2

SEWER PIPE BEDDING, HAUNCH SUPPORT AND BACKFILL

REV. DATE: 06/2020 | DETAIL: S-SP1

APPROVED:

CITY ENGINEER

PUBLIC WORKS DIRECTOR

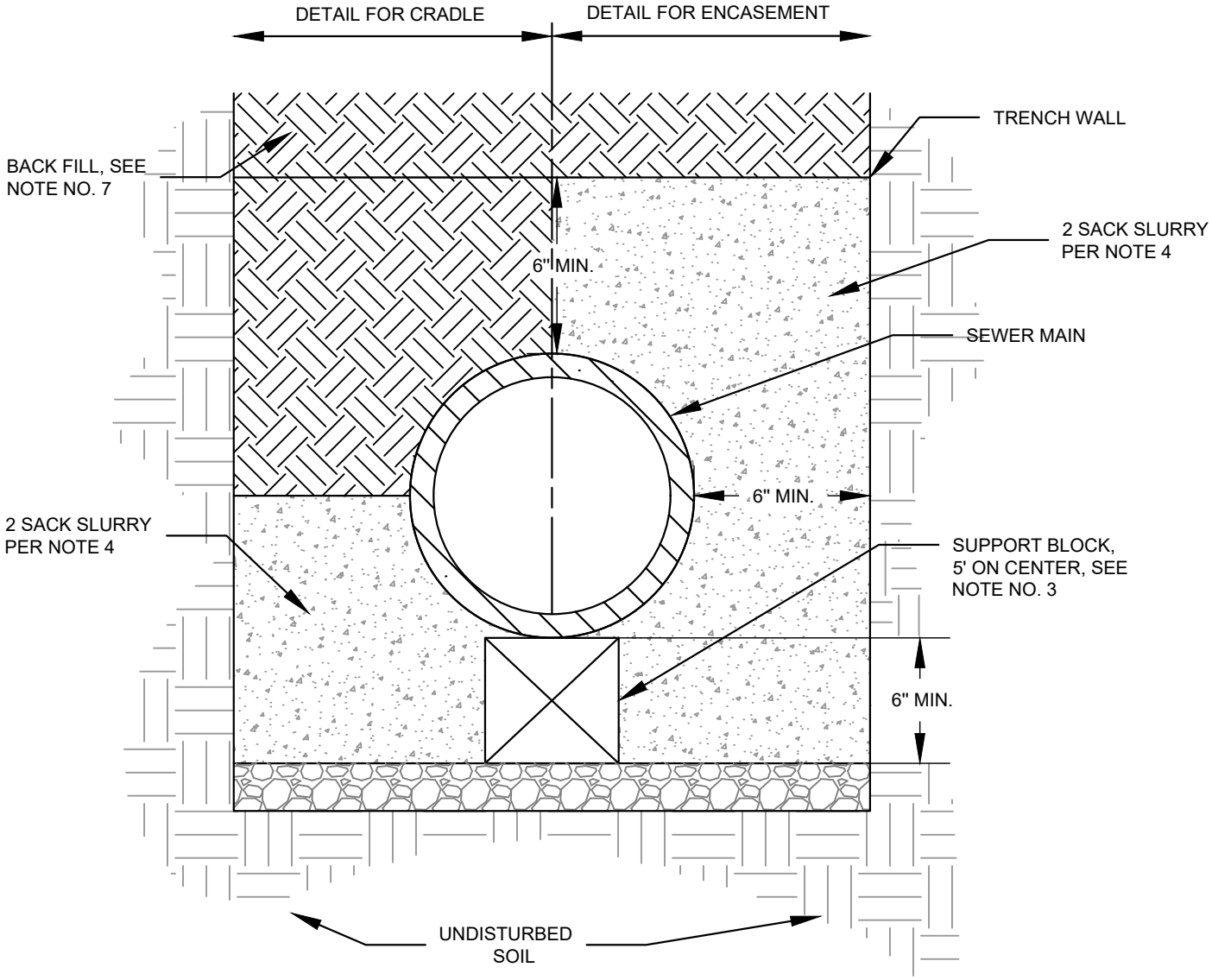

MAIN CRADLE AND ENCASEMENT

SECTION

NOTES

1. PIPE SHALL BE ENCASED WITH 2-SACK SLURRY WHEN LESS THAN 36" COVER. CRADLE DETAIL SHALL BE USED AS DIRECTED BY THE ENGINEER WHEN THE TRENCH WIDTH AT THE UPPER LIMIT OF THE PIPE ZONE EXCEEDS THE MAX WIDTH SPECIFIED BY PIPE MANUFACTURER.

MATERIALS:

2. FLEXIBLE PIPE MATERIALS SUCH AS HDPE MAY REQUIRE ENCASEMENT, AS DIRECTED BY THE ENGINEER.
3. SUPPORT BLOCKS MAY BE CONCRETE BLOCK OR BRICK.

CONSTRUCTION:

4. CRADLE AND ENCASEMENT TO BE PLACED ON $\frac{3}{4}$" CRUSHED ROCK, OR AS DIRECTED BY THE ENGINEER.

REFERENCE:

5. REFER TO S-SP1, U-01.0 AND U-01.1 FOR SPECIFICATIONS OF TRENCHING, BACKFILLING AND COMPACTING OF PIPELINE TRENCHES.

	CONCRETE CRADLE AND ENCASEMENT	REV. DATE: 06/2020	DETAIL: S-SP2
		APPROVED: CITY ENGINEER	
		PUBLIC WORKS DIRECTOR	

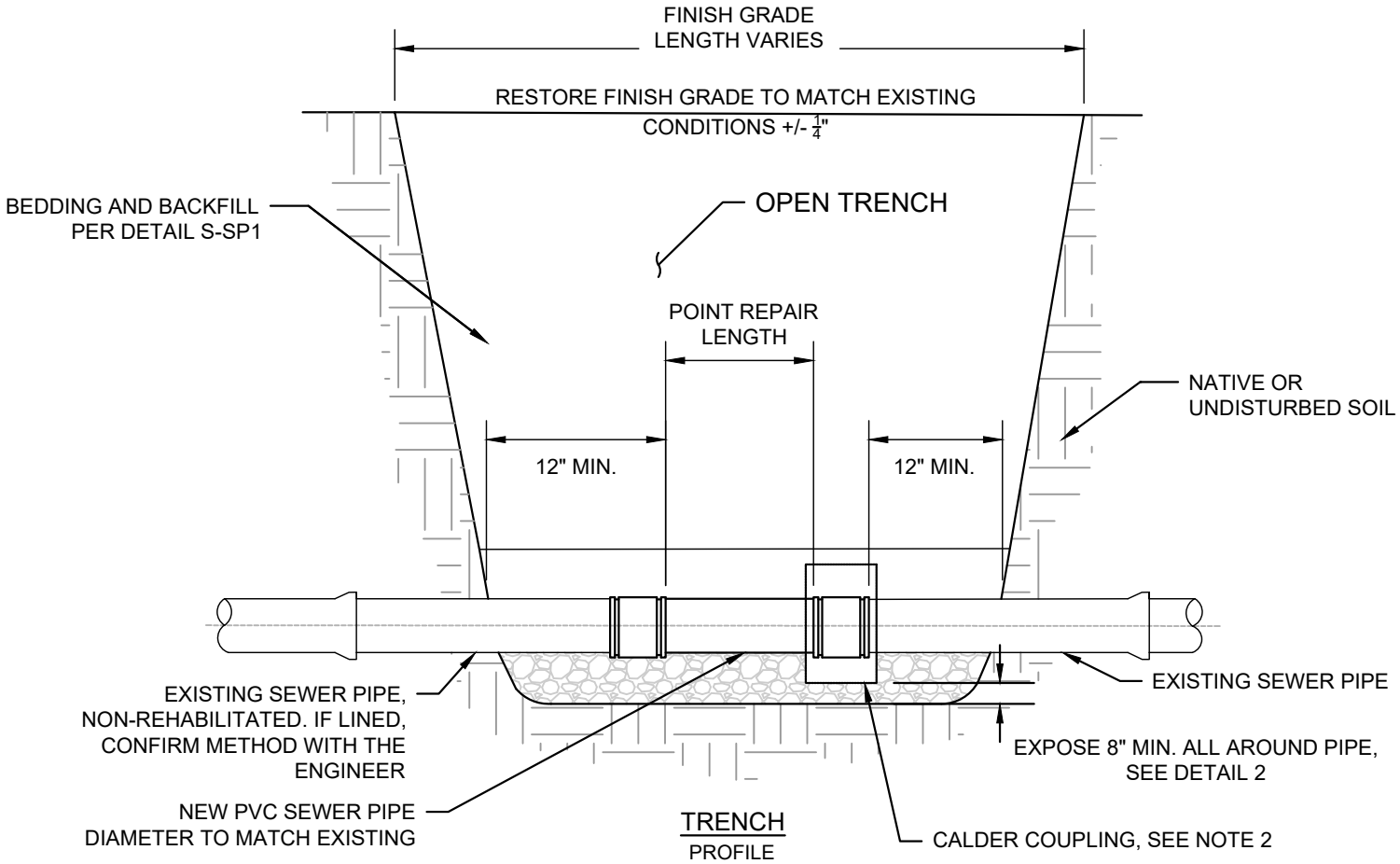

TRENCH
PROFILE

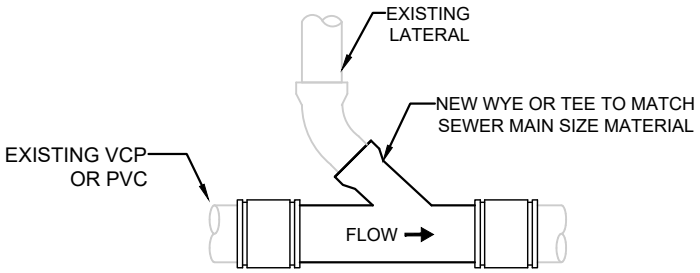

NEW OR REPLACED CONNECTION
(WYE OR TEE)
DETAIL 1

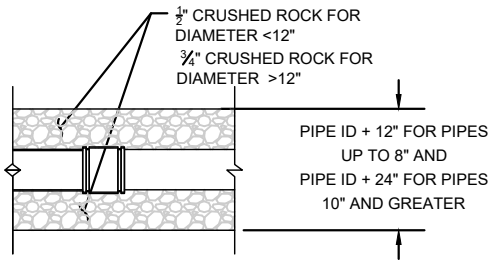

BEDDING AND BACKFILL
DETAIL 2

NOTES

1. ALL LATERAL CONNECTION INSTALLATIONS/REPLACEMENTS REQUIRE A PUBLIC WORKS PERMIT AND MUST BE COMPLETED BY CITY CONTRACTOR. THE STANDARD POINT REPAIR DETAIL SHALL BE USED FOR LATERAL CONNECTION ABANDONMENTS WHEN DIRECTED.

MATERIALS:

2. 316 STAINLESS STEEL COMPRESSION BANDS AND SHEAR RINGS AS MANUFACTURED BY MISSION PRODUCTS, FERNCO JOINTS INC., OR APPROVED EQUAL (TYP. EACH END OF POINT REPAIR). COUPLING TO BE A MINIMUM OF 6" WIDE.
3. ALL PIPE AND FITTINGS SHALL BE PVC SDR-35 PER ASTM 3034.
4. NEW SEWER PIPE TO MATCH EXISTING SEWER PIPE MATERIAL AND DIAMETER.

CONSTRUCTION:

5. CONTRACTOR SHALL EXCAVATE TRENCH SO THAT MIN. 12" ON EITHER SIDE OF REPAIR IS EXPOSED. IF REPAIR INVOLVES A WYE, CONTRACTOR SHALL EXPOSE MIN. 24" ON EITHER SIDE OF WYE.
6. PLACE AND WORK BY HAND OR OTHER APPROVED METHOD TO ENSURE ALL EXCAVATED VOIDS AND HAUNCH AREAS ARE FILLED AND PROVIDE UNIFORM SUPPORT. COMPACT CRUSHED ROCK ALL AROUND EXPOSED PIPE.
7. CONTRACTOR TO INSPECT NEARBY EXISTING SEWER PIPE FOR DEFECTS. IF ANY EXIST, NOTIFY THE CITY IMMEDIATELY.

REFERENCE:

8. FOR CONNECTIONS REPLACEMENTS, SEE DETAILS S-SL2 THROUGH S-SL6.
9. SAWCUTTING DETAILS AND TRENCH PAVING SHALL MEET REQUIREMENTS IN CITY STANDARD DETAIL U-3.0 THROUGH 3.2

STANDARD POINT REPAIR

REV. DATE: 06/2020 | DETAIL: S-SP3

APPROVED:

CITY ENGINEER

PUBLIC WORKS DIRECTOR

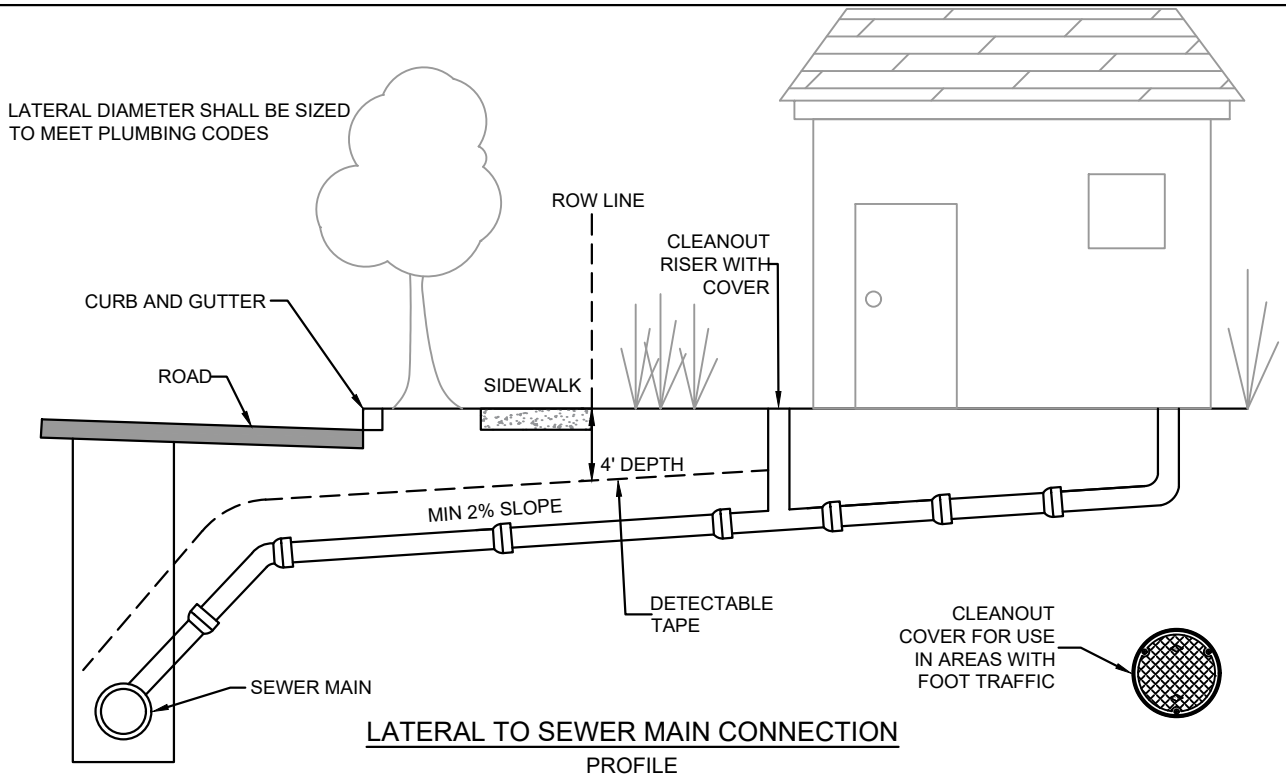

LATERAL TO SEWER MAIN CONNECTION

PROFILE

NOTES

1. PER THE MUNICIPAL SECTION 14.44.160, THE PRIVATE SEWER LATERAL, PRIVATE SEWAGE DISPOSAL SYSTEM OR INDUSTRIAL LIQUID WASTE PRE-TREATMENT FACILITY IS THE RESPONSIBILITY OF EACH PROPERTY OWNER WHOSE PROPERTY IS CONNECTED TO THE CITY SEWER SYSTEM.
2. FACTORY-FABRICATED CONNECTION FITTINGS (WYES OR TEES) ARE REQUIRED FOR ALL STANDARD SEWER LATERALS. LATERALS WILL ONLY BE PERMITTED TO TIE INTO MANHOLES WITH PRE-APPROVAL BY WASTEWATER
3. LATERALS SHALL BE CONNECTED TO THE SEWER MAIN DOWNSTREAM OF AN EXISTING MANHOLE.
4. CONTACT THE PUBLIC WORKS PERMIT COUNTER AT 630 GARDEN STREET OR (805) 564-5388 TO OBTAIN PERMITS FOR ALL SEWER LATERAL CONNECTION ("TAP") INSTALLATIONS.
5. ALL SEWER LATERAL IMPROVEMENTS IN THE PUBLIC RIGHT OF WAY AND CONNECTION INSTALLATIONS REGARDLESS OF LOCATION SHALL REQUIRE A PERMIT FROM THE CITY PUBLIC WORKS DEPARTMENT.

MATERIALS:

6. SEWER LATERAL PIPE AND FITTINGS SHALL BE BELL AND SPIGOT SDR-35 PVC, HDPE DR-17 OR AN APPROVED EQUAL BY THE ENGINEER. NON-JOINTED MATERIALS ARE FAVORABLE TO REDUCE THE POTENTIAL FOR INFILTRATION.
7. ALL CAULDER COUPLINGS SHALL BE "STRONG BACKS," A BAND SEAL TYPE COUPLING WITH AN OUTSIDE STAINLESS STEEL SHEAR RING.
8. SEWER LATERAL PIPE SHALL HAVE A MINIMUM DIAMETER OF 4", AND A MINIMUM SLOPE OF 2%. GRADE SHALL BE UNIFORM FROM MAIN TO PROPERTY LINE.
9. FACTORY FABRICATED WYES, TEES OR SADDLES ARE REQUIRED AND SHALL HAVE A MIN. DISTANCE OF 24" BETWEEN SERVICE CONNECTIONS.
10. BEDDING AND BACKFILL FOR LATERALS SHALL MEET THE SAME REQUIREMENTS FOR SEWER MAINS. SEE TRENCH BEDDING AND BACKFILLS STANDARD DETAILS S-01.0 AND S-01.1. NEW WYES SHALL BE SUPPORTED BY $\frac{1}{2}$" CRUSHED ROCK, 4" MIN.
11. FOR PATHWAYS WHERE FOOT TRAFFIC IS LIKELY, LATERAL CLEANOUTS SHALL BE JAY R. SMITH MFG. CO 4810-06PB OR EQUAL.

CONSTRUCTION:

12. ONLY CITY DESIGNATED CONTRACTOR IS PERMITTED TO INSTALL NEW OR REPLACE CONNECTIONS ON EXISTING SEWER MAINS.
13. WYES SHALL POINT DOWNSTREAM AND ENTER MAIN BETWEEN THE 10:00 - 11:00 POSITION OR 1:00 - 2:00 POSITION.
14. WHEN CHANGES IN GRADE ARE NECESSARY, CHANGES IN GRADE OF LATERAL SHALL BE MADE USING LONG-RADIUS BENDS.
15. THE DEPTH OF THE LATERAL AT THE PROPERTY LINE SHALL BE A MINIMUM OF 4 FEET, WITHOUT SPECIAL APPROVAL BY THE ENGINEER.
16. WHEN THE DEPTH OF THE SEWER MAIN IS 12 FEET OR MORE, INSTALL A CHIMNEY SEWER LATERAL PER STANDARD DETAIL S-SL7.
17. FOR NEW INSTALLATIONS, DETECTABLE TAPE OR TRACER WIRE SHALL BE INSTALLED FOR LOCATING SEWER LATERALS. TERMINATE TRACER WIRE INSIDE CLEANOUT. FOR CHIMNEY OR SLOPED LATERAL, SEE S-SL7.
18. IF LATERAL IS REPLACED BY TRENCHING, DETECTABLE TAPE SHALL BE INSTALLED PER S-SP1. IF TRENCHLESS REPLACEMENT, TRACER WIRE WITH AT LEAST ONE END OF TRACER WIRE EXPOSED SHALL BE SECURED TO THE NEW PIPE AS IT IS INSTALLED.

REFERENCE:

19. SEWER LATERAL TO SEWER MAIN CONNECTIONS SHALL BE PER DETAILS S-SL2 THROUGH S-SL8.
20. FOR WATER-SEWER SEPARATION REQUIREMENTS SEE STANDARD DETAIL U-05.0 THROUGH U-05.2 AND U-06.0.
21. SAWCUTTING DETAILS AND TRENCH PAVING SHALL MEET REQUIREMENTS IN CITY STANDARD DETAIL U-03.0 THROUGH U-03.2

STANDARD LATERAL DETAIL AND NOTES

REV. DATE: 06/2020 | DETAIL: S-SL1

APPROVED:

CITY ENGINEER

PUBLIC WORKS DIRECTOR

I. CONNECTIONS FOR NEW/REPLACE LATERALS TO EXISTING MAINS:

TYPE OF CONNECTION	*STANDARD CONNECTION METHOD*	*STANDARD DETAIL #*
LATERAL TO VCP MAIN	VCP WYE	S-SL3
LATERAL TO EXISTING PVC MAIN	STRAPPED RUBBER SADDLE	S-SL4
LATERAL TO EXISTING HDPE MAIN	ELECTROFUSION SADDLE	S-SL5
LATERAL TO SPIRAL WOUND MAIN	STRAPPED RUBBER SADDLE/INSERTA TEE	S-SL6
LATERAL TO CIPP MAIN	STRAPPED RUBBER SADDLE/INSERTA TEE	S-SL6

II. CONNECTIONS FOR EXISTING / NEW LATERALS TO NEW MAINS:

TYPE OF CONNECTION	*STANDARD CONNECTION METHOD*	*STANDARD DETAIL #*
LATERAL TO NEW PVC MAIN	PVC WYE / SADDLE	S-SL5
HDPE LATERAL TO NEW HDPE MAIN	ELECTROFUSION SADDLE	S-SL4

DEFINITIONS

ID - INSIDE DIAMETER
OD - OUTSIDE DIAMETER
VCP - VITRIFIED CLAY PIPE
PVC - POLYVINYL CHLORIDE PIPE
HDPE - HIGH DENSITY POLYETHYLENE
ROW - RIGHT OF WAY

SEAL OF THE CITY OF SANTA BARBARA CALIFORNIA

LATERAL CONNECTION MATRIX

REV. DATE: 06/2020 | DETAIL: S-SL2

APPROVED:

CITY ENGINEER

PUBLIC WORKS DIRECTOR

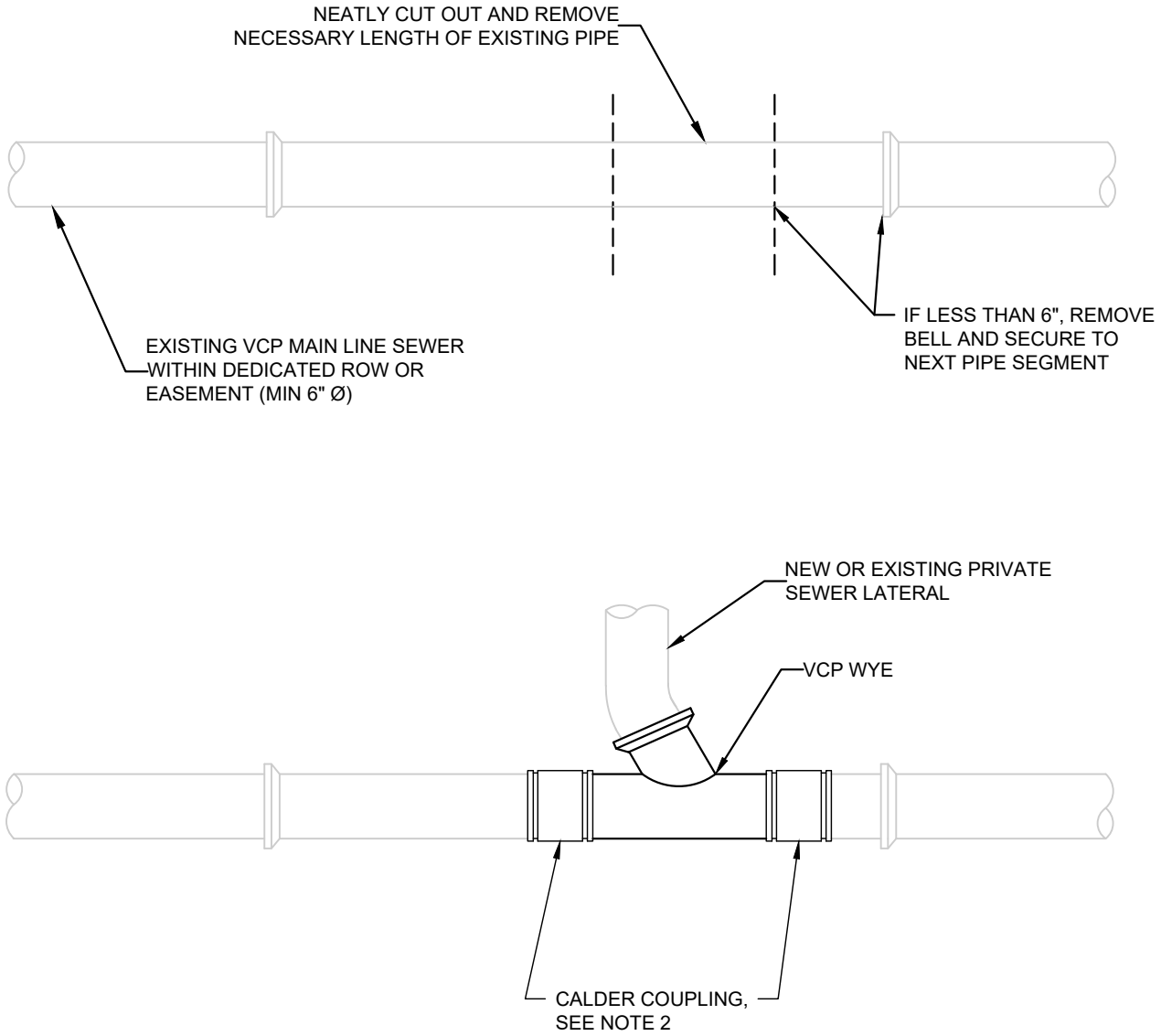

VCP LATERAL CONNECTION

PROFILE

NOTES

1. DETAIL FOR VITRIFIED CLAY PIPE ONLY.
2. ALL LATERAL CONNECTION INSTALLATIONS/REPLACEMENTS REQUIRE A PUBLIC WORKS PERMIT AND MUST BE COMPLETED BY CITY CONTRACTOR.

MATERIALS:

3. SECURE ENDS WITH CALDER COUPLING WITH 316 STAINLESS STEEL COMPRESSION BANDS AND SHEER RINGS AS MANUFACTURED BY MISSION PRODUCTS, FERNCO JOINTS INC, OR APPROVED EQUAL. COUPLING TO BE MIN 6" WIDE.
4. VCP WYES SHALL BE MISSION CLAY OR APPROVED EQUAL

CONSTRUCTION:

5. WHEN INSTALLING A NEW WYE ASSEMBLY TO AN EXISTING CLAY SEWER MAIN, THE MAIN SHALL BE INSPECTED BEFORE AND AFTER INSTALLATION AS DIRECTED BY CITY ENGINEER.

REFERENCE:

N/A

SEAL OF THE CITY OF SANTA BARBARA CALIFORNIA	TYPICAL VCP LATERAL CONNECTION	REV. DATE: 06/2020 DETAIL: S-SL3
		APPROVED: CITY ENGINEER
		PUBLIC WORKS DIRECTOR

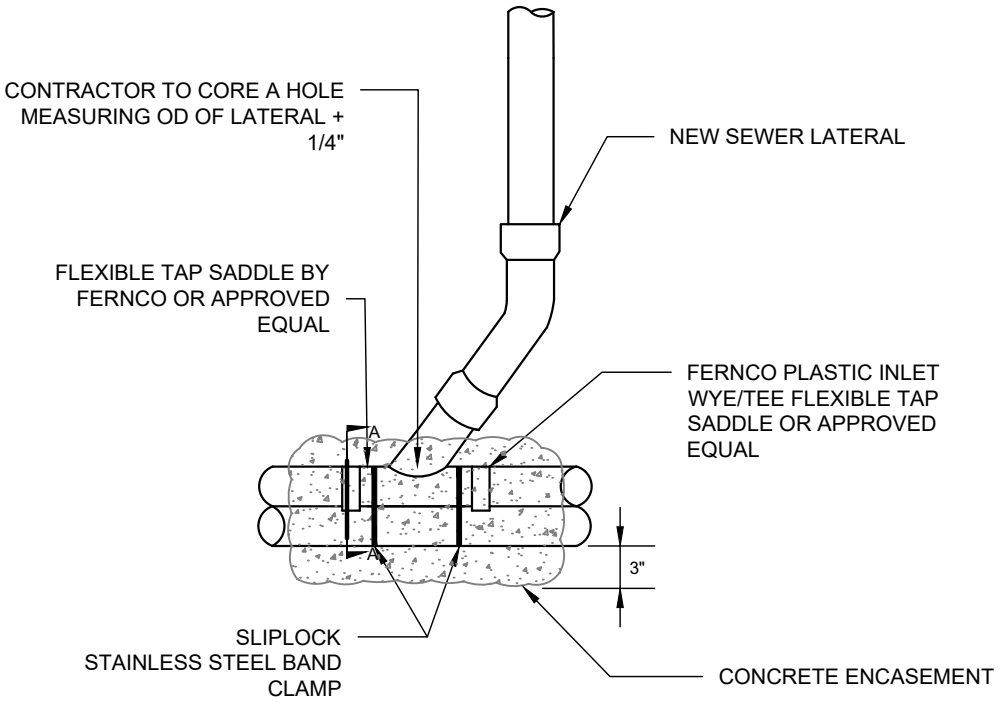

NEW LATERAL INTO EXISTING PVC MAIN

PROFILE

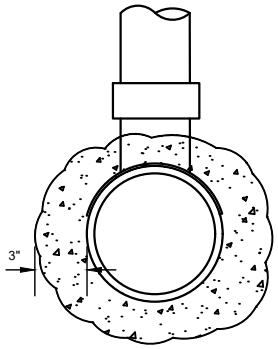

SADDLE ENCASEMENT

SECTION A-A

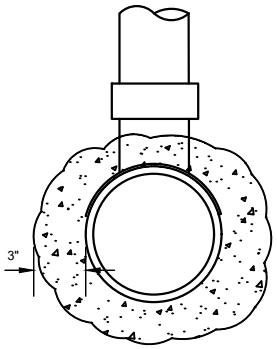

SADDLE CONNECTION

DETAIL

NOTES

1. ALL LATERAL CONNECTION INSTALLATIONS/REPLACEMENTS REQUIRE A PUBLIC WORKS PERMIT AND MUST BE COMPLETED BY CITY CONTRACTOR.

MATERIALS:

2. FLEXIBLE SADDLE (FERNCO OR APPROVED EQUAL) IN WYE OR TEE CONFIGURATION.
3. SLIP LOCK BANDS SHALL BE USED ALONG WITH LIQUID NAILS OR OTHER ADHESIVE TO SECURE FLEXIBLE SADDLE TO PVC.
4. CONCRETE FOR SADDLE ENCASEMENT SHALL BE CLASS 520-C-3250 PER STANDARD SPECIFICATIONS FOR PUBLIC WORKS CONSTRUCTION.

CONSTRUCTION:

5. CORE HOLE SAME DIAMETER AS ID OF LATERAL + ¼ INCH. IF EXISTING, CLEAN OUT HOLE, MAKE ¼ INCH GREATER THAN ID.

REFERENCE:

N/A

NEW LATERAL TO PVC MAIN

REV. DATE: 06/2020 | DETAIL: S-SL4

APPROVED:

CITY ENGINEER

PUBLIC WORKS DIRECTOR

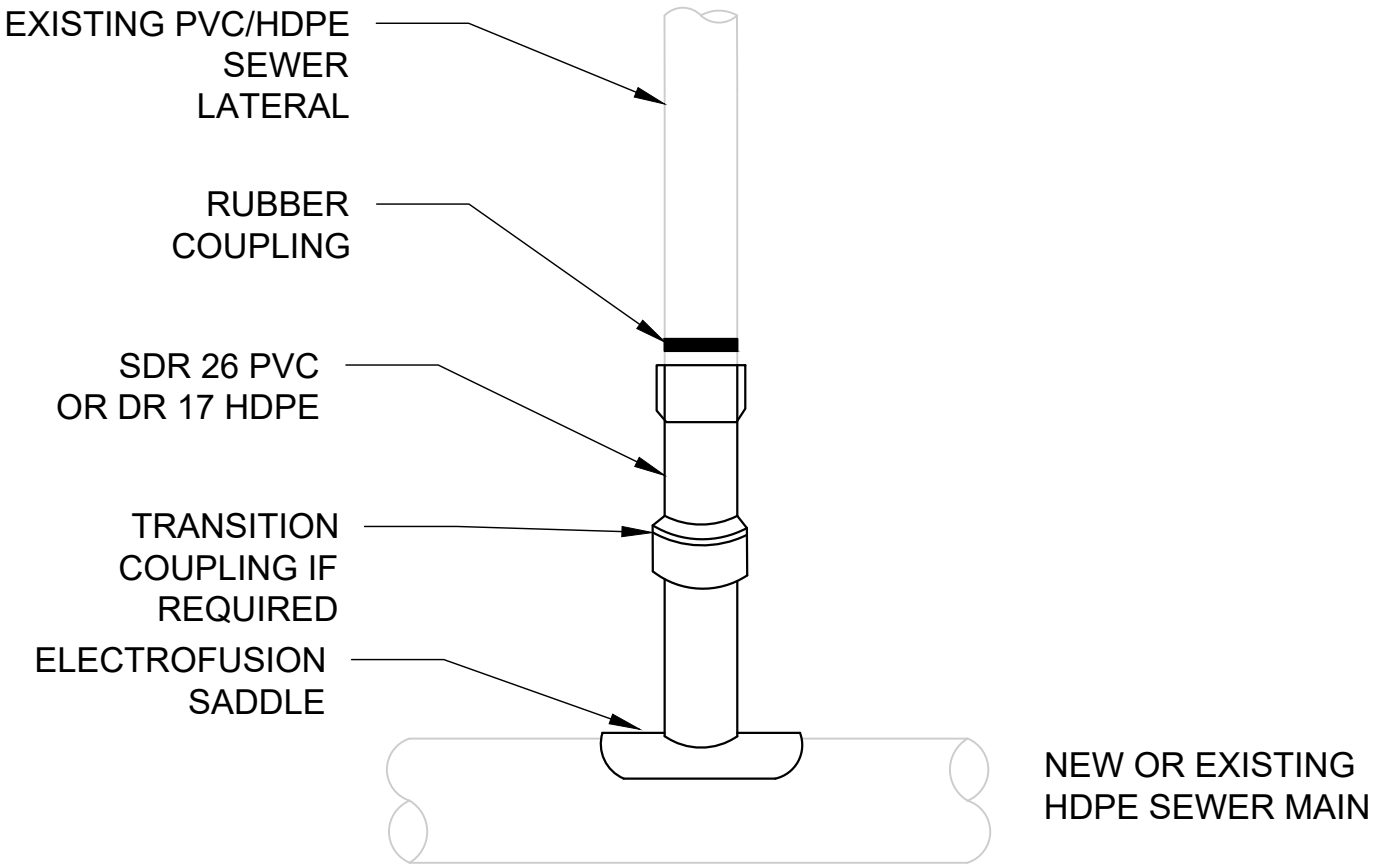

HDPE TO HDPE MAIN CONNECTION

PROFILE

NOTES

1. ALL LATERAL CONNECTION INSTALLATIONS/REPLACEMENTS REQUIRE A PUBLIC WORKS PERMIT AND MUST BE COMPLETED BY CITY CONTRACTOR.

MATERIALS:

2. RUBBER COUPLINGS SHALL BE NON-SHEAR TYPE. AND SEALED WITH AN ELASTOMERIC VULCANIZING SEALANT.
3. CHANGES IN PIPE TYPE AND CONNECTIONS ARE NOTED ON THE DRAWINGS.

CONSTRUCTION:

4. IF ADDITIONAL COUPLINGS ARE NEEDED TO MAKE A CONNECTION, THE CONTRACTOR SHALL USE ELECTROFUSION COUPLINGS.

REFERENCE:

N/A

LATERAL CONNECTION TO HDPE MAIN

REV. DATE: 06/2020 | DETAIL: S-SL5

APPROVED:

CITY ENGINEER

PUBLIC WORKS DIRECTOR

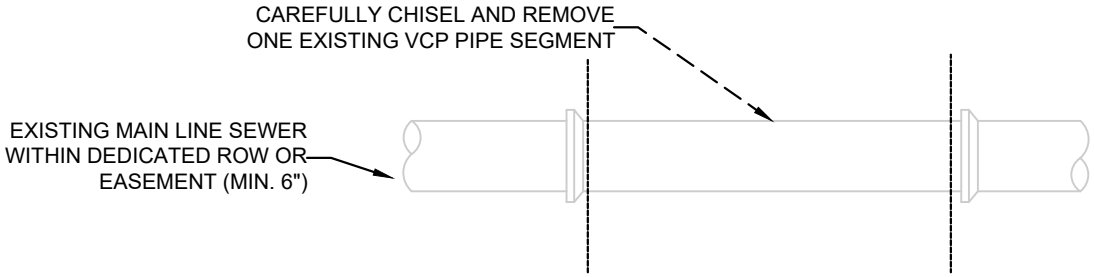

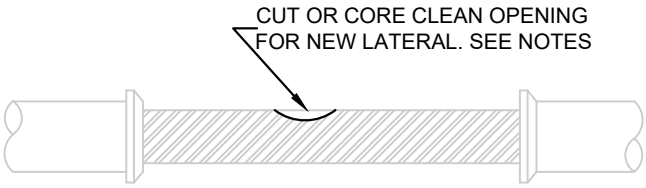

SPIRAL WOUND

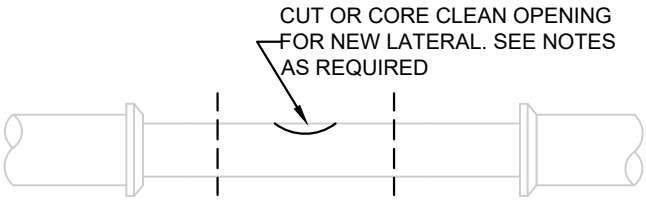

CIPP/PVC FOLD FORMED

CORE AN OPENING FOR THE LATERAL
MEASURING ID OF LATERAL +1/4"

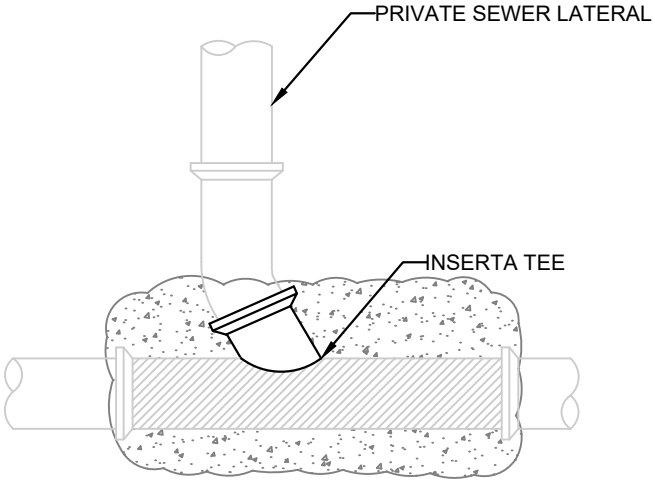

SPIRAL WOUND

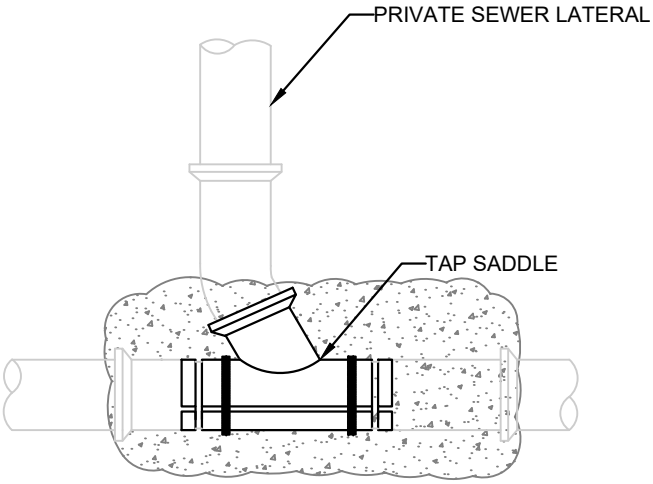

CIPP/PVC FOLD FORMED

INSTRUCTION FOR LINED LATERAL CONNECTION

PROFILE

NOTES

1. ALL LATERAL CONNECTION INSTALLATIONS/REPLACEMENTS REQUIRE A PUBLIC WORKS PERMIT AND MUST BE COMPLETED BY CITY CONTRACTOR.

MATERIALS:

2. TYPE OF CONCRETE FOR ENCASEMENT SHALL BE 520-C-3250.
3. INSERTA TEE FITTING OR APPROVED EQUAL SHALL BE USED TO REPLACE OR INSTALL NEW CONNECTION ON SPIRALWOUND SEWER MAINS.
4. TAP SADDLES (TEE OR WYE) SHALL BE FERNCO OR APPROVED EQUAL.

CONSTRUCTION:

5. IF NEW WYE, CORE HOLE SAME DIAMETER AS ID OF LATERAL + ¼ INCH. IF EXISTING, CLEAN OUT HOLE, MAKE ¼ INCH GREATER THAN ID.
6. APPLY EPOXY BASED ADHESIVE BETWEEN RUBBER SADDLE CIPP/PVC FOLD-FORMED LINER PRIOR TO SECURING STAINLESS STEEL BANDS.

REFERENCE:

N/A

	LATERAL CONNECTION TO REHABILITATED MAIN	REV. DATE: 06/2020	DETAIL: S-SL6
		APPROVED: CITY ENGINEER	
		PUBLIC WORKS DIRECTOR	

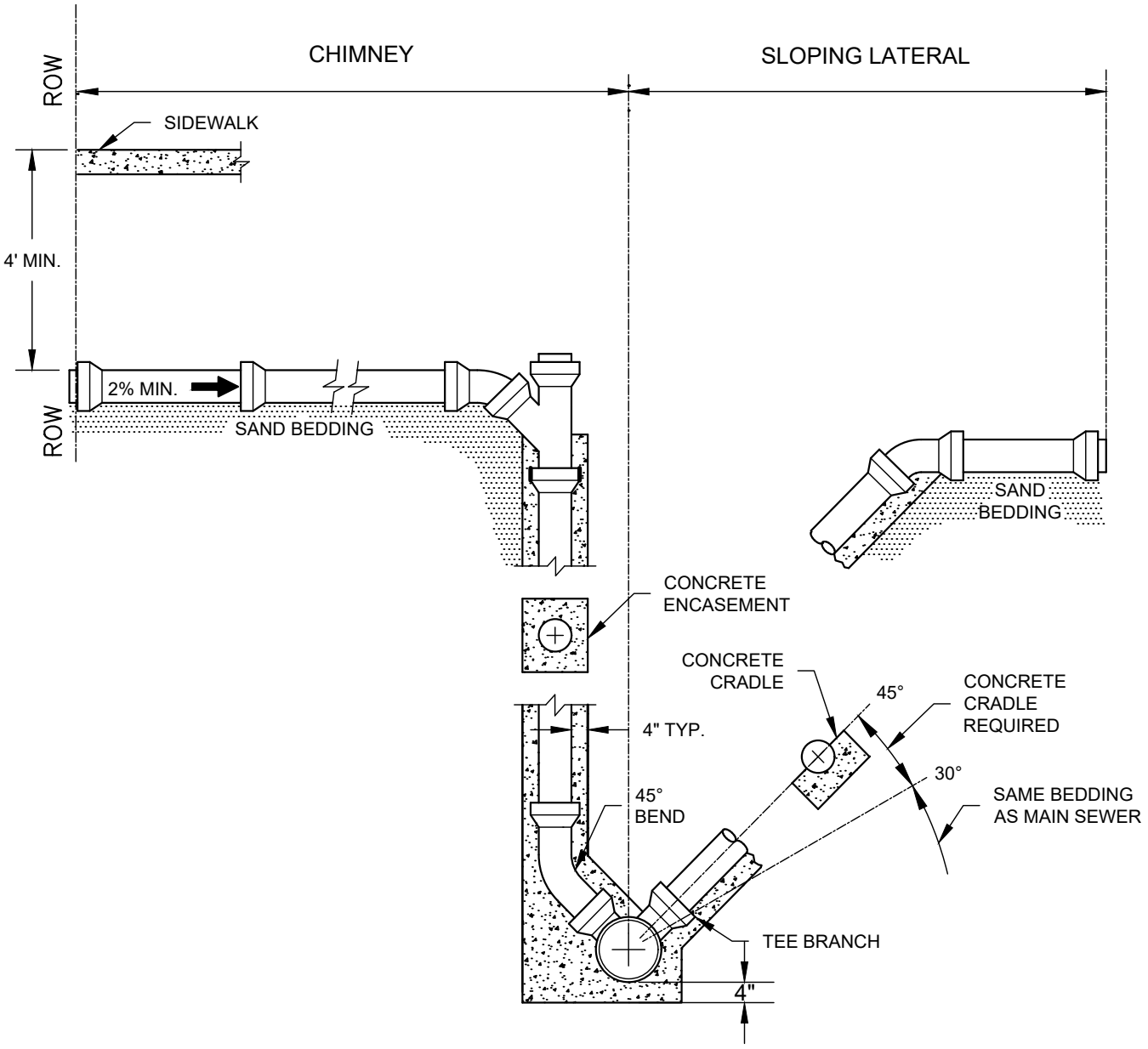

CHIMNEY / SLOPING LATERAL

PROFILE

NOTES

1. CHIMNEY SHALL BE USED WHEN LATERAL SLOPE EXCEEDS 45 DEGREE OR DEPTH OF MAIN SEWER IS 12 FEET OR MORE.
2. CONCRETE CRADLE REQUIRED WHEN LATERAL SLOPE IS BETWEEN 30 AND 45 DEGREES.
3. ALL LATERAL CONNECTION INSTALLATIONS/REPLACEMENTS REQUIRE A PUBLIC WORKS PERMIT AND MUST BE COMPLETED BY CITY CONTRACTOR.

MATERIALS:

4. BEDDING AND BACKFILL FOR LATERALS SHALL BE THE SAME AS FOR SEWER MAINS.
5. CONCRETE FOR CHIMNEY ENCASEMENT OR CRADLE SHALL BE CLASS 520-C-3250 PER STANDARD SPECIFICATIONS FOR PUBLIC WORKS CONSTRUCTION.
6. CHIMNEY SHALL MATCH LATERAL SIZE.
7. UP TO 4 BUILDING DRAINS FOR ONE PARCEL MAY BE CONNECTED PER EACH CHIMNEY AND WYE.

CONSTRUCTION:

8. CHIMNEY MATERIAL SHALL MATCH HOUSE CONNECTION ON MATERIAL.

REFERENCE:

SEAL OF THE CITY OF SANTA BARBARA CALIFORNIA	CHIMNEY AND SLOPING LATERAL	REV. DATE: 06/2020 DETAIL: S-SL7
		APPROVED: Brian D'Amico CITY ENGINEER
		Rebecca J Bjork PUBLIC WORKS DIRECTOR

GREASE CONTROL DEVICE (GCD)

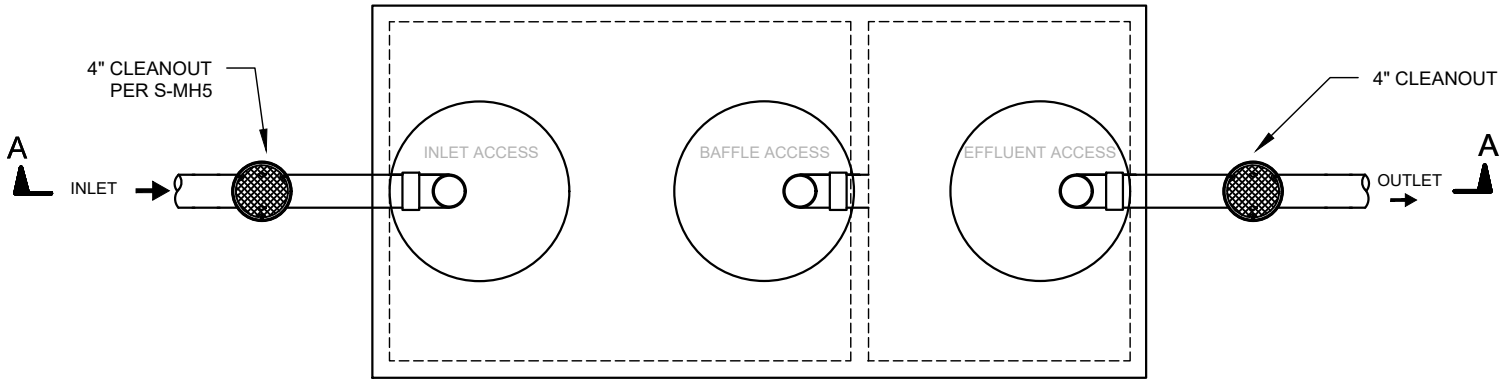

PLAN VIEW

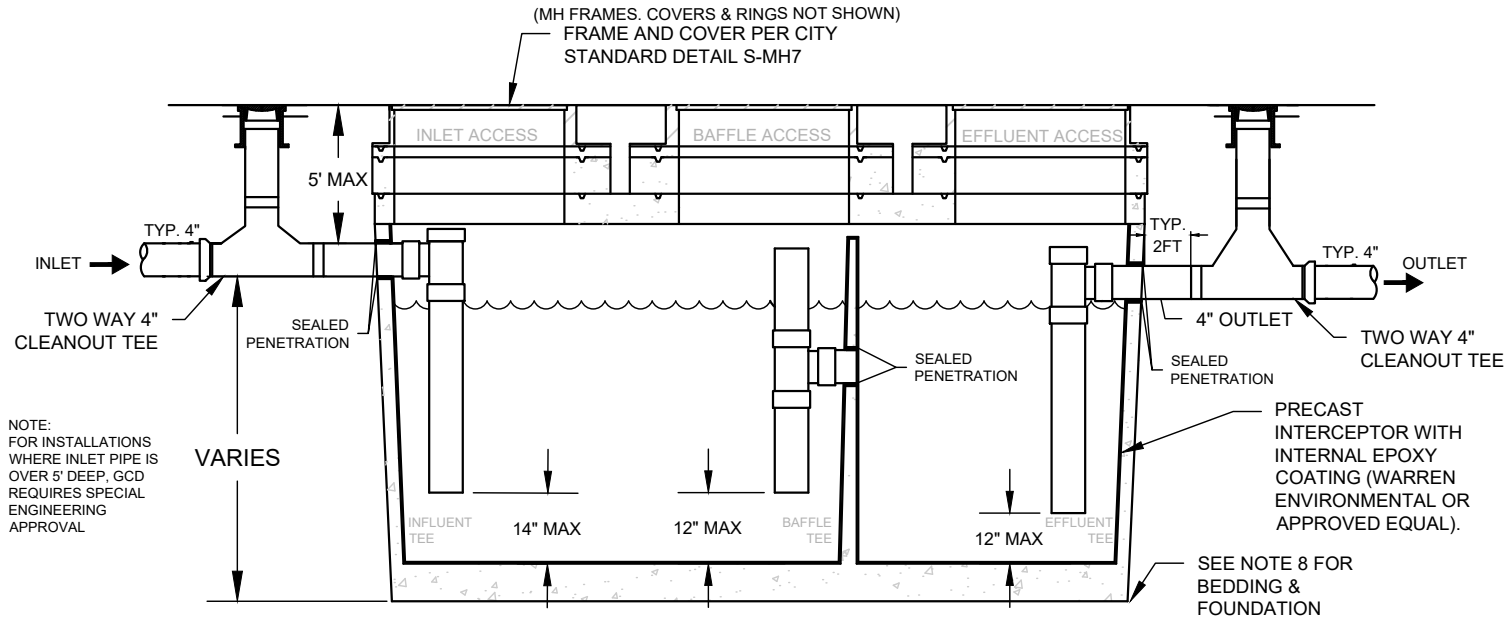

SECTION A-A

NOTES

1. GREASE CONTROL DEVICES (GCD) ARE NOT INTENDED FOR DOMESTIC SEWAGE. LOCATION AND TRIBUTARY DISCHARGE SOURCES SHALL BE APPROVED BY BUILDING & SAFETY PRIOR TO INSTALLATION AND CONNECTION TO CITY SEWER. CONNECTIONS TO GCD SHALL NOT ALLOW INTRODUCTION OF EMULSIFIERS OR CHEMICALS CAUSING PASS THROUGH.
2. EACH GCD SHALL BE INSTALLED ON PRIVATE PROPERTY AND CONNECTED SO THAT IT SHALL BE EASILIY ACCESSIBLE FOR INSPECTION, CLEANING AND REMOVAL OF THE INTERCEPTED GREASE.
3. EACH GCD SHALL BE SIZED TO MEET EXPECTED SOLIDS LOADING TO COMPLY WITH CITY FATS, OILS AND GREASE PROGRAM AND COMPLY WITH HYDRAULIC CAPACITY PER CALIFORNIA PLUMBING CODE SECTION 1014.2.1.

MATERIALS:

4. ALL INTERNAL PIPING SHALL BE 4" OR 6" TO MATCH LATERAL DIAMETER. INTERNAL PIPING MATERIAL SHALL BE HDPE OR PVC. NO METALLIC PIPE WILL BE ALLOWED TO BE USED FOR INTERNAL PIPING FOR THE GCD. CONTRACTOR TO CONNECT LATERAL PIPING TO GCD WITH ALL NECESSARY FITTINGS.
5. INTERCEPTOR LOCATED IN AN AREA SUBJECT TO TRAFFIC MUST BE HS-20 TRAFFIC RATED.
6. FOR NON TRAFFIC LOCATIONS, NON-PRECAST INTERCEPTORS MADE OF POLYPROPELENE(ENDURA XL OR APPROVED EQUAL) IS ACCEPTABLE.
7. ALL PRE-CAST CONCRETE GCDS SHALL BE EPOXY LINED PRIOR TO ENTERING SERVICE USING WARREN ENVIRONMENTAL EPOXY COATING (OR APPROVED EQUAL). MINIMUM LINING THICKNESS SHALL BE 125 MILS.

TESTING:

8. EPOXY LINING SHALL BE PULL TESTED PER ASTM-D4541 AND SECTION 500-2.4.4 IN GREENBOOK. ALL TEST LOCATIONS SHALL BE REPAIRED 2" PAST EDGE OF SCORE. RESULTS SHALL BE SUBMITTED TO WASTEWATER COMPLIANCE SPECIALIST FOR APPROVAL.

BEDDING:

9. INTERCEPTOR SHALL BE PLACED ON A MINIMUM OF 6" TYPE I BEDDING MATERIAL, COMPACTED TO 95% RELATIVE COMPACTION.

SEAL OF THE CITY OF SANTA BARBARA CALIFORNIA	GREASE CONTROL DEVICE (GCD)	REV. DATE: 06/2020 DETAIL: MISC-FOG
		APPROVED: CITY ENGINEER
		PUBLIC WORKS DIRECTOR