City of Santa Barbara

Community Development Department

SantaBarbaraCA.gov

Building & Safety Division

Notice of Violation

Director's Office
Tel: (805) 564-5502
Fax: (805) 564-5477

Administration, Housing & Human Services
Tel: (805) 564-5461
Fax: (805) 564-5477

Building & Safety
Tel: (805) 564-5485
Fax: (805) 564-5476

Planning
Tel: (805) 564-5470
Fax: (805) 564-5477

Rental Housing Mediation Program
Tel: (805) 564-5420
Fax: (805) 564-5477

630 Garden Street
PO Box 1990
Santa Barbara, CA
93102-1990

November 16, 2017

Silverman, Jeff
1620 Eucalyptus Hill Rd.
Santa Barbara, CA 93103

APN: 015-232-010
Case Number: ENF2010-00757

Subject Property: 1620 Eucalyptus Hill Rd., Santa Barbara, CA 93103

Dear Silverman, Jeff:

Due to a recent concern filed with the Building & Safety Division, an inspection at the Subject Property was performed on November 1, 2017. As a result of our investigation, we have found the Property to be in violation of Santa Barbara Municipal Code Section 22.04.010 as follows:

VIOLATION: The following construction has taken place without approvals or permit:
The laundry room and hookups were added without the required permit. This created new habitable floor area. Exterior alterations made without the required zoning clearance and design review approval. This illegal laundry room encloses and blocks access to the electrical meter main.
The balcony on the second floor shows on the original plans as 4' x 30'. When the first floor addition was constructed, the configuration of the balcony changed and it became a roof deck without the required permit. Further, there are no safety railings on the deck.

CODE SECTION: 2016 California Residential Code, Section R105.1 PERMITS
Any owner, or authorized agent who intends to construct, enlarge, alter, repair, move, demolish, or change the occupancy of a building or structure, or to erect, install, enlarge, alter, repair, remove, convert or replace any electrical, gas mechanical or plumbing system, the installation of which is regulated by this code, or to cause any such work to be done, shall first make application to the building official and obtain the required permit

REMEDY: A building permit will be required to either demolish or legalize the illegal as-built construction. Bring this Notice to the Building Permit Counter at 630 Garden Street and ask for an explanation of the plan submittal that will be required for permit application and issuance. Be aware that permit issuance must be obtained by the dates prescribed in this Notice. If permits are not obtained within the prescribed time frames, you will be ordered to obtain a demolition permit immediately.

The Building Official has determined that the violations on the Property must be abated in an expeditious manner.

- **A permit must be obtained and work commenced within 60 days of the date of this Notice of Violation.**
- **Work must be completed and all violations abated within 60 days of the date of permit issuance.**

If either of these dates are not met, further legal action may be necessary.

This Notice of Violation identifies the concerns of the Building and Safety Division of the City of Santa Barbara. Other departments or divisions of this City and other governmental agencies may have additional concerns or requirements.

Tax Implications
Pursuant to California Revenue and Taxation Code sections 17274 and 24436.5, the City may forward information regarding you and any other owners of the above-referenced property to the State Franchise Tax Board for violations of State and City laws related to health, safety, and building if the above listed property constitutes substandard housing. This action will prevent you, any other owners, or subsequent owners from deducting interest, taxes, depreciation, or amortization for the above-referenced property on state income taxes. In order to prevent this, you must immediately comply with all State and City laws to abate all violations.

Appeal Rights
Any party aggrieved by this decision of the City's Chief Building Official including but not limited to decisions or determinations made relative to the application and interpretations of the technical codes, and the refusal, suspension, voiding, or revocation of a license or permit, may appeal such decision to the Building and Fire Code Board of Appeals by obtaining an appeal form on the internet at http://www.santabarbaraca.gov/services/planning/forms/building.asp or from the City Building & Safety office. You are required to submit the appeal form within ten (10) days from the date of this notice in order for your appeal to be heard by the Building and Fire Code Board of Appeals. The completed appeal form must be delivered to the City's Building & Safety office located at 630 Garden St., Santa Barbara, CA 93101.

For information regarding the appeals process, please refer to Santa Barbara Municipal Code Section 22.04.020 or contact the Community Development Department at (805) 564-5502. For information on Building and Fire Code Board of Appeals the please visit the following website http://www.santabarbaraca.gov/gov/brdcomm/ac/bfcba/default.asp

F.A.R. Calculator

Instructions: Enter the information in the white boxes below. The spreadsheet will calculate the proposed FAR (floor area ratio), the 100% max FAR (per the Zoning Ordinance), and the 85% max FAR (per the Zoning Ordinance). Additionally it will determine whether a FAR Modification is required.

The Net Lot Area does not include any Public Road Easements or Public Road Right-of-Way areas. The proposed **TOTAL Net FAR Floor Area** shall include the net floor area of all stories of all building, but may or may not include basement/cellar floor area. For further clarification on these definitions please refer to SBMC §28.15.083.

ENTER Project Address:	Project Address
Is there a basement or cellar existing or proposed?	No
ENTER Proposed TOTAL Net FAR Floor Area (in sq. ft.):	3,842

ENTER Zone ONLY from drop-down list:	E-1
ENTER Net Lot Area (in sq. ft.):	26,386
Is the height of existing or proposed buildings 17 feet or greater?	Yes
Are existing or proposed buildings two stories or greater?	Yes
The FAR Requirements are:	GUIDELINE**

ENTER Average Slope of Lot:	45.10%
Does the height of existing or proposed buildings exceed 25 feet?	No
Is the site in the Hillside Design District?	Yes
Does the project include 500 or more cu. yds. of grading outside the main building footprint?	Yes
An FAR MOD is not required per SBMC §28.15	

FLOOR AREA RATIO (FAR):	0.146
Lot Size Range:	>= 20,000 sq. ft.
MAX FAR Calculation (in sq. ft.):	4,430 + (0.013 x lot size in sq. ft.)
100% MAX FAR:	0.181
100% MAX FAR (in sq. ft.):	4,773
85% of MAX FAR (in sq. ft.):	4,057
80% of MAX FAR (in sq. ft.):	3,818
The 3842 square foot proposed total is 81% of the MAX FAR.*	

* **NOTE:** Percentage total is rounded up.

****NOTE:** If your project is located on a site with multiple or overlay zones, please contact Planning Staff to confirm whether the FAR limitations are "Required" or "Guideline".

Acreage Conversion Calculator	
ENTER Acreage to Convert to square footage:	1.00
Net Lot Area (in sq. ft.):	43560

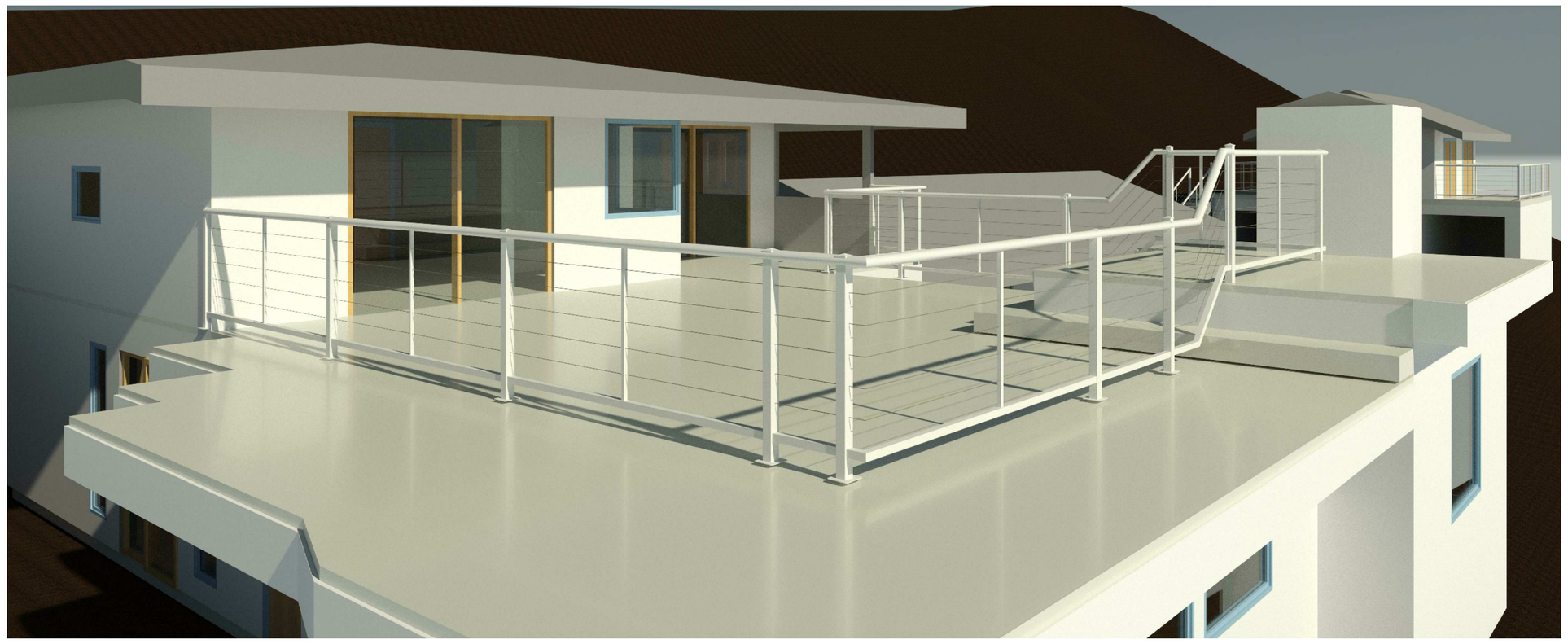

Build Code Violations:
22.04.010 : Construction has taken place without approval or permit
ENF2010-00757 and ZIR2010-00405

Scope of Work:
This permit seeks approval to
Demolish unpermitted laundry room to resolve ENF2010-00757
Establish a roof deck on the existing flat roof which will be enclosed
with a safety railing at the required 10' setback from interior property lines

Project Statistcis:

Land Use Zone District:	RS-15 Single Residential
Construction Type:	Type 5 Wood Construction
General Plan:	Eastside
Slope:	45.1%
Grading:	No Proposed Changes
High Fire:	Yes
Flood Plain:	No
Parking:	3 Covered (2 required)
Open Yard:	1,250 (1,250 required)
Hillside Design District:	Yes
SWMP:	Tier 2

Square Footage:	Net (SF)	Gross (SF)
(E) First Floor	2,186	2,219
(E) Second Floor	625	650
(E) Detached Carport	683	711
(E) Detached Storage	348	362
(E) Covered Patios	342	367
(E) Roof Deck	800	800
(E) Total	3,842	3,942
(D) Laundry Room	33	37
(P) Total	**3,842**	**3,979**

Lot Coverage: - no proposed changes

Building Footprint	2,930 SF	12%
Backyard Tile	1,066 SF	4%
Cement Driveway	2,967 SF	12%
Permeable	18,972 SF	72%
Existing Lot Size	26,386 SF	100%

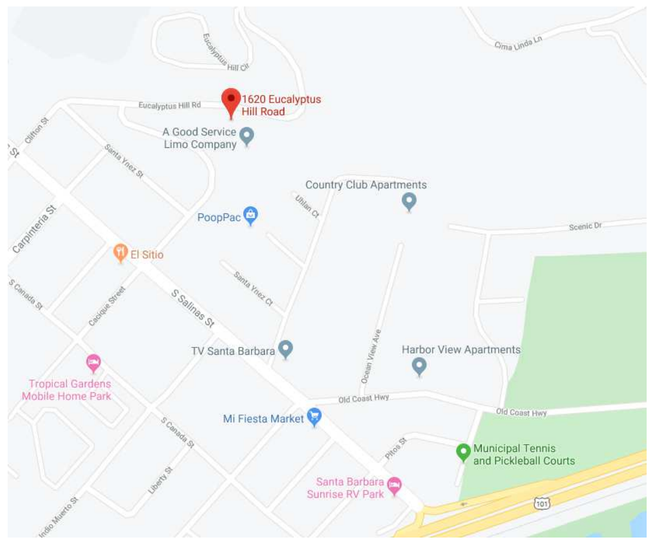

1620 Eucalyptus Hill Road
Santa Barbara, CA 93103

APN: 015-232-010
Zone: RS-15
Case #: ENF2010-00757

Home Owner:
Eric Dahlke
edahlke@gmail.com
(805) 252-6277
1620 Eucalyptus Hill Road
Santa Barbara, CA 93013

Home Owner:
Jeff Silverman
agsoccer17@gmail.com
(650) 793-2972
1620 Eucalyptus Hill Road
Santa Barbara, CA 93013

Buiding Inspector:
Lauren Anderson
landerson@santabarbaraca.gov
(805) 897-2604
630 Garden Street
Santa Barbara, CA 93101

Architectural Advisor:
Ellen Bildsten
ellen@sb-designgroup.com
(805) 845-2646 x 101
Bildsten Architecture and Planning, Inc.
30 West Figueroa Street
Santa Barbara, CA 93101

Violation Remedy / Roof Deck Permit

Cover

Project Number	Project Number
Date	Issue Date
Drawn By	Author
Checked By	Checker

A-1

10/30/2019 8:27:42 PM

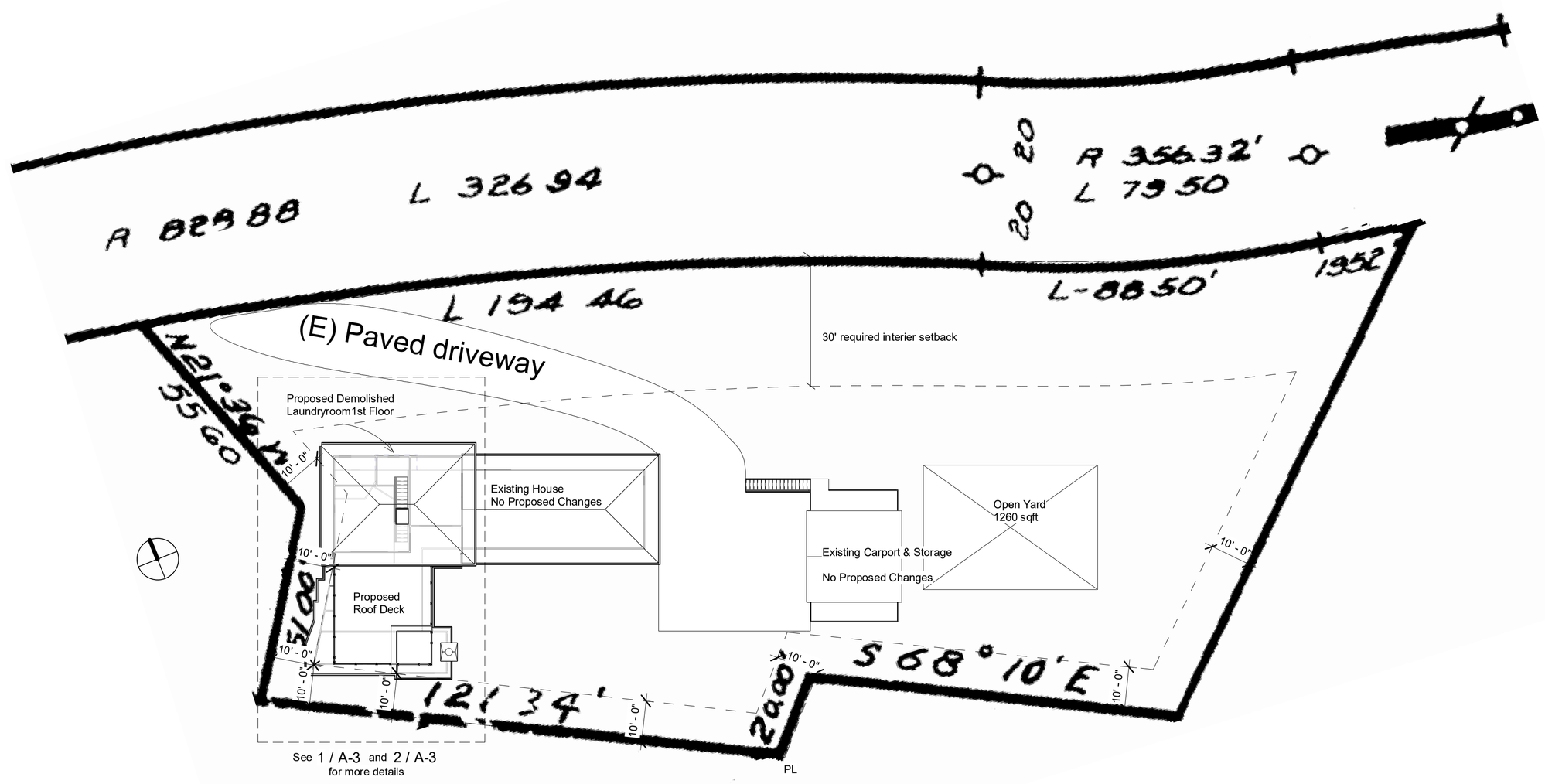

1 Siteplan
1" = 20'-0"

1620 Eucalyptus Hill Road
Santa Barbara, CA 93103

APN: 015-232-010
Zone: RS-15
Case #: ENF2010-00757

Home Owner:
Eric Dahlke
edahlke@gmail.com
(805) 252-6277
1620 Eucalyptus Hill Road
Santa Barbara, CA 93013

Home Owner:
Jeff Silverman
agsoccer17@gmail.com
(650) 793-2972
1620 Eucalyptus Hill Road
Santa Barbara, CA 93013

Buiding Inspector:
Lauren Anderson
landerson@santabarbaraca.gov
(805) 897-2604
630 Garden Street
Santa Barbara, CA 93101

Architectural Advisor:
Ellen Bildsten
ellen@sb-designgroup.com
(805) 845-2646 x 101
Bildsten Architecture and Planning, Inc.
30 West Figueroa Street
Santa Barbara, CA 93101

Violation Remedy / Roof Deck Permit

Site Plan

Project Number	Project Number
Date	Issue Date
Drawn By	Author
Checked By	Checker

A-2

10/30/2019 8:27:43 PM

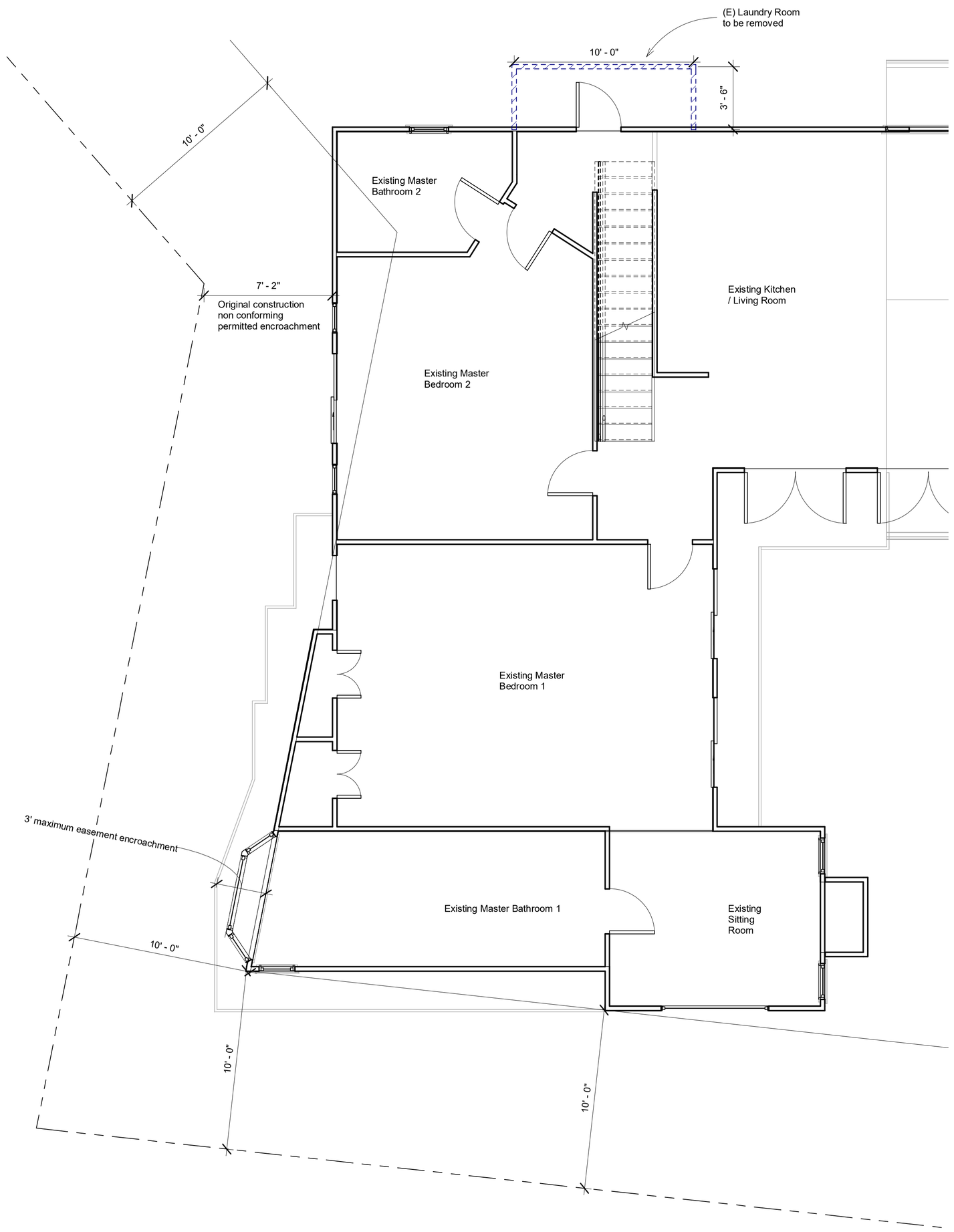

1 Level 1
1/4" = 1'-0"

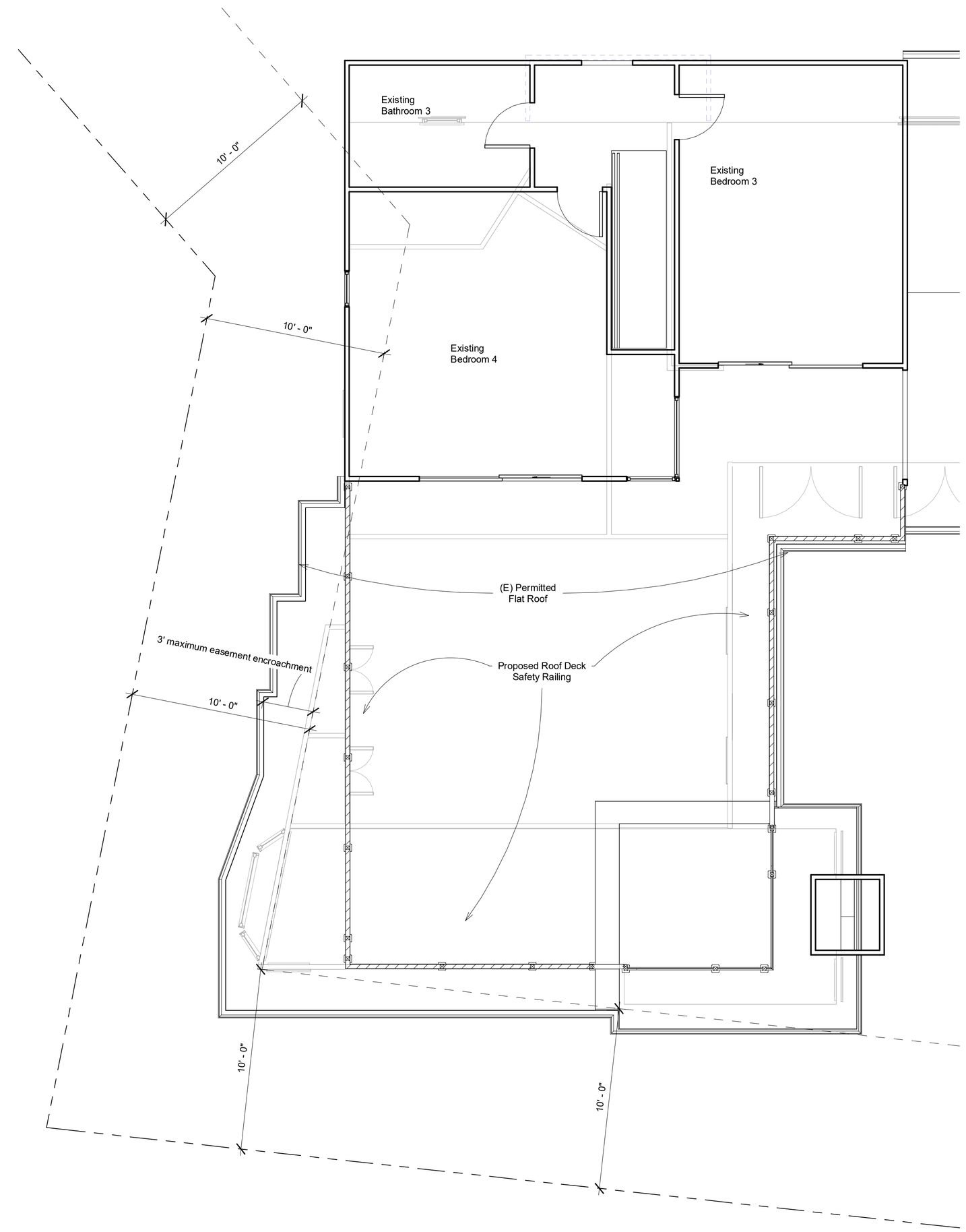

2 Level 2
1/4" = 1'-0"

1620 Eucalyptus Hill Road
Santa Barbara, CA 93103

APN: 015-232-010
Zone: RS-15
Case #: ENF2010-00757

Home Owner:
Eric Dahlke
edahlke@gmail.com
(805) 252-6277
1620 Eucalyptus Hill Road
Santa Barbara, CA 93013

Home Owner:
Jeff Silverman
agsoccer17@gmail.com
(650) 793-2972
1620 Eucalyptus Hill Road
Santa Barbara, CA 93013

Buiding Inspector:
Lauren Anderson
landerson@santabarbaraca.gov
(805) 897-2604
630 Garden Street
Santa Barbara, CA 93101

Architectural Advisor:
Ellen Bildsten
ellen@sb-designgroup.com
(805) 845-2646 x 101
Bildsten Architecture and Planning, Inc.
30 West Figueroa Street
Santa Barbara, CA 93101

Violation Remedy / Roof Deck Permit

Floor Plans

Project Number	Project Number
Date	Issue Date
Drawn By	Author
Checked By	Checker

A-3

10/30/2019 8:27:43 PM

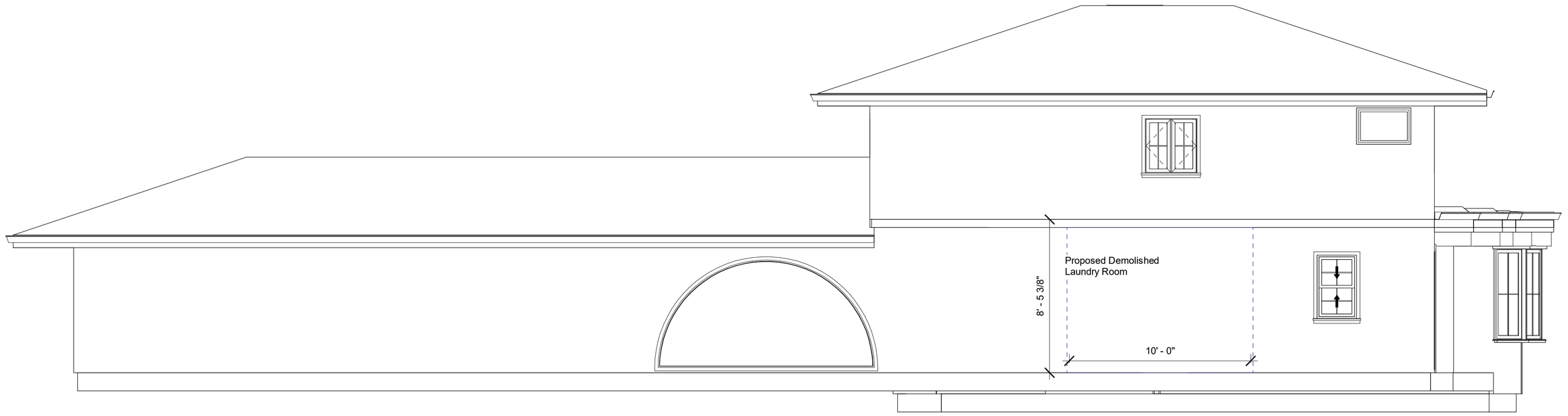

3 North Elevation
1/4" = 1'-0"

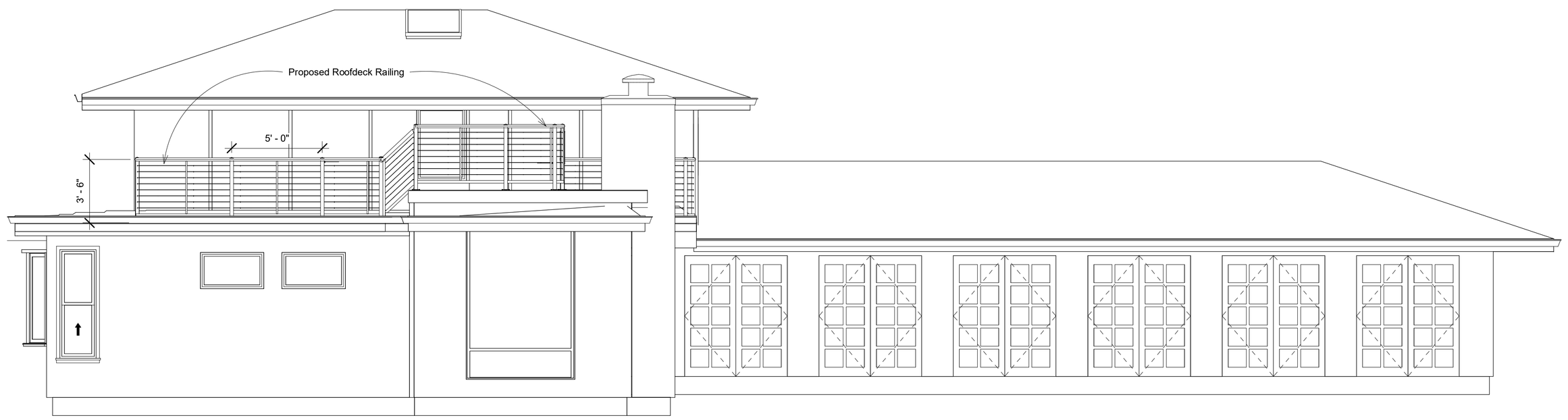

1 South Elevation
1/4" = 1'-0"

4 West Elevation
1/4" = 1'-0"

2 East Elevation
1/4" = 1'-0"

1620 Eucalyptus Hill Road
Santa Barbara, CA 93103

APN: 015-232-010
Zone: RS-15
Case #: ENF2010-00757

Home Owner:
Eric Dahlke
edahlke@gmail.com
(805) 252-6277
1620 Eucalyptus Hill Road
Santa Barbara, CA 93013

Home Owner:
Jeff Silverman
agsoccer17@gmail.com
(650) 793-2972
1620 Eucalyptus Hill Road
Santa Barbara, CA 93013

Buiding Inspector:
Lauren Anderson
landerson@santabarbaraca.gov
(805) 897-2604
630 Garden Street
Santa Barbara, CA 93101

Architectural Advisor:
Ellen Bildsten
ellen@sb-designgroup.com
(805) 845-2646 x 101
Bildsten Architecture and Planning, Inc.
30 West Figueroa Street
Santa Barbara, CA 93101

Violation Remedy / Roof Deck Permit

Elevations

Project Number	Project Number
Date	Issue Date
Drawn By	Author
Checked By	Checker

A-4

10/30/2019 8:27:44 PM

CR Laurence Aluminum Rail System ARS

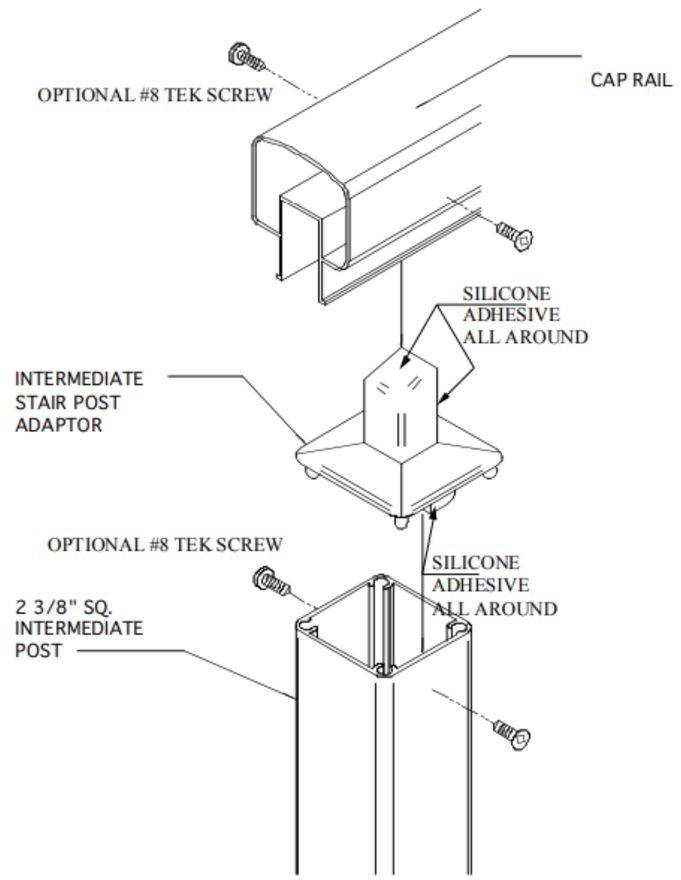

1 Railing Details
1/4" = 1'-0"

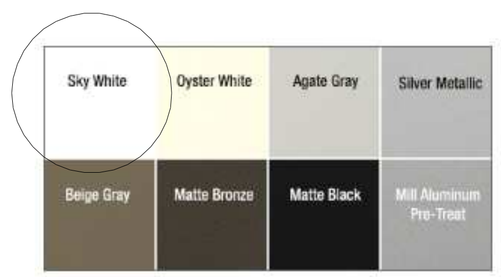

2 Railing Color
1/4" = 1'-0"

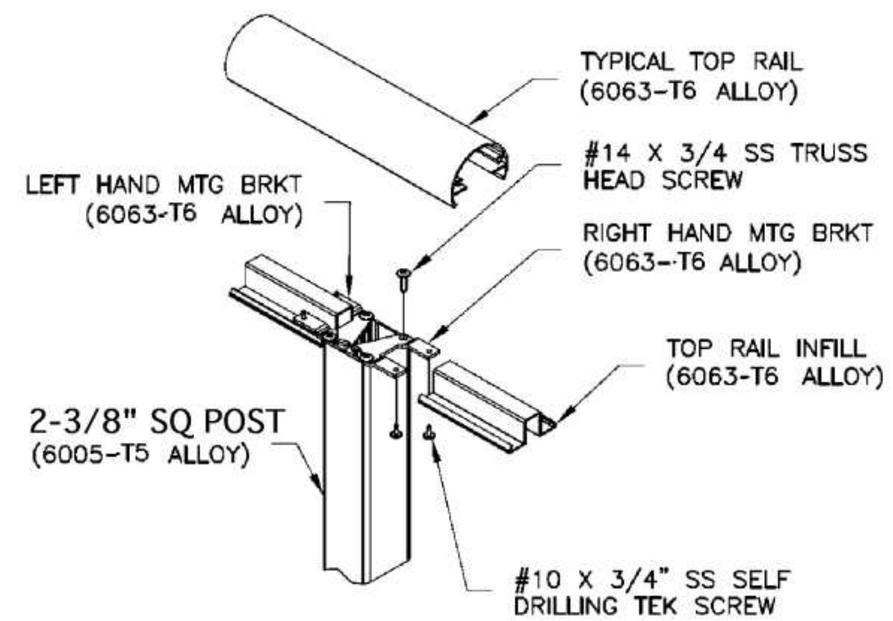

3 Railing Middle Connector
1/4" = 1'-0"

Series 100 Top Rail

Butts into post

Alloy 6063 – T6 Aluminum

Allowable Stress
ADM Table 2-24

F_T = 15 ksi

$F_C \rightarrow$ 6' span

$$\frac{2\ Lb\ SC}{(IyJ)} = \frac{2 \cdot 72'' \cdot 0.246}{(0.295 * 1.53)^{1/2}}$$

= 52.7<130 therefore
Fc = 15 ksi

SERIES 100 TOP RAIL

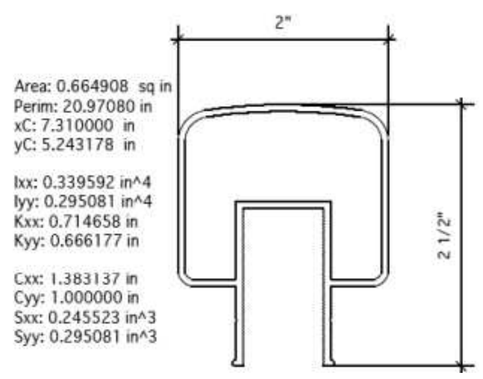

4 Railing top rail
1/4" = 1'-0"

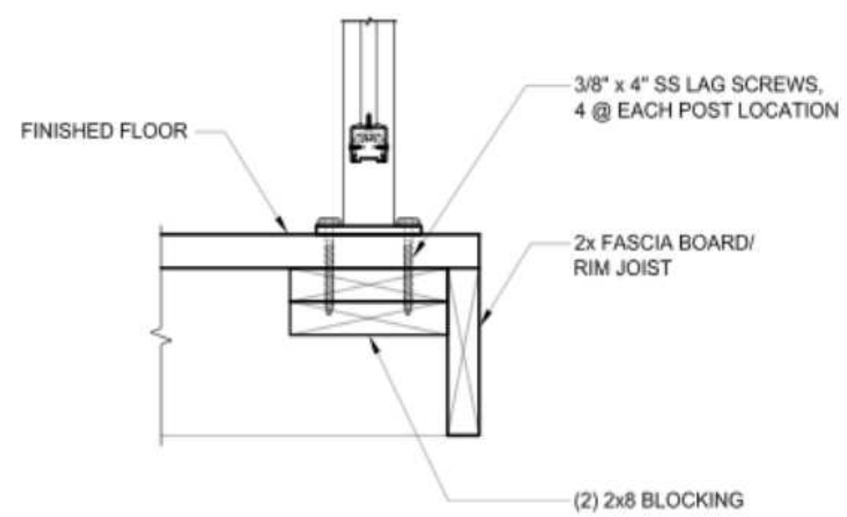

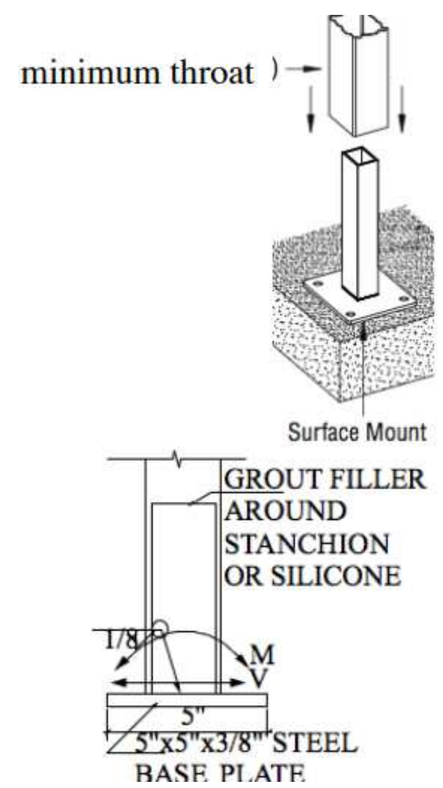

5 Railling Base Plate Water Intrusion Prevention
1/4" = 1'-0"

1620 Eucalyptus Hill Road
Santa Barbara, CA 93103

APN: 015-232-010
Zone: RS-15
Case #: ENF2010-00757

Home Owner:
Eric Dahlke
edahlke@gmail.com
(805) 252-6277
1620 Eucalyptus Hill Road
Santa Barbara, CA 93013

Home Owner:
Jeff Silverman
agsoccer17@gmail.com
(650) 793-2972
1620 Eucalyptus Hill Road
Santa Barbara, CA 93013

Buiding Inspector:
Lauren Anderson
landerson@santabarbaraca.gov
(805) 897-2604
630 Garden Street
Santa Barbara, CA 93101

Architectural Advisor:
Ellen Bildsten
ellen@sb-designgroup.com
(805) 845-2646 x 101
Bildsten Architecture and Planning, Inc.
30 West Figueroa Street
Santa Barbara, CA 93101

Violation Remedy / Roof Deck Permit

Safety Rail Detailing

Project Number	Project Number
Date	Issue Date
Drawn By	Author
Checked By	Checker

A-5

10/30/2019 8:27:44 PM

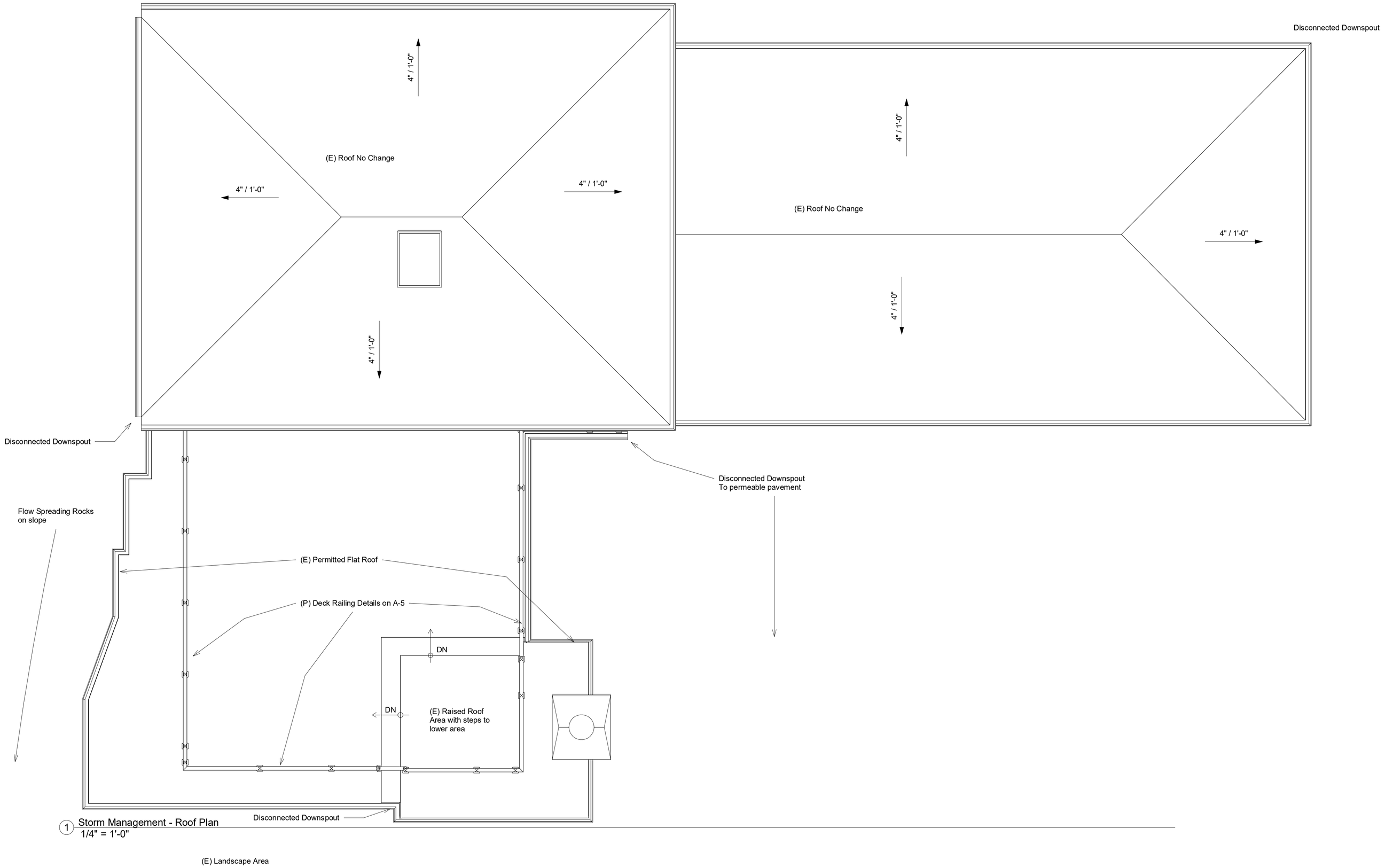

1 Storm Management - Roof Plan
1/4" = 1'-0"

1620 Eucalyptus Hill Road
Santa Barbara, CA 93103

APN: 015-232-010
Zone: RS-15
Case #: ENF2010-00757

Home Owner:
Eric Dahlke
edahlke@gmail.com
(805) 252-6277
1620 Eucalyptus Hill Road
Santa Barbara, CA 93013

Home Owner:
Jeff Silverman
agsoccer17@gmail.com
(650) 793-2972
1620 Eucalyptus Hill Road
Santa Barbara, CA 93013

Buiding Inspector:
Lauren Anderson
landerson@santabarbaraca.gov
(805) 897-2604
630 Garden Street
Santa Barbara, CA 93101

Architectural Advisor:
Ellen Bildsten
ellen@sb-designgroup.com
(805) 845-2646 x 101
Bildsten Architecture and Planning, Inc.
30 West Figueroa Street
Santa Barbara, CA 93101

Violation Remedy / Roof Deck Permit

Storm Management Roof Plan

Project Number	Project Number
Date	Issue Date
Drawn By	Author
Checked By	Checker

A-6

10/30/2019 8:27:44 PM