BLOCK RESIDENCE

1790 Sycamore Canyon Road Santa Barbara, CA

PDA/FINAL APPROVAL

101019

This document has been created by **kras design studio**, which retains all copyrights to the document. It may not be reproduced, distributed, displayed, modified or used by any other person for any purpose without the express written consent of the architect.

Karl Kras *Architect*

kras design studio
116 E. Yanonali St, Unit A2, Santa Barbara, CA 93101 805.451.3172

AERIAL PHOTOGRAPH

PROJECT DIRECTORY

OWNER: KARA BLOCK
P.O. BOX 90305
SANTA BARBARA, CA 93190
T: 805.450.0733
E: kara@karablock.com

ARCHITECT: KARL KRAS
KRAS DESIGN STUDIO
116 E. YANONALI STREET, UNIT A2
SANTA BARBARA, CA 93101
T: 805.451.3172
E: karl@krasdesignstudio.com
L: CA 27575

STRUCTURAL: CHAD PRUETT, P.E. 77909
ASHLEY & VANCE ENGINEERING, INC
210 E. COTA STREET
SANTA BARBARA, CA 93101
T: 805.962.9966
E: chad@ashleyvance.com

SOILS: MARK BRAUN
BRAUN ASSOCIATES, INC
P.O. BOX 2004
BUELLTON, CA 93427
T: 805.688.5429
E: mark@braunassociatesinc.com

CIVIL: DALE WEBER, PE
MAC DESIGN ASSOCIATES
1933 CLIFF DRIVE, SUITE 6
SANTA BARBARA, CA 93109
T: 805.957.4748
E: dweber@macdesignsb.com

CONTR: T.B.A.
ADDRESS
ADDRESS
T:
E:
L:

PROJECT DESCRIPTION

THIS PROJECT CONSISTS OF CONTRUCTING :

01. A NEW 2,120 SQUARE FOOT (NET), TWO-STORY SINGLE FAMILY DWELLING ON THE EXISTING CONCRETE SLAB.
02. A NEW 665 SQUARE FOOT (NET), DETACHED TWO-CAR GARAGE WITH 500 SQUARE FOOT (NET) ACCESSORY DWELLING UNIT (ADU) ABOVE.
04. NEW PAIR OF 8'-0" x 6'-0" HI ENTRY GATES ON EXISTING 10' HI COLUMNS.
05. RENOVATION OF CITY OF SB HISTORIC LANDMARK: LUTAH RIGGS DESIGNED 1926 JACK TROUGH/COURTNEY FOUNTAIN.

ADDITIONAL PERMITS REQUIRED

FIRE SPRINKLERS REQUIRED UNDER SEPARATE PERMIT

PROJECT STATISTICS & DATA

PARCEL ADDRESS :	1790 SYCAMORE CAYON ROAD, SANTA BARBARA, CA 93108
PARCEL NUMBER :	013-163-018
ZONE DISTRICT :	RS-1A (RESIDENTIAL SINGLE UNIT)
GENERAL PLAN :	RIVIERA : CIELITO
CONSTRUCTION TYPE :	TYPE VI:
OCCUPANCY GROUP :	R (RESIDENTIAL)
DESIGN REVIEW :	HISTORIC LNADMARKS COMMISSION (HLC)
APPLICABLE CODES	
BUILDING CODE :	2016 CALIFORNIA BULDING CODE
MECHANICAL CODE :	2016 CALIFORNIA MECHANICAL CODE
PLUMBING CODE :	2016 CALIFORNIA PLUMBING CODE
ELECTRICAL CODE :	2016 CALIFORNIA ELECTRICAL CODE
ENERGY CODE :	2016 CALIFORNIA GREEN BUILDING STANDARDS CODE, TITLE-24
NFPA :	2016 FIRE CODE
CONSTRUCTION :	2016 CALIFORNIA OSHA CONSTRUCTION SAFETY ORDERS
SANTA BARBARA :	ORDINANCE #5440
LOT SIZE (GIS) :	34,309 SQUARE FEET = 0.79 ACRE
SLOPE (GIS) :	26%
HIGH FIRE ZONE :	YES
HEIGHT LIMIT :	
ALLOWABLE :	MAX. ALLOWABLE HEIGHT IS 30 FEET
PROPOSED :	22'-0"
GRADING (C.Y.)	
CUT AND FILL UNDER MAIN BUILDING :	160 CUBIC YARDS
CUT AND FILL OUTSIDE MAIN BUILDING :	20 CUBIC YARDS
IMPORT :	0 CUBIC YARDS
EXPORT :	0 CUBIC YARDS
SETBACKS :	
FRONT :	30'-0" (PER SBMC 30.20.030.B.1)
INTERIOR :	15'-0"
OPEN YARD SPACE :	PER SBMC 30.185.040.0
REQUIRED :	MIN. AREA OF 1,250 SF W/20' x 20' MIN. DIMENSION
PROPOSED :	1,250 SQUARE FEET
SWMP COMPLIANCE :	
REQUIRED :	TIER 3 – HILLSIDE DESIGN DISTRICT MEDIUM PROJECT WITH ≥ 500 SQUARE FEET OF IMPERVIOUS AREA

FLOOR AREA CALCULATIONS :	GROSS SF	NET SF
PROPOSED RESIDENCE		
LOWER LEVEL	1,785 SF	1,610 SF
SECOND LEVEL	575 SF	510 SF
TOTAL LIVING SPACE	2,360 SF	2,120 SF
PROPOSED ACCESSORY STRUCTURE:		
GARAGE – LOWER LEVEL	550 SF	500 SF
STORAGE – LOWER LEVEL	175 SF	165 SF
ADU – SECOND LEVEL	625 SF	500 SF
TOTAL ACCESSORY SPACE	1,350 SF	1,165 SF
PATIOS/DECKS/UNFINISHED SPACE		
EXISTING	200 SF	
PROPOSED (GARAGE UNFINSHED SPACE AND ADU DECK)	430 SF	

LOT COVERAGE :	EXISTING		PROPOSED	
BUILDING FOOTPRINT	2,500 SF	7.2 %	2,450 SF	7.3 %
IMPERMEABLE SURFACES	7,165 SF	20.9 %	6,465 SF	18.7 %
PERMEABLE SURFACES	24,644 SF	71.9 %	25,394 SF	74.0 %
TOTAL LOT AREA	34,309 SF	100 %	34,309 SF	100 %

NUMBER OF PARKING SPACES :	
REQUIRED	2 COVERED SPACES
PROPOSED	2 COVERED SPACES

SHEET INDEX

GENERAL
- **G0.00** COVER SHEET
- **G0.01** PROJECT STATISTICS & DATA
- **G0.02** GENERAL NOTES
- **G0.03** GENERAL NOTES
- **G0.04** STREET PHOTOGRAPHS
- **G0.05** SITE PHOTOGRAPHS
- G0.06 TITLE 24 ENERGY ANALYSIS
- G0.07 TITLE 24 ENERGY ANALYSIS
- G0.08 TITLE 24 ENERGY ANALYSIS

CIVIL
- **C1.01** BMP DRAINAGE PLAN

LANDSCAPE
- **L1.01** LANDSCAPE PLAN

ARCHITECTURAL
- **A1.01** PROPOSED SITE PLAN
- **A1.02** JACK TROUGH/ENTRY GATE PLAN
- **A2.01** FIRST LEVEL FLOOR PLANS
- **A2.02** SECOND LEVEL FLOOR PLANS
- **A2.03** FIRST LEVEL REFLECTED CEILING PLAN
- **A2.04** SECOND LEVEL REFLECTED CEILING PLAN
- **A2.05** ROOF PLANS
- **A3.01** MAIN RESIDENCE-EXTERIOR ELEVATIONS
- **A3.02** MAIN RESIDENCE-EXTERIOR ELEVATIONS
- **A3.03** GARAGE/ADU-EXTERIOR ELEVATIONS
- **A4.01** MAIN RESIDENCE-SECTIONS
- **A4.02** MAIN RESIDENCE-SECTIONS
- **A4.03** MAIN RESIDENCE-SECTIONS
- **A4.04** GARAGE/ADU-SECTIONS
- **A5.01** FINISH SCHEDULES
- **A5.02** DOOR & WINDOW SCHEDULES
- **A6.01** EXTERIOR DETAILS
- **A6.02** EXTERIOR DETAILS
- **A6.03** DOOR & WINDOW DETAILS

STRUCTURAL
- **S-1.1** STRUCTURAL TITLE SHEET
- **S-1.2** STRUCTURAL SPECIFICATIONS
- **S-1.3** SPECIAL INSPECTIONS
- **S-2.1** MAIN RESIDENCE FOUNDATION PLAN
- **S-2.2** MAIN RESIDENCE FLOOR FRAMING PLAN
- **S-2.3** MAIN RESIDENCE FRAMING PLAN
- **S-2.4** GARAGE/ADU FOUNDATION PLAN
- **S-2.5** GARAGE/ADU FLOOR FRAMING PLAN
- **S-2.6** GARAGE/ADU ROOF FRAMING PLAN
- **S-3.1** STRUCTURAL DETAILS
- **S-3.2** STRUCTURAL DETAILS
- **S-3.2** STRUCTURAL DETAILS

PLUMBING
- **P1.00** PLUMBING NOTES & SCHEDULES
- **P1.01** FIRST LEVEL PLUMBING & FIXTURE PLAN
- **P1.02** SECOND LEVEL PLUMBING & FIXTURE PLAN

MECHANICAL
- **M1.01** FIRST LEVEL MECHANICAL PLAN
- **M1.02** SECOND LEVEL MECHANICAL PLAN

ELECTRICAL
- **E1.00** ELECTRICAL NOTES & SCHEDULES
- **E1.01** FIRST LEVEL ELECTRICAL PLAN
- **E1.02** SECOND LEVEL ELECTRICAL PLAN

SEPARATE PERMIT ITEMS

01. FIRE SUPRESSION SYSTEM REQUIRED FOR MAIN RESIDENCE AND DETACHED GARAGE.

SWMP CALCULATIONS

PRE	**EXISTING STRUCTURES**	ROOF PLAN
	EXISTING FOUNTIAN, GATE POSTS, COLONNADE & RETAINING WALLS	250 SF
	EXISTING HARDSCAPE	5,245 SF
POST	**PROPOSED NEW IMPERVIOUS AREA**	
	PROPOSED NEW STRUCTURES	415 SF
	PROPOSED REPLACED IMPERVIOUS AREA	
	PROPOSED STRUCTURE REPLACING EXISTING HARDSCAPE	2,330 SF
	PROPOSED REMOVED IMPERVIOUS AREA	
	PROPOSED PERVIOUS AREA	2,075 SF

TIER 3
WATER FROM NEW STRUCTURES AND EXISTING HARDSCAPE WILL NOT INFILTRATE THE SOIL BASED ON THE EXISTING SOIL CONDITIONS. PROPOSED BMP'S EMPLOYEED WILL TREAT WATER AND CARRY IT TO STREET DRAINAGE AREA.

VICINITY MAP

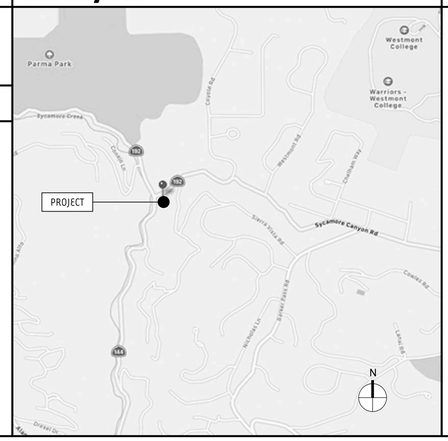

FLOOR TO LOT AREA RATIO (FAR): PER SBMC 28.15.083

ENTER Project Address:	1790 Sycamore Canyon Road
Is there a basement or cellar existing or proposed?	No
ENTER Proposed TOTAL Net FAR Floor Area (in sq. ft.):	2,785
ENTER Zone ONLY from drop-down list:	R-1
ENTER Net Lot Area (in sq. ft.):	34,309
Is the height of existing or proposed buildings 17 feet or greater?	Yes
Are existing or proposed buildings two stories or greater?	Yes
The FAR Requirements are:	GUIDELINE**
ENTER Average Slope of Lot:	26.00%
Does the height of existing or proposed buildings exceed 25 feet?	No
Is the site in the Hillside Design District?	Yes
Does the project include 500 or more cu. yds. of grading outside the main building footprint?	No
An FAR MOD is not required per SBMC §28.15	
FLOOR AREA RATIO (FAR):	0.081
Lot Size Range:	>= 20,000 sq. ft.
MAX FAR Calculation (in sq. ft.):	4,430 + (0.013 x lot size in sq. ft.)
100% MAX FAR:	0.142
100% MAX FAR (in sq. ft.):	4,876
85% of MAX FAR (in sq. ft.):	4,145
80% of MAX FAR (in sq. ft.):	3,901
The 2785 square foot proposed total is 58% of the MAX FAR.*	

kras design studio

BLOCK RESIDENCE
1790 Sycamore Canyon Road
Santa Barbara, CA 93108

KRAS DESIGN STUDIO
116 E Yanonali Street, Unit A2
Santa Barbara, CA 93101
karl@krasdesignstudio.com

This document has been created by kras design studio, which retains all copyrights to the document. It may not be reproduced, distributed, displayed, modified or used by any other person for any purpose without the express written consent of the architect.

Revisions:

PROJECT DATA & SITE PLAN

G0.01

10.10.19

ABBREVIATIONS

A	
AC	AIR CONDITIONING
ADJ	ADJACENT
APPROX.	APPROXIMATE
ARCH.	ARCHITECT
A.F.F.	ABOVE FINISHED FLOOR
A.N.G.	AVERAGE NATURAL GRADE
B	
BD	BOARD
BLDG	BUILDING
BLKG	BLOCKING
BM	BEAM
BN	BOUNDRY NAILING
BOB	BOTTOM OF BEAM
BOT	BOTTOM
C	
CAB	CABINET
CEM	CEMENT
CER	CERAMIC
CJ	CONTROL JOINT
CL	CENTERLINE
CLG	CEILING
CLK'G	CAULKING
CLR	CLEAR
CNR	CENTER
CNTR	COUNTER
CO	CLEAN OUT
COL	COLUMN
CONC	CONCRETE
CONT	CONTINUOUS
CTSK	COUNTERSINK
D	
DBL	DOUBLE
DET	DETAIL
DF	DOUGLAS FIR
DIA	DIAMETER
DIM	DIMENSION
DN	DOWN
DR	DOOR
DS	DOWNSPOUT
DW	DISHWASHER
DWG	DRAWING
E	
E	EAST
(E)	EXISTING
EA	EACH
EXJT	EXPANSION JOINT
ELEC	ELECTRIC
ELEV	ELEVATION
EN	EDGE NAILING
EPB	ELECTRIC PANEL BOARD
EQ	EQUAL
EQUIP	EQUIPMENT
EXP	EXPANSION
EXT	EXTERIOR
F	
FD	FLOOR DRAIN
FDN	FOUNDATION
FF	FINISH FLOOR
FG	FINISHED GRADE
FIN	FINISH
FLR	FLOOR
FLASH'G	FLASHING
FLUOR	FLUORESCENT
FOC	FACE OF CONCRETE
FOF	FACE OF FINISH
FOM	FACE OF MASONRY
FOP	FACE OF PLYWOOD
FOS	FACE OF STUD
FT	FOOT OR FEET
FP	FIREPROOF
FPLC	FIREPLACE
FTG	FOOTING
FURR'G	FURRING
G	
GA	GAUGE
GALV	GALVANIZE
GLZG	GLAZING
GRND	GROUND
GR	GRADE
GYP	GYPSUM
H	
HB	HOSE BIB
HDR	HEADER
HDWD	HARDWOOD
HGT	HEIGHT
HORIZ	HORIZONTAL
HTR	HEATER
HVAC	HEATING VENTILATION AC
I	
ID	INSIDE DIMENSION
INSUL	INSULATION
INT	INTERIOR
J	
JST	JOIST
K	
KIT	KITCHEN
L	
LAM	LAMINATE
LAV	LAVATORY
LIN	LINEN
LT	LIGHT
M	
MAX	MAXIMUM
MECH	MECHANICAL
MEMB	MEMBRANE
MTL	METAL
MFR	MANUFACTURER
MIN	MINIMUM
MISC	MISCELLANEOUS
N	
N	NORTH
(N)	NEW
NIC	NOT IN CONTRACT
NO/#	NUMBER
NTS	NOT TO SCALE
O	
OA	OVERALL
OC	ON CENTER
OD	OUTSIDE DIMENSION
OFF	OFFICE
OPEN'G	OPENING
OPP	OPPOSITE
P	
PG	PAINT GRADE
PL	PROPERTY LINE
PLAM	PLASTIC LAMINATE
PLAS	PLASTIC
PLWD	PLYWOOD
PNTD	PAINTED
PT	PRESSURE TREATED
R	
RA	RETURN AIR
RAD	RADIUS
REF	REFERENCE
REG	REGISTER
REINF	REINFORCED
REQ'D	REQUIRED
REV	REVISED
RM	ROOM
RO	ROUGH OPENING
S	
S	SOUTH
SA	SUPPLY AIR
SC	SOLID CORE
SCHED	SCHEDULE
SECT	SECTION
SHWR	SHOWER
SIM	SIMILAR
SPEC	SPECIFICATION
SQ	SQUARE
STD	STANDARD
STL	STEEL
STOR	STORAGE
STRUC	STRUCTURAL
SUSP	SUSPENDED
SYM	SYMMETRICAL
T	
T	TREAD
T&G	TONGUE & GROOVE
TEL	TELEPHONE
TOP	TOP OF PLATE
TOS	TOP OF SLAB
TOW	TOP OF WALL
TV	TELEVISION
TYP	TYPICAL
U	
UNFN	UNFINISHED
UNO	UNLESS NOTED OTHERWISE
V	
VB	VAPOR BARRIER
VERT	VERTICAL
W	
W	WEST
WD	WOOD
W/	WITH
WO	WITHOUT
WC	WATER CLOSET
WP	WATERPROOFING
Y	
YD	YARD

SYMBOLS

DETAIL (SECTION)	1 A8.01
DETAIL (PLAN)	1 A8.01
SECTION	1 A8.01
GRIDLINES	X 010; Y 010
WALL CONSTRUCTION REFERENCE	
ELEVATION CALLOUT	1A 1B 1C 1D A501 INTERIOR; 1 A4.01 EXTERIOR
LEVEL (RIGHT SIDE OF DRAWING)	LABEL 0'-0"
LEVEL (LEFT SIDE OF DRAWING)	LABEL 0'-0"
SPOT ELEVATION (DATUM)	LABEL 0'-0"
SHEET REFERENCE	TITLE SCALE 01
DOOR TAG	101
WINDOW TAG	101
KEYNOTE	1
WALL TYPE	A
REVISION TAG	1
MATERIAL CALLOUT	100
ROOM TAG	ROOM NAME 101
BREAK LINE	
FINISH MATERIAL CHANGE	CONCRETE CARPET
STEP INDICATION	6"
CODE REVIEW NOTE	B OCCUPANCY GROUP; 100 SQUARE FOOTAGE; 3 OCCUPANCY LOAD
PROPERTY LINE	
NORTH REFERENCE	N
INTERNATIONAL SYMBOL OF ACCESSIBILITY	

kras design studio

BLOCK RESIDENCE
1790 Sycamore Canyon Road
Santa Barbara, CA 93108

KRAS DESIGN STUDIO
116 E Yanonali Street, Unit A2
Santa Barbara, CA 93101
kari@krasdesignstudio.com

This document has been created by kras design studio, which retains all copyrights to the document. It may not be reproduced, distributed, displayed, modified or used by any other person for any purpose without the express written consent of the architect.

Revisions:

GENERAL NOTES

G0.02

10.10.19

FINISH NOTES

WALL & FLOOR FINISH NOTES

1. REFER TO FINISH PLANS AND TO SPECIFIC NOTES AND/OR SPECIFIC DETAILS THERON. ALSO, SEE CONSTRUCTION AND FIRE DEPARTMENT NOTES.
2. SUBMIT THREE (3) 12" x 12" PAINT SAMPLES OF ALL COLORS IN THE SPECIFIED FINISH FOR APPROVAL BY KRAS DESIGN STUDIO. SAMPLES SHALL BE SUBMITTED ON CARDBOARD DRAW DOWNS.
3. WALL FINISHES SHALL CONFORM TO LOCAL BUILDING CODES FOR FLAME SPREAD RATING.
4. WALL SURFACES SHALL BE PREPARED FOR PAINT. ALL PAINT SHALL BE APPLIED IN ACCORDANCE WITH MANUFACTURERE'S SPECIFICATIONS FOR THE PARTICULAR SURFACES PROVIDE MINIMUM TWO (2) COATS OF PAINT FINISHES OVER (1) COAT PRIMER (OR AS REQUIRED). REPAINT OR TOUCHUP AREAS, WHERE NECESSARY, PRIOR TO COMPLETION. FULL AREA REPAINTS ARE REQUIRED, SPOT TOUCHUPS WILL NOT BE ACCEPTED.
5. WALL SURFACES RECIEVING VINYL WALL COVERING SHALL RECIEVE ONE COAT OF SEALER AND/OR PRIMER COAT IN FLAT FINISH.
6. PAINT FINISH OF ALL WALLS & COLUMNS SHALL BE "EGGSHELL". ALL CEILINGS, FASCIAS & SOFFITS SHALL BE "FLAT", U.O.N.
7. PAINT FINISH OF ALL METAL PARTS, I.E., DOORS AND DOOR FRAMES, CONVECTOR ENCLOSURES, WINDOW FRAMES, METAL POCKETS, METAL TRIM (NOT SHOP FINISHED), ETC., SHALL BE SPRAYED ON ALKYD SEMI-GLOSS U.O.N. PAINT FINISH ON ALL WOOD DOORS, CASEWORK AND MILLWORK WHERE SPECIFIED IS TO BE SPRAYED-ON SEMI-GLOSS ENAMEL FINISH.
8. PAINT FINISH OF ALL METAL PARTS, I.E., DOORS AND DOOR FRAMES, CONVECTOR ENCLOSURES, WINDOW FRAMES, METAL POCKETS, METAL TRIM (NOT SHOP FINISHED), ETC., SHALL BE SPRAYED ON ALKYD SEMI-GLOSS U.O.N. PAINT FINISH ON ALL WOOD DOORS, CASEWORK AND MILLWORK WHERE SPECIFIED IS TO BE SPRAYED-ON SEMI-GLOSS ENAMEL FINISH.
9. WALL COVERING CONTRACTOR SHALL COORDINATE ALL WALL COVERING APPLICATION INOR ON CABINETWORK WITH CABINET CONTRACTOR.
10. ALL ACCESS PANELS SHALL BE PAINTED TO MATCH ADJACENT FINISHES U.O.N.
11. FLASH PATCHING OF ALL FLOORS WILL BE COMPLETE AND REVIEWED BY KRAS DESIGN STUDIO PRIOR TO THE INSTALLATION OF THE FLOOR FINISH. THE GENERAL CONTRACTOR NEEDS KRAS DESIGN STUDIO FINAL APPROVAL BEFORE PROCEEDING WITH THE INSTALLATION. IF THIS IS NOT RECIEVED, KRAS DESIGN STUDIO HAS THE RIGHT TO ASK THE GENERAL CONTRACTOR TO CORRECT THE PROBLEM AT NO ADDITIONAL COST.
12. FLASH PATCHING OF ALL FLOORS WILL BE COMPLETE AND REVIEWED BY KRAS DESIGN STUDIO PRIOR TO THE INSTALLATION OF THE FLOOR FINISH. THE GENERAL CONTRACTOR NEEDS KRAS DESIGN STUDIO FINAL APPROVAL BEFORE PROCEEDING WITH THE INSTALLATION. IF THIS IS NOT RECIEVED, KRAS DESIGN STUDIO HAS THE RIGHT TO ASK THE GENERAL CONTRACTOR TO CORRECT THE PROBLEM AT NO ADDITIONAL COST.
13. WHERE CARPETING MEETS VINYL OR TILE, PROVIDE MERCER (OR EQUAL) VINYL COMMERCIAL CARPET REDUCER MOLDING, U.O.N. FOR ALL OTHER CONNCETION DETAIL BETWEEN FLOORING MATERIALS.
14. WHERE CARPETING OCCURS IN DOORWAYS, LOCATE SEAMS UNDER CENTER OF DOOR.
15. CLOSETS ARE TO RECEIVE THE SAME FLOOR COVERING, PAINT AND CEILINGS AS THE ROOMS IN WHICH THEY OCCUR.
16. UNLESS OTHERWISE NOTED, PROVIDE RESISLENT BASE STRAIGHT AT ALL CARPETED COVE, AT ALL HARD FLOOR AND TILED AREAS. ALL BASES ARE TO BE MITERED AT INSIDE AND OUTSIDE CORNERS.
17. INSTALL WALL BASE AFTER WALL COVERING AND CARPETING.
18. FLOORING CONTRACTOR SHALL TEST THE FLOOR SLAB WHERE WOOD IS BEING INSTALLED FOR MOISTURE. IF REQUIRED, SEAL FLOOR SLAB WITH DECO-REZ, #3501M MOISTURE GUARD, OR APPROVED EQUAL BEFORE INSTALLATION OF WOOD FLOORING.
19. IN AREAS RECEIVING CERAMIC OR STONE TILE; GROUT IS TO MATCH FLOOR COLOR, U.O.N. WHERE EDGE OF TILE IS EXPOSED, USE MATCHING FINISH TRIM STRIP.
20. FLOORING CONTRACTOR SHALL PROVIDE SLIP RESISTANT FLOORING AS REQUIRED PER CODE. CONTRACTOR TO SUBMIT STONE SAMPLES FOR TESTING.
21. THE GENERAL CONTRACTOR WILL DOUBLE UP METAL STUDS AT ALL DOORS AND WINDOW OPENINGS UNLESS OTHERWISE NOTED. ALL PARTITIONS W/ MOVEMENT TO BE SECURED AND REINFORCED AS REQUIRED.
22. THE GENERAL CONTRACTOR WILL SUBMIT, FOR KRAS DESIGNS STUDIO'S APPROVAL, IN ADDITION TO THE SUBMITTALS DESCRIBED HEREIN, A COLOR CODED DRAWING INDICATING THE LAYOUT AND SEAMING OF ALL CARPET. GENERAL CONTRACTOR TO PROVIDE CREDIT FOR THIS SCOPE OF WORK IF DRAWINGS ARE NOT PROVIDED WHERE CARPET SEAM OCCURS IN DOORWAY, SEAMS ARE TO BE LOCATED DIRECTLY UNDER THE CENTER OF THE DOOR SO AS TO BE CONCEALED WHEN THE DOOR IS CLOSED. ALL SPECIAL INSTALLATIONS (I.E.-1/4 TURN, ETC.) ARE TO BE CLOSED.
23. RESILENT TILE FLOORING WILL BE INSTALLED ACCORDING TO THE MANUFACTURERS RECOMMENDATIONS WITH THE PATTERN RUNNING IN ONE DIRECTION U.O.N.. VERIFY PATTERN WITH KRAS DESIGN STUDIO, THE FLOORING SCOPE WILL BE REMOVED AND REINSTALLED IN THE REQUESTED PATTERN AT NO ADDITIONAL COST FLOORS ARE TO BE SEALED PER MANUFACTURERS RECOMMENDATIONS.
24. ALL JOINTS BETWEEN DIFFERENT AND SAME FLOORING MATERIALS ARE TO BE EXACTLY EVEN U.O.N.. GENERAL CONTRACTOR TO PROVIDE FLOOR PATCHES AS REQUIRED TO ACHIEVE THIS.
25. RESILIENT TILE FLOORS WILL BE GIVEN (MIN.) THREE (3) APPLICATIONS OF AN APPROVED NON-SLIP WAX THOROUGHLY MACHINE BUFFED, PRIOR TO THE PLACEMENT OF FURNITURE AND PRIOR TO THE OWNERS MOVE IN DATE. THE FLOOR FINISH IS TO BE APPROVED BY KRAS DESIGN STUDIO.
26. GENERAL CONTRACTOR SHALL PROVIDE A MINIMUM OF ONE (1) ADDITIONAL GALLON OF PAINT OF ALL WALL AND CEILING COLORS USED ON THE PROJECT TO THE OWNER FOR FUTURE TOUCHUP AS REQUIRED.
27. GENERAL CONTRACTOR SHALL PROVIDE ADDITIONAL 5% ATTIC STOCK VCT, SPECIAL CARPET (BROADLOOM OR TILE), GENERAL CARPET AND ALL ACCENT CARPET THROUGHOUT.
28. KRAS DESIGN STUDIO IS TO WALK THE SITE PRIOR TO THE APPLICATION OF THE FINISH WALL COMPOUND COAT AND MARK ALL DEFECTS CONTRACTOR SHALL OBTAIN KRAS DESIGN STUDIO'S WRITTEN APPROVAL OF ALL SURFACES BEFORE FINAL PAINT OR FINISH APPLICATION IS APPROVED.
29. WITHIN TWO (2) WEEKS AFTER COMPLETION AND TOTAL OCCUPANCY OF PREMISES, ALL SURFACES SHALL BE INSPECTED BY OWNER OR KRAS DESIGN STUDIO AND ANY NICKS SCRATCHED, AND/OR DEFECTS SHALL BE TOUCHED UP AS REQUIRED AT NO COST TO THE OWNER.
30. CONTRACTOR TO PROVIDE FLOOR LEVELING OF 1/4" IN 10'-0" (TYP.).
31. PROVIDE SHOP DRAWINGS ILLUSTRATING LOCATION AND INSTALLATION OF DETAILS FOR ALL STONE, CERAMIC, WOOD AND RUBBER/VINYL BASE.
32. FLOORING CONTRACTOR SHALL PROVIDE MATTE FINISH SEALER (2 COATS MIN.) ON ALL UNFINISHED TILE OR STONE FLOORING U.O.N.
33. CHECK THE DYE LOT AND PATTERN SEQUENCE PRIOR TO CUTTING. DO NOT MIX DYE LOTS OR DYE SERIES.
34. INSTALL CARPET WITH BACK MARKED ARROWS RUNNING IN THW SAME DIRECTION ALONG MARKING THREADS ON THE PRIMARY BAKING CONSISTENT ON LEFT OR RIGHT SIDE.
35. ALL CARPET INSTALLATIONS SHOULD BE INSTALLED ACCORDANCE WITH THE MINIMUM STANDARDS SET FORTH IN CPI 104-1966 STANDARD FOR INSTALLATION OF COMMERCIAL CARPET.
36. A COMPREHENSIVE SEAMING DIAGRAM MUST BE SUBMITTED AND APPROVED BY THE PURCHASING PARTIES BEFORE INSTALLATION.
37. ALL ADJOINED AND SEAMED EDGES OF CARPET SHALL BE SEALED WITH 1/8" BEAD OF SOLVENT OR EVA ACRYLIC SEAM SEALER (CRI 104-1996, 8.5 AND 9.5) THIS BEAM OF SEALER MUST BE APPLIED TO THE PRIMARY YARN BUNDLE AND SECONDARY BAC LEVEL SO THAT IT TRANSFERES TO THE ADJACENT EDGE AND BONDS THE EDGES THUS PREVENTING UNRAVELLING. SEAM SEALER SHOULD NEVER CONTACT THE FACE OF FIBERS.
38. LENGTH SEAM PREPARATION MUCH BE MADE BY ROW CUTTING THE CARPET AT A SPECIFIC POINT THAT WILL ALLOW A PATTERN MATCH WITH ADJOINING SHEETS. USE AN AWL, SCREWDRIVER OR SIMILAR TOOL TO "RUN THE ROW" WHICH SEPARATES THE STITCH ROWS TO BE CUT BETWEEN. CUT CARPET WITH A LOOP PILE CUTTER OR CUSHION BACK CUTTER. DO NOT TRACE OR DOUBLE CUT PRODUCTS.
39. SUBMIT (3) SAMPLES OF ALL FINISH MATERIALS (STONE, CARPET, WOOD, ETC.) FOR REVIEW BY KRAS DESIGN STUDIO.
40. GENERAL CONTRACTOR SHALL BE RESPONSIBLE TO REWORK THE HEAD TRACK FOR EXTERIOR WINDOW COVERINGS AT AREAS WHERE PARTITIONS HAVE BEEN DEMOLISHED (AS OCCURS).

FINISH NOTES (CONT'D.)

CASEWORK & MILLWORK NOTES

1. ALL CUSTOM CABINET OR MILLWORK SHALL FURNISHED, DELIVERED AND INSTALLED BY CABINET CONTRACTOR.
2. MILLWORK CONTRACTOR TO VERIFY AND BE RESPONSIBLE FOR FIELD VERIFICATION OF ALL SITE CONDITIONS, DIMENSIONS AND DELIVERY ACCESS PRIOR TO INSTALLATION. IF WALL MOVEMENT OCCURS IT IS THE CONTRACOTRS RESPONSIBILITY TO COORDINATE THESE FIELD CONDITIONS.
3. MILLWORK CONTRACTOR TO COORDINATE WITH PARTITION CONTRACTOR TO VERIFY SIZE AND PLACEMENT OF BLOCKING AS REQUIRED TO SUPPORT WALL HUNG CABINETS.
4. ALL MILLWORK BLOCKING, GROUNDS AND ROUGH BLOCKS TO BE FIRE RETARDANT TREATED IN ACCORDANCE WITH LOCAL MUNICIPAL CODES.
5. WHERE ELECTRICAL WORK IS SPECIFIED IN CONJUCTION WITH CABINETWORK, LAMPS AND FIXTURES ARE TO BE PROVIDED BY THE ELECTRICAL CONTRACTOR, CUTOUTS FOR SWITCHES, OUTLETS, ETC., SHALL BE PROVIDED BY THE MILLWORK CONTRACTOR AND COORDINATED WITH THE ELECTRICAL CONTRACTOR. VERIFY EXACT PLACEMENT OF ALL GROMMETS IN THE FIELD WITH KRAS DESIGN STUDIO.
6. MILLWORK CONTRACTOR SHALL SUBMIT SHOP FABRICATION DRAWINGS (ONE TRASPARENCY AND THREE BLUE LINE PRINT OF EACH DRAWING) FOR APPROVAL BY KRAS DESIGN STUDIO PRIOR TO ANY FABRICATION.
7. THE APPROVAL OF SHOP DRAWINGS SHALL BE GENERAL AND/OR FOR AESTHETIC INTERPRETATION; AND EXCEPT AS OTHERWISE INDICATED, SHALL NOT BE CONSTRUED AS PERMITTING ANY DEPARTURE FROM CONTRACT OR LEASE REQUIREMENTS, RELIEVING THE CONTRACTOR OF RESPONSIBILITY FOR ANY ERROR IN DETAILS DIMENSIONS, OR OTHER ADDITIONAL DETAILS OR INSTRUCTIONS PREVIOULSY FURNISHED BY KRAS DESIGN STUDIO.
8. ALL MILLWORK SHALL BE FABRICATED OF MINIMUM 3/4 INCH STOCK WITH HARDWOOD EDGES, U.O.N.
9. ALL PLASTIC LAMINATE TOPS AND FACES TO HAVE BALANCING BACKER SHEETS.
10. MILLWORK CONTRACTOR SHALL SUBMIT ALL PAINT, WOOD AND SPECIAL FINISH SAMPLES IN TRIPLICATE FOR APPROVAL BY KRAS DESIGN STUDIO PRIOR TO FABRICATION.
12. ALL MILLWORK SHALL BE FINISHED IN SHOP WITH NECESSARY TOUCH-UP TO BE PREFORMED ON JOB SITE AFTER INSTALLATION.
13. ALL MILLWORK TO BE MANUFACTURED IN ACCORDANCE WITH THE WIC MANUAL OF MILLWORK;

    A. PREMIUM GRADE CONSTRCTION, U.O.N., FOR ALL HARDWOOD AND VENEER FINISHED MILLWORK.
    B. CUSTOM GRADE CONSTRUCTION, U.O.N., FOR ALL PLASTIC LAMINATE FINISH MILLWORK EXCEPTION BELOW.
    EXCEPTION TO 13B. INTERIOR FACES OF HINGED DOORS SHALL BE FACED WITH THE SAME LAMINATE AS THE EXPOSED SURFACES.
14. HARDWARE SPECIFICATIONS (U.O.N., SEE M,ASTER LEGEND):

    A. PULLS 4". "WIRE PULLS" SATIN CHROME.
    B. HINGES FULLY CONSEALED, 180 CLOSING.
    C. DRAWER SIDES, 75 LB. CAPACITIES, FULL EXTENSION.
15. UNLESS OTHERWISE NOTED, INTERIOR FINISHES OF HARDWARE FINISHED CABINETRY SHALL MATCH EXTERIOR FINISH. INTERIOR FINISHES OF PLASTIC LAMINATE CABINETRY SHALL BE:
    A. PLASTIC LAMINATE TO MATCH EXTERIOR FOR ALL OPEN CABINETS.
    B. WHITE "MELAMINE" OR "KORTRON" FINISH FOR ALL ENCLOSED CABINETS.
16. CONTRACTOR TO UNDERCUT ALL DOORS AS REQUIRED FOR PROPER OPERATION.
17. STORAGE COAT CLOSET SHELVING AND OTHER SOLID MILLWORK SHALL RECEIVE MIN. THREE (3) COATS OF LAQUER OR POLYURETHANE FINISH OR PER MANUFACTURER'S SPECS WHICH EVER IS GREATER U.O.N.
18. CONTRACTOR TO PROVIDE MIN. 24" x 24" MOCK-UP OF ALL PATTERNED WOOD/WOOD PANEL DESIGNS THROUGHOUT THE PROJECT FOR APPROVAL PRIOR TO THE COMMENCEMENT OF WORK.
19. ALL WOOD DOORS SHALL BE EDGE BANDED. BANDING TO PROVIDE TIGHT SEAMS W/ NO VENEER OVERLAPS.
20. ALL REVEALS IN WOOD PANELING SHALL HAVE WOOD REVEALS W/ FINISH TO MATCH PANELING. (U.O.N.)

DEMOLITION NOTES

1. THE CONTRACTOR SHALL BE RESPONSIBLE FOR ALL REQUIRED PERMITS FOR DEMOLITION WORK.
2. THE CONTRACTOR SHALL VISIT AND EXAMINE THE SITE, AND SHALL FULLY INFORM THEMSELVES AS TO ALL THE EXISTING CONDITIONS AND LIMITATIONS.
3. THE CONTRACTOR SHALL BE RESPONSIBLE FOR CONSTRUCTING ALL REQUIRED PEDESTRIAN PROTECTION, INCLUDING FENCES AND CANOPY; FOR CAPPING EXISTING SEWER LINES, ELECTRICAL CONDUITS, ETC. AND SHALL HAVE THE ABOVE ITEMS INSPECTED PRIOR TO STARTING ANY DEMOLITION.
4. THE CONTRACTOR SHALL BE RESPONSIBLE FOR OBEYING ALL STANDARD OSHA SAFETY RULES AS SET FORTH IN THE OSHA (STATE OF CALIFORNIA) CONSTRUCTION SAFETY ORDERS.
5. THE CONTRACTOR SHALL BE RESPONSIBLE FOR ERECTING ALL TEMPORARY SHORING, BRACING,ETC., FOR EXISTING CONSTRUCTION TO REMAIN. DESIGN OF ALL TEMPORARY SUPPORTS SHALL CONSIDER ALL DEAD LOADS, LIVE LOADS, IMPACT LOADS, ETC., PER C.B.C.
6. THE CONTRACTOR SHALL BE RESPONSIBLE FOR DETERMINING THE ORDER OF WORK TO BE PERFORMED FOR SHORING, DEMOLITION, AND NEW CONSTRUCTION FOR THE ENTIRE PROJECT. THE CONTRACTOR SHALL COORDINATE AND BE RESPONSIBLE FOR THE DISCONNECTION AND CAPPING OF ALL AFFECTED UTILITY SERVICES. ALL DISCONNECTIONS SHALL BE DONE IN ACCORDANCE WITH THE REGULATIONS OF THE UTILITY CONCERNED. CAP ALL UTILITIES BELOW GRADE.
7. THE CONTRACTOR SHALL COORDINATE THE WORK TO MINIMIZE THE INTERUPTION OF UTILITY SERVICES, PARTICULARLY WATER, GAS, ELECTRIC, SEWER AND TELEPHONE SERVICES. WHEN POSSIBLE, INTERRUPTIONS TO SERVICES SHALL BE MADE DURING NON-OPERATING HOURS. SHOULD IT BE NECESSARY TO SHUT DOWN SERVICES DURING OPERATING HOURS, THE CONTRACTOR IS REQUIRED TO GIVE THE OWNER'S REPRESENTATIVE 24 HOURS WRITTEN NOTICE, AND BE LIMITED TO 30 MINUTE TIME INTERVALS, UNLESS OTHER ARRANGEMENTS ARE MUTUALLY AGREED UPON IN ADVANCE.
8. PROVIDE ADEQUATE PROTECTION TO EXISTING FACILITIES AND AREAS NOT REQUIRED TO BE ALTERED. EXECUTE THE WORK IN SUCH A MANNER SO AS TO AVOID INTERFERENCE WITH THE USE OF, OR PASSAGE TO AND FROM ADJOINING BUILDINGS AND FACILITIES.
9. PERFORM ALL DEMOLITION AND REMOVAL OF WORK INDECATED ON DRAWINGS. SAWCUTS ARE REQUIRED AT THE BOUNDARIES OF CONCRETE, ASPHALT, AND MASONRY BLOCK WORK, TO BE REMOVED.
10. EXPLOSIVE, BLASTING, BURNING OF MATERIALS AND DEBRIS WILL NOT BE PERMITTED ON THE SITE.
11. ITEMS NOT DESIGNATED FOR RETENTION BY THE OWNER BECOME THE PROPERTY OF THE CONTRACTOR, WHO SHALL REMOVE SAME FROM THE SITE. VERIFY 48 HOURS PRIOR TO COMMENCING DEMOLITION WHETHER THERE ARE ANY OWNERS CLAIMED ITEMS TO THE SITE STORAGE AREA DESIGNATED BY THE OWNER.
12. CLEAN-UP; DURING THE DEMOLITION WORK, CONTRACTOR SHALL REMOVE ALL DEMOLISHED PARTS, TRASH AND DIRT IN THE MANNER WHICH WILL LIMIT THE SPREAD OF DIRT AND DUST TO THE OTHER AREAS OF THE SITE. DIRECT TRASH AND DUST SPREAD TO OTHER AREAS SHALL BE CLEANED AND REMOVED FROM THE SITE BY THE CONTRACTOR. UPON COMPLETION OF WORK HEREIN SPECIFIED, ALL AFFECTED AREAS WILL BE LEFT THOROUGHLY CLEAN AND IN A SAFE CONDITION, FREE FROM MATERIALS OR EQUIPMENT EXCEPT SALVAGED MATERIALS TO BE RETAINED BY THE OWNER.
13. HAZARDOUS MATERIALS: UNLESS OTHERWISE PROVIDED, THE ENGINEER AND HIS CONSULTANTS SHALL HAVE NO RESPONSIBILITY FOR THE DISCOVERY, PRESENCE, HANDLING, REMOVAL OR DISPOSAL OF OR EXPOSURE OF PERSONS TO HAZARDOUS MATERIALS IN ANY FORM AT THE PROJECT SITE, INCLUDING BUT NOT LIMITED TO ASBESTOS, ASBESTOS PRODUCTS, POLYCHLORINATED BIPHENYL (PCB) OR OTHER TOXIC SUBSTANCES.

FIRE DEPARTMENT NOTES

GENERAL NOTICE

1. PORTABLE FIRE EXTINQUISHERS ARE REQUIRED ON THE PROJECT SITE AT ALL TIMES DURING CONSTRUCTION.

PRIOR TO OCCUPANCY CLEARANCE
THE FOLLOWING CONDITIONS SHALL BE MET

2. CREATE A DEFENSIBLE SPACE OF 100 FEET (OR TO THE PROPERTY LINE, WHICHEVER IS NEARER) AROUND THE PROPOSED STRUCTURES AND ANY EXISTING STRUCTURES ON THIS PROPERTY.
    - REMOVAL DOES NOT APPLY TO SINGLE SPECIMEN OF TREES, ORNAMENTAL SHRUBBERY OR SIMILAR PLANTS THAT ARE USED AS GROUND COVER IF THEY DO NOT FORM A MEANS OF RAPIDLY TRANSMITTING FIRE FROM THE NATIVE GROWTH TO ANY STRUCTURE.
3. ACCESS SHALL BE AS SHOWN ON PLANS RECEIVED MAY 16, 2017 AND APPROVED JUNE 16, 2017.
    - DRIVEWAY SHALL BE A MINIMUM WIDTH OF 12 FEET.
    - ACCESS WAYS SHALL BE UNOBSTRUCTED AND EXTENDED TO WITHIN 150 FEET OF ALL PORTIONS OF THE EXTERIOR WALLS OF THE FIRST STORY OF ANY BUILDING.
    - A MINIMUM OF 15 FEET OF VERTICAL CLEARANCE SHALL BE PROVIDED AND MAINTAINED FOR THE LIFE OF THE PROJECT FOR EMERGENCY APPARATUS ACCESS.
4. AN AUTOMATIC FIRE SPRINKLER SYSTEM SHALL BE INSTALLED IN THE EXISTING MAIN RESIDENCE, THE TWO-STORY RESIDENTIAL ADDITION AND ATTACHED GARAGE.
    - FIRE SPRINKLER PLANS SHALL BE APPROVED BY THE FIRE DEPARTMENT PRIOR TO INSTALLATION.
    - A SET OF APPROVED PLANS, STAMPED AND DATED BY THE FIRE DEPARTMENT SHALL BE KEPT AT THE JOB SITE AND AVAILABLE UPON REQUEST.
    - WATER SYSTEMS SHALL BE INSTALLED EXACTLY AS THE APPROVED PLANS DICTATE. NO CHANGES OR MODIFICATIONS TO THESE PLANS SHALL TAKE PLACE WITHOUT PRIOR FIRE DEPARTMENT APPROVAL.
    - NO WORK SHALL BE COVERED OR OTHERWISE RENDERED INACCESSIBLE OR UNVIEWABLE PRIOR TO INSPECTION BY THE FIRE DEPARTMENT.
5. BECAUSE A FIRE SPRINKLER SYSTEM SHALL BE INSTALLED, THE FOLLOWING ACCEPTANCE TESTING IS REQUIRED.
    - PRIOR TO COVERING ANY PIPES, THE SPRINKLER SYSTEM SHALL BE INSPECTED AT THE ROUGH PLUMBING STAGE (I.E., EXPOSED PIPE, FITTINGS, HANGARS, AND BRACING STAGE) BY THE FIRE DEPARTMENT INSPECTOR.
    - A FUNCTION TEST (AKA BUCKET TEST) SHALL BE WITNESSED BY THE FIRE DEPARTMENT INSPECTOR. THE SYSTEM SHALL MEET THE REQUIRED FLOW RATE AS INDICATED ON THE SUBMITTED SPRINKLER PLANS.
6. ADDRESS NUMBERS SHALL BE A MINIMUM HEIGHT OF FOUR (4) INCHES.
    - ADDRESS NUMBER LOCATION(S) SHALL BE APPROVED BY THE FIRE DEPARTMENT.
    - ADDRESS NUMBER SHALL BE A COLOR CONTRASTING WITH THE BACKROUND COLOR.
    - THE ADDRESS NUMBER SHALL BE ELEVATED AT LEAST THREE FEET FROM THE GROUND FOR CLEAR VISIBILITY AND EASY DIRECTIONAL IDENTIFICATION.
    - THE NUMBERS SHALL BE VISIBLE FROM THE ACCESS ROAD WHEN TRAVELLING IN EITHER DIRECTION.
7. THE APPLICANT WILL BE REQUIRED TO PAY FIRE DEPARTMENT DEVELOPMENT IMPACT MITIGATION FEES. IN ACCORDANCE WITH CHAPTER 15 OF THE SANTA BARBARA COUNTY CODE, THE FEE SHALL BE COMPUTED PER ADDITIONAL SQUARE FOOT OF OCCUPIED SPACE.
    - PAYMENT SHALL BE MADE ACCORDING TO THE SCHEDULE OF FEES IN PLACE ON THE DATE FEES ARE PAID. AS OF THE DATE OF THIS LETTER, FEES CURRENTLY ARE AS FOLLOWS:

      RESIDENTIAL-SINGLE FAMILY HOUSING $0.59 PER SQUARE FOOT
    - FINAL OCCUPANCY CLEARANCE INSPECTION WILL NOT BE SCHEDULED UNLESS FEES HAVE BEEN PAID.

BEST MANAGEMENT PRACTICES

1. ERODED SEDIMENTS AND OTHER POLLUTANTS MUST BE RETAINED ON SITE AND MAY NOT BE TRANSPORTED FROM SITE VIA SHEET FLOW, SWALES, AREA DRAINS, NATURAL DRAINAGE COURSES OR WIND.
2. STOCKPILES OF EARTH AND OTHER CONSTRUCTION RELATED MATERIALS MUST BE PROTECTED FROM BEING TRANSPORTED FROM THE SITE BY THE FORCES OF WIND OR WATER. THIS INCLUDES SAND FOR STUCCO, DRYWALL DEMOLITION DEBRIS, DRYWALL 'MUD" PACKAGING, ETC.
3. FUELS, OILS, SOLVENTS AND OTHER TOXIC MATERIALS MUST BE STORED IN ACCORDANCE WITH THEIR LISTING AND ARE NOT TO CONTAMINATE THE SOIL AND SURFACE WATERS. ALL APPROVED STORAGE CONTAINERS ARE TO BE PROTECTED FROM THE WEATHER. SPILLS MAY NOT BE WASHED INTO THE DRAINAGE SYSTEM.
4. EXCESS OR WASTE CONCRETE MAY NOT BE WASHED INTO THE PUBLIC WAY OR ANY OTHER DRAINAGE SYSTEM. PROVISIONS MUST BE MADE TO RETAIN CONCRETE WASTES ON SITE UNTIL THEY CAN BE DISPOSED OF AS A SOLID WASTE.
5. TRASH AND CONSTRUCTION RELATED WASTES MUST BE DEPOSITED INTO A COVERED RECEPTACLE TO PREVENT CONTAMINATION OF RAINWATER AND DISPERSAL BY WIND.
6. SEDIMENTS AND OTHER MATERIAL MAY NOT BE TRACED FROM THE SITE BY VEHICLE TRAFFIC. THE CONSTRUCTION ENTRANCE ROADWAYS MUST BE STABILIZED SO AS TO INHIBIT SEDIMENTS FROM BEING DEPOSITED INTO THE PUBLIC WAY. ACCIDENTAL DEPOSITIONS MUST BE SWEPT UP IMMEDIATELY AND MAY NOT BE WASHED DOWN BY RAIN OR OTHER MEANS.
7. ANY SLOPES WITH DISTURBED SOILS OR DEMANDED OF VEGETATION MUST BE STABILIZED SO AS TO INHIBIT EROSION BY WIND AND WATER.
8. NON-STORM WATER RUNOFF FROM EQUIPMENT AND VEHICLE WASHING AND ANY OTHER ACTIVITY SHALL BE CONTAINED AT THE SITE.

GENERAL NOTES

1. SCOPE OF DOCUMENTS

THESE PLANS ARE THE PROPERTY OF **KRAS DESIGN STUDIO**. USE OR COPY IS PERMITTED BY CONTACT ONLY. ANY REVISIONS TO THESE PLANS, REGARDLESS OF SCOPE WITHOUT WRITTEN PERMISSION OF **KRAS DESIGN STUDIO** IS PROHIBITED AND THEREBY ABSOLVE **KRAS DESIGN STUDIO** FROM ANY LIABILITY, CLAIMS SUITS OR LITIGATION BY ANY INTEREST PARTIES IN THE PROJECT.

THESE DRAWINGS INDICATE THE GENERAL SCOPE OF THE PROJECT IN TERMS OF THE ARCHITECTURAL DESIGN INTENT, THE DIMENSIONS OF THE BUILDING, THE MAJOR ARCHITECTURAL ELEMENTS AND THE TYPE OF STRUCTURAL, MECHANICAL, AND ELECTRICAL SYSTEMS, ON THE BASIS OF THE GENERAL SCOPE INDICATED OR DESCRIBED. DECISIONS OF THE ARCHITECT AS TO THE ITEMS OF WORK INCLUDED WITH THE SCOPE OF THESE DOCUMENTS SHALL BE FINAL AND BINDING ON THE CONTRACTOR. FRAMING AND FINISH WORK TO MATCH EXISTING WILL BE PROVIDED WHETHER SPECIFICALLY CALL FOR OR NOT WHERE EQUIPMENT OR ITEMS ARE REMOVED. THE CONTRACTOR SHALL FURNISH ALL ITEMS REQUIRED FOR THE PROPER EXECUTION AND COMPLETION OF THE WORK. WHERE HEREAFTER DESCRIBED, "PROVIDED" MEANS TO PROVIDE AND INSTALL.

CONSTRUCTION FROM DRAWINGS: THIS BUILDING STRUCTURE & FOUNDATION SHALL BE BUILT FROM THE STRUCTURAL DRAWINGS. ANY CONFLICTS BETWEEN THE STRUCTURAL, ARCHITECTURAL, PLUMBING, MECHANICAL, ELECTRICAL, ETC. SHALL BE BROUGHT TO THE ATTENTION OF THE ARCHITECT TWO DAYS PRIOR TO LAYOUT OF ANY PORTION IN CONFLICT. WHEN THERE ARE STRUCTURAL DRAWINGS, ARCHITECTURAL DRAWINGS SHALL BE USED FOR REFERENCE ONLY; STRUCTURAL DRAWINGS SHALL GOVERN.

2. INTERPRETATIONS AND MISUNDERSTANDINGS

WORK NOT CLEARLY DETAILED, SHOWN OR SPECIFIED SHALL BE SAME AS SIMILAR PARTS THAT ARE SHOWN OR SPECIFIED. LARGE SCALE DRAWINGS SHALL TAKE PRECEDENCE OVER SMALLER SCALE DRAWINGS. SPECIFICATIONS SHALL GOVERN AS TO MATERIALS, WORKMANSHIP, AND INSTALLATION PROCEDURES. IF CONTRACTOR OBSERVES THAT DRAWINGS AND SPECIFICATIONS ARE IN CONFLICT, HE OR SHE SHALL PROMPTLY NOTIFY THE ARCHITECT IN WRITING.

WHEN DETAIL OR INFORMATION IS NOT CLEAR, THE CONTRACTOR SHALL ASK FOR CLARIFICATION DURING BIDDING (10 DAYS MIN. PRIOR TO CLOSE OF BIDS) OR CONSTRUCT PER THE ARCHITECTS CLARIFICATION WHEN MADE DURING CONSTRUCTION.

3. CONFLICTS WITHIN CONTRACT DOCUMENTS

THE CONTRACTOR SHALL VERIFY ALL DIMENSIONS AND SITE CONDITIONS BEFORE STARTING WORK. SHOULD A DISCREPENCY BE IDENTIFIED IN THE SPECIFICATIONS OR DRAWINGS, OR IN THE WORK DONE BY OTHERS FROM THE CONTRACT DOCUMENTS THAT AFFECT ANY WORK, NOTIFY THE ARCHITECT AT ONCE FOR INSTRUCTION ON HOW TO PROCEED. IF THE CONTRACTOR PROCEEDS WITH THE WORK AFFECTED WITHOUT INSTRUCTIONS FROM THE ARCHITECT, THE CONTRACTOR SHALL MAKE GOOD ANY RESULTING DAMAGE OR DEFECT TO THE SATISFACTION OF THE ARCHITECT. SHOULD A CONFLICT OCCUR IN OR BETWEEN DRAWINGS AND SPECIFICATIONS, OR WHERE DETAIL REFERENCES ON CONTRACT DRAWINGS HAVE BEEN OMMITTED, THE CONTRACTOR IS DEEMED TO HAVE ESTIMATED THE MOST EXPENSIVE MATERIALS AND CONSTRUCTION METHOD INVOLVED, UNLESS A WRITTEN DECISION FROM THE ARCHITECT HAS BEEN OBTAINED WHICH DESCRIBES AN ALTERNATE METHOD AND/OR MATERIALS.

4. SUBSTITUTIONS AND ALTERNATE DESIGN CONCEPTS

COSTS FOR EVALUATION OR STUDY BY THE ARCHITECT OR ENGINEER OF SUBSTITUTED MATERIALS OR METHODS OF CONSTRUCTION SHALL BE THE RESPONSIBILITY OF THE CONTRACTOR OR THE ORIGINATOR OF THE ALTERNATE.

5. CHANGES

NO CHANGE IS APPROVED BY THE ARCHITECT OR ENGINEER UNLESS DEFINED AND DETAILED IN WRITING AND/OR BY DRAWING CHANGE NOTICE (DCN). ANY VERBAL COMMENTS BY PHONE OR IN PERSON ARE NOT CONSIDERED BINDING. THE CONTRACTOR WILL TAKE ALL RESPONSIBILITY FOR ALL CHANGES NOT APPROVED IN WRITING BY THE ARCHITECT AND/OR THE ENGINEER.

6. OWNER AND TENANT CONSIDERATIONS

THE FOLLOWING ARE INSTRUCTIONS FOR THE WORK TO BE PERFORMED IN OR AROUND EXISTING BUILDINGS AND IN SITUATIONS WHERE THE OWNER OCCUPIES THE BUILDING PRIOR TO COMPLETION:

A. CONTRACTOR SHALL CONDUCT ALL HIS OPERATIONS IN A MANNER TO AFFORD NO HAZARD TO OWNER'S PERSONNEL OR VISITORS. THE CONTRACTOR WILL BE REQUIRED TO COOPERATE WITH OWNER IN SCHEDULING NEW CONSTRUCTION SO THAT INTERRUPTIONS OR NORMAL USAGE OF EXISTING STRUCTURE WILL BE KEPT TO A MINIMUM.

B. CONTRACTOR SHALL NOT DISRUPT EXISTING SERVICES AND/OR UTILITIES FOR ANY REASON WITHOUT OBTAINING OWNER'S PRIOR APPROVAL AND INSTRUCTION IN EACH CASE. CONTRACTOR MUST CONFORM TO OWNER'S REQUIREMENTS AS TO THE EXACT TIME SUCH INTERRUPTIONS CAN BE ALLOWED AND THE LENGTH OF TIME THE UTILITY / SERVICES CAN BE SHUT OFF. OWNER MAY REQUIRE UTILITY SHUT DOWN TIMES AT NIGHT OR WEEKENDS.

C. CONTRACTOR WILL BE ALLOWED LIMITED ACCESS TO REQUIRED AREAS IN ORDER TO FIELD MEASURE, DEVELOP SHOP DRAWINGS AND VERIFY EXISTING CONDITIONS IN ORDER TO MAKE FULL USE OF THE CONSTRUCTION PERIOD.

D. CONTRACTOR IS NOTIFIED THAT THE OWNER'S BUSINESS WILL BE IN OPERATION DURING CONSTRUCTION, AND THAT THE CONTRACTOR SHALL PROVIDE TEMPORARY BARRICADES AND/OR PARTITIONS TO MAINTAIN SECURITY AND WEATHERPROOFING OR OWNER'S STRUCTURE.

7. DIMENSIONS

A. ALL DIMENSIONS SHALL TAKE PRECEDENCE OVER SCALE. THE DRAWINGS SHALL NEVER BE SCALED. THE ARCHITECT SHALL BE CONTACTED FOR INCORRECT OR MISSING DIMENSIONS.

B. ALL DIMENSIONS ARE TO FACE OF FRAMING UNLESS OTHERWISE NOTED.

C. CEILING HEIGHT DIMENSIONS ARE FROM FINISH FLOOR SLAB TO FINISH FACE OF CEILING OR CEILING GRID.

D. ALL DIMENSIONS ON PLANS FOR ANY BUILT-IN SYSTEM (STOREFRONT, CABINETS, SEATING, TOILET PARTITIONS, ETC.) ARE FOR BIDDING PURPOSES ONLY. EXACT DIMENSIONS SHALL BE TAKEN AT THE SITE WITH WALLS IN PLACE PRIOR TO MANUFACTURING AND INSTALLATION.

8. EQUIPMENT LOCATIONS

A. THE LOCATIONS OF APPARATUS AND EQUIPMENT INDICATED ON THE DRAWINGS ARE SCHEMATIC ONLY, AND SHALL BE MODIFIED TO MEET THE EXISTING ARCHITECTURAL, MECHANICAL AND STRUCTURAL CODES AND CONDITIONS AS REQUIRED WITHOUT ADDITIONAL COST TO THE OWNER.

B. THE CONTRACTOR SHALL INSTALL ALL PIPING AND EQUIPMENT IN A PROPER MANNER AND IN LOCATIONS AVOIDING ALL OBSTRUCTIONS, PRESERVING HEADROOM AND KEEPING OPENINGS AND PASSAGEWAYS CLEAR. THE CONTRACTOR SHALL MAKE CHANGES, WITH OWNER'S APPROVAL, IN LOCATIONS OF EQUIPMENT AND MATERIALS, WHICH MAY BE NECESSARY IN ORDER TO ACCOMPLISH THESE ENDS, WITHOUT ADDITIONAL COST TO THE OWNER.

C. THE MECHANICAL AND ELECTRICAL DRAWINGS ARE DIAGRAMMATIC TO THE EXTENT THAT OFFSETS, BENDS, SPECIAL FITTINGS AND EXACT LOCATIONS ARE NOT INDICATED. THE CONTRACTOR SHALL CAREFULLY STUDY THE DRAWINGS, AND THE PREMISES, IN ORDER TO DETERMINE THE BEST METHODS, EXACT LOCATION, ROUTES, BUILDING OBSTRUCTIONS, ETC. THE CONTRACTOR SHALL INCLUDE THE INSTALLATION OF ALL EQUIPMENT IN AVAILABLE LOCATIONS. WHERE CHANGES IN LOCATION ARE SIGNIFICANT, REVISIONS SHALL BE ISSUED AS A CHANGE ORDER. ANY

D. ALL DISCIPLINES SHALL COORDINATE THEIR MATERIAL AND EQUIPMENT LOCATIONS IN THE ELECTRONICS AND ELECTRICAL ROOMS WITH THE CURRENT REVISION OF R.E. WALL ELECTRICAL DRAWINGS.

9. SHOP DRAWINGS / SUBMITTALS

CONTRACTOR SHALL VERIFY ALL FIELD DIMENSIONS FOR EXISTING CONDITIONS ON THE CONTRACT DOCUMENTS. THE CONTRACTOR SHALL SUBMIT COPIESTO THE ARCHITECT/ENGINEER OF ALL FABRICATION AND PLACEMENT DRAWINGS, SCHEDULES, AND MATERIALS LIST REQUIRED FOR THE WORKS OF VARIOUS TRADES. SUBMITTALS SHALL BE REVIEWED FOR COMPLETENESS AND STAMPED BY THE CONTRACTOR PRIOR TO DELIVERY TO THE ARCHITECT/ENGINEER. THIS SHALL BE DONE WITH SUCH PROMPTNESS AS TO CAUSE NO DELAY IN HIS OWN WORK OR IN THAT OF ANY OTHER CONTRACTOR. ALL SUBSTITUTIONS AND/OR DEVIATIONS SHALL REQUIRE WRITTEN APPROVAL BY THE ARCHITECT/ENGINEER. THE ARCHITECT/ENGINEER SHALL REVIEW SUCH SHOP DRAWINGS/SUBMITTALS ONLY FOR CONFORMANCE WITH THE DESIGN INTENT OF THE PROJECT, AND COMPLIANCE WITH INFORMATION GIVEN IN THE CONTRACT DOCUMENTS. THE CONTRACTOR SHALL MAKE ANY CORRECTIONS REQUIRED BY THE ARCHITECT/ENGINEER, RETAIN FILE COPIES AND FURNISH SUCH OTHER COPIES AS MAY BE NEEDED FOR CONSTRUCTION. THE ARCHITECT/ENGINEER'S ACCEPTANCE OF SUCH DRAWINGS OR SPECIFICATIONS SHALL NOT RELIEVE THE CONTRACTOR FROM RESPONSIBILITY FOR DEVEIATIONS AND ERRORS IN SHOP DRAWINGS/SUBMITTALS OR SCHEDULE REQUIREMENTS. SUBMITTALS SHALL BE SENT TO THE ARCHITEC/ENGINEER AS FOLLOWS:

A. WHEN REQUESTED BY ARCHITECT/ENGINEER

B. WHEN REQUIRED PER THE CONTRACT DOCUMENTS.

C. FOR APPROVAL OF DEVIATIONS OR CLARIFICATION OF THE SPECIFIED DESIGN.

D. FOR APPROVAL OF "OR EQUALS".

10. CODES

ALL CONSTRUCTION AND MATERIALS SHALL COMPLY WITH THE MOST RESTRICTIVE REQUIREMENTS OF APPLICABLE CODES INCLUDING BUT NOT LIMITED TO TITLE-24 CEC, THE LATEST ADOPTION OF THE CBC, LOCAL CODES AND AUTHORITIES. ALL CODES REFERRED TO IN THESE DOCUMENTS SHALL BE UNDERSTOOD TO MEAN THE LATEST ADOPTED EDITION.

11. EXIT AND EXIT SIGNS

ALL LEGAL EXIT DOORS SHALL BE OPERABLE FROM THE INSIDE WITHOUT THE USE OF A KEY OR SPECIAL KNOWLEDGE OR EFFORT. ILLUMINATED EXIT SIGNS SHALL BE PROVIDED PER THE REQUIREMENTS OF CBC CHAPTER 10 AND PER TITLE 24 CAC. ALL DOORS SHALL SWING IN THE DIRECTION OR EXIT, PER THE REQUIREMENTS OF CBC CHAPTER 10.

GENERAL NOTES (CONT'D.)

12. SECURITY REQUIREMENTS

SWINGING DOORS:

A. ALL PIN-TYPE HINGES WHICH ARE ACCESSIBLE FROM OUTSIDE THE SECURED AREA WHEN THE DOOR IS CLOSED SHALL HAVE NON REMOVABLE HINGE PINS. IN ADDITION, THEY SHALL HAVE A MINIMUM 1/4 INCH DIAMETER STEEL JAMB STUDS WITH 1/4 INCH MINIMUM PROJECTION UNLESS THE HINGES ARE SHAPED TO PREVENT REMOVAL OF THE DOOR IF THE HINGE PINS ARE REMOVED.

B. THE STRIKE PLATE FOR LATCHES AND THE HOLDING DEVICE FOR PROJECTING DEAD BOLTS IN WOOD CONSTRUCTION SHALL BE SECURED TO THE JAMB AND THE WALL FRAMING WITH SCREWS NOT LESS THAN 2 1/2 INCHES IN LENGTH.

C. DEAD BOLTS SHALL CONTAIN HARDENED INSERTS.

D. STRAIGHT DEAD BOLTS SHALL HAVE A MINIMUM THROW OF 1 INCH AND AN EMBEDMENT OF NOT LESS THAT 5/8 INCH.

E. A HOOK-SHAPED OR AN EXPANDING-LUG DEADBOLT SHALL HAVE A MINIMUM THROW OF 3/4 INCH.

F. FERROUS METAL DOORS SHALL HAVE SURFACES NOT LESS THAN 16 GAUGE IN THICKNESS.

CYLINDER GUARDS

CYLINDER GUARDS SHALL BE INSTALLED ON ALL CYLINDER LOCKS WHENEVER THE CYLINDER PROJECTS BEYOND THE FACE OF THE DOOR OR IS OTHERWISE ACCESSIBLE TO GRIPPING TOOLS.

13. CONSTRUCTION MEANS & METHODS DURING CONSTRUCTION

THE ARCHITECT WILL NOT BE RESPONSIBLE FOR OR HAVE CONTROL OR CHARGE OF CONSTRUCTION MEANS, METHODS, TECHNIQUES, SEQUENCES OR PROCEDURES, OR FOR SAFETY PRECAUTIONS AND PROGRAMS IN CONNECTION WITH THE WORK, AND NEITHER WILL THE ARCHITECT BE RESPONSIBLE FOR THE CONTRACTOR'S FAILURE TO CARRY OUT THE WORK IN ACCORDANCE WITH THE CONTRACT DOCUMENTS.

14. BUILDING LOCATION

THE CONTRACTOR SHALL BE RESPONSIBLE FOR THE ACCURATE PLACEMENT OF THE BUILDING ON SITE.

15. JOB SITE USE AND CLEANUP

THE CONTRACTOR SHALL CONFINE HIS OPERATIONS ON THE SITE TO AREAS PERMITTED BY THE OWNER. THE WORK SHALL BE DONE IN ACCORDANCE WITH APPLICABLE LAWS, LOCAL ORDINANCES, PERMITS AND THE CONTRACT DOCUMENTS. THE JOB SITE SHALL BE MAINTAINED IN A CLEAN, ORDERLY CONDITION FREE OF DEBRIS AND LITTER, AND SHALL NOT BE UNREASONABLY ENCUMBERED WITH ANY MATERIALS OR EQUIPMENT. EACH SUBCONTRACTOR, IMMEDIATELY UPON COMPLETION OF EACH PHASE OF HIS WORK, SHALL REMOVE ALL TRASH AND DEBRIS RESULTING FROM HIS OPERATION.

16. CUTTING, REPAIRING AND PATCHING

THE CONTRACTOR SHALL DO ALL CUTTING, FITTING, OR PATCHING OF HIS WORK THAT MAY BE REQUIRED TO MAKE ITS SEVERAL PARTS FIT TOGETHER PROPERLY AND SHALL NOT ENDANGER ANY OTHER WORK BY CUTTING, EXCAVATING, OR OTHERWISE ALTERING THE TOTAL WORK OR ANY PART OF IT. ALL PATCHING, REPAIRING AND REPLACING OF MATERIALS AND SURFACES, CUT OR DAMAGED IN EXECUTION OF WORK, SHALL BE DONE WITH APPLICABLE MATERIALS SO THAT SURFACES REPLACED SHALL, UPON COMPLETION, MATCH SURROUNDING SIMILAR SURFACES.

17. BLOCKING AND BACKING

PROVIDE ALL NECESSARY BLOCKING, BACKING AND FRAMING FOR LIGHT FIXTURES, ELECTRIC UNITS, AC EQUIPMENT AND ALL OTHER ITEMS REQUIRING SUCH SUPPORT AND CONNECTION.

PROVIDE FIRE BLOCKING (PER CBC SECTION 2516(f)) AT ALL CONSEALED SPACES OF STUD WALLS, SOFFITS, DROP CEILINGS, ETC. SPACING SHALL BE AT 10-FOOT INTERVALS BOTH HORIZONTALLY AND VERTICALLY. PROVIDE FIRE BLOCKING BETWEEN STAIR STRINGERS AT THE TOP AND BOTTOM OF THE RUN AND BETWEEN STUDS ALONG AND IN LINE WITH THE RUN OF THE STAIRS.

18. FLASHING AND SHEET METAL

THE BUILDING SHALL BE FULLY WEATHERTIGHT. ALL BUILDING PENETRATIONS SHALL BE FLASHED AND SEALED. HOLES IN FINISHES OR UNFLASHED CONDITIONS WILL NOT BE ACCEPTED. ALL BUILDING PENETRATIONS SHALL BE FULLY FLASHED PER THE STANDARDS OF THE "SHEET METAL AND AIR CONDITIONING CONTRACTOR'S NATIONAL ASSOCIATION'S" (SMACNA) ARCHITECTURAL SHEET METAL MANUAL. THESE STANDARDS SHALL BE APPLIED TO ALL FLASHING: TOP OF WALL COPING, REGLETS AND COUNTER FLASHING AT TERMINATION OF ROOF, COUNTER FLASHING AT ALL ROOF EQUIPMENT, ROOF TO WALL FLASHING, ALL ROOF PENETRATIONS, SCUPPERS AND DOWN SPOUTS, DRIPS AT TOP OF DOORS AND WINDOW, ETC. WHETHER DETAILED OR NOT, ALL CONDITIONS SHALL BE PROPERLY FLASHED.

19. ENGINEERED CONSTRUCTION

ANY ENGINEERED DESIGN SUBMITTED FOR REVIEW WHICH IS PROVIDED BY OTHERS AND IS NOT INCLUDED IN THE SCOPE OF WORK BY KRAS DESIGN STUDIO SHALL BEAR THE SEAL OF AN ENGINEER REGISTERED IN THE STATE OF CALIFORNIA.

20. SPECIFIED MATERIALS

CONTRACTOR SHALL NOTIFY THE ARCHITECT OF AVAILABILITY OF SPECIFIED MATERIALS AT THE TIME OF BIDDING. SHOULD NO NOTIFICATION BE GIVEN, IT WILL BE ASSUMED THAT THE SPECIFIED MATERIALS ARE AVAILABLE. NO SUBSTITUTION OF MATERIALS WILL BE PERMITTED WITHOUT FIRST SUBMITTING A S SUBSTITUTION CERTIFICATE TO THE ARCHITECT FOR APPROVAL. SUBSTITUTIONS SHALL BE EQUAL UNLESS APPROVED BY THE ARCHITECT AND THE OWNER.

ALL NON-SPECIFIED MATERIALS SHALL BE THE BEST OF THEIR RESPECTIVE KIND, ALL LABOR INSTALLATION SHALL BE PERFORMED IN THE BEST POSSIBLE MANNER BY SKILLED WORKMEN.

21. PROTECTION OF WORK

ALL FINISH MATERIALS SHALL BE PROTECTED AT ALL TIMES AGAINST SUBSEQUENT DAMAGE, UNTIL FINAL ACCEPTANCE BY THE ARCHITECT OR OWNER.

22. PENETRATIONS

PROVIDE 3M FIRESTOP AT ALL PENETRATIONS OF RATED WALL OR FLOOR ASSEMBLIES. INSTALL FIRESTOP PER MANUFACTURER REQUIREMENTS.

23. FIRE SPRINKLERS

WHEN CALLED FOR IN THE CODE ANALYSIS, THE SPRINKLERS SHALL BE DESIGNED AND INSTALLED TO MEET THE REQUIREMENTS OF THE CAC TITLE 24, NFPA PAMPHLET 13, UBC CHAPTER 38 AND ALL LOCAL CODES PER THE LOCAL GOVERNING AGENCY.

FIRE SPRINKLER HEADS MUST BE LOCATED A MINIMUM OF 12" CLEAR HORIZONTALLY AND VERTICALLY OF ALL STRUCTURAL BRACES. SEE STRUCTURAL DRAWINGS FOR BRACE LOCATIONS AND COORDINATE APPROPRIATELY.

ALL SPRINKLER HEADS IN FINISHED CEIING AREAS SHALL BE SEMI-RECESSED. THE FOLLOWING ITEMS SHALL BE REVIEWED BY THE ARCHITECT AND APPROVED BY THE FIRE DEPARTMENT BEFORE FINAL PLACEMENT AND INSTALLATION:

FIE ALARM BELLS AND FLASHERS

MANUAL PULL STATIONS

ANNUNCIATOR PANELS

FIRE EXTINGUISHERS

WHEN SERVING MORE THAN 20 SPRINKLER HEADS, AUTOMATIC SPRINKLER SYSTEMS SHALL BE SUPERVISED BY AN APPROVED CENTRAL, PROPRIETARY OR REMOTE, STATION SERVICE, OR SHALL BE PROVIDED WITH A LOCAL ALARM WHICH WILL GIVE AN AUDIBLE SIGMAL AT A CONSTANTLY ATTENDED LOCATION.

24. PAINTING

GENERAL INTENT: PAINT ALL INTERIOR AND EXTERIOR EXPOSED SURFACES (INCLUDING EXPOSED STRUCTURE, PIPES AND DUCTS) EXCEPT WHERE SPECIFICALLY NOTED AS NOT TO BE PAINTED. OBVIOUS ITEMS SUCH AS GLASS, CARPET, HARDWARE SHALL NOT BE PAINTED. UNLESS INDICATED, PAINT ALL REQUIRED SURFACES WITH THE MANUFACTURER'S MENTIONED ABOVE, OR MATERIALS CALLING FOR A PRE-FINISHED MANUFACTUURER'S FINISH. THE CONTRACTOR SHALL PROVIDE FOR PROTECTION OF FINISHES NOT TO RECIEVE PAINT.

25. FIRE & BUILDING & SAFETY

ALL CONTAMINATION ENCOUNTERED SHALL BE HANDLED, REMIATED AND DISPOSED OF IN ACCORDANCE WITH ALL APPLICABLE FEDERAL, STATE, AND LOCAL REGULATIONS. PRIOR TO ISSUANCE OF BUILDING PERMITS, THE DEVELOPER OF INDIVIDUAL SITES SHALL SUBMIT TO THE SATISFACTION OF THE FIRE DEPARTMENT AUTHORIZATION LETTERS, LETTERS OF RELEASE, PERMITS OR OTHER DOCUMENTATION THAT VERIFIES COMPLIANCE WITH FEDERAL, STATE AND LOCAL REGULATIONS.

kras design studio

BLOCK RESIDENCE
1790 Sycamore Canyon Road
Santa Barbara, CA 93108

This document has been created by kras design studio, which retains all copyrights to the document. It may not be reproduced, distributed, displayed, modified or used by any other person for any purpose without the express written consent of the architect.

KRAS DESIGN STUDIO
116 E Yanonali Street, Unit A2
Santa Barbara, CA 93101
karl@krasdesignstudio.com

Revisions:

GENERAL NOTES

G0.03

10.10.19

SITE FROM ST HWY 192 (SYCAMORE CANYON ROAD) **03**

SITE FROM INTERSECTION OF ST HWY 144 (SYCAMORE CANYON ROAD) AND ST HWY 192 (STANWOOD & SYCAMORE CANYON ROAD) **02**

SITE FROM ST HWY 144 (SYCAMORE CANYON ROAD) **01**

kras design studio

BLOCK RESIDENCE
1790 Sycamore Canyon Road
Santa Barbara, CA 93108

KRAS DESIGN STUDIO
116 E Yanonali Street, Unit A2
Santa Barbara, CA 93101
karl@krasdesignstudio.com

This document has been created by kras design studio, which retains all copyrights to the document. It may not be reproduced, distributed, displayed, modified or used by any other person for any purpose without the express written consent of the architect.

Revisions:

STREET PHOTOGRAPHS

G0.04

10.10.19

EXISTING FOUNDATION SLAB LOOKING SOUTH **06**

EXISTING FOUNDATION SLAB LOOKING WEST **05**

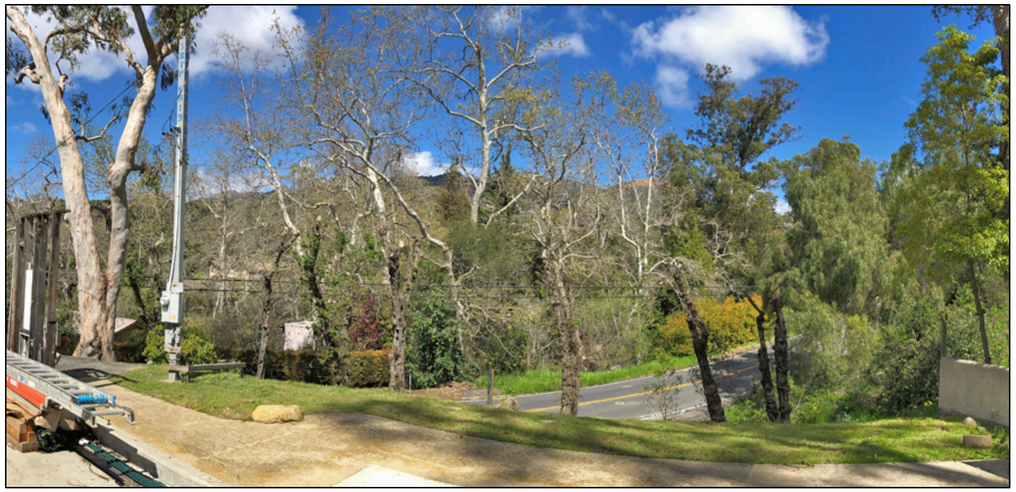

EXISTING FOUNDATION SLAB LOOKING NORTH **04**

EXISTING FOUNDATION SLAB LOOKING EAST **03**

BASE OF DRIVEWAY LOOKING AT PROPOSED MAIN RESIDENCE SITE **02**

BASE OF DRIVEWAY LOOKING AT PROPOSED GARAGE SITE **01**

kras design studio

BLOCK RESIDENCE
1790 Sycamore Canyon Road
Santa Barbara, CA 93108

KRAS DESIGN STUDIO
116 E Yanonali Street, Unit A2
Santa Barbara, CA 93101
karl@krasdesignstudio.com

This document has been created by kras design studio, which retains all copyrights to the document. It may not be reproduced, distributed, displayed, modified or used by any other person for any purpose without the express written consent of the architect.

Revisions:

SITE PHOTOGRAPHS

G0.05

10.10.19

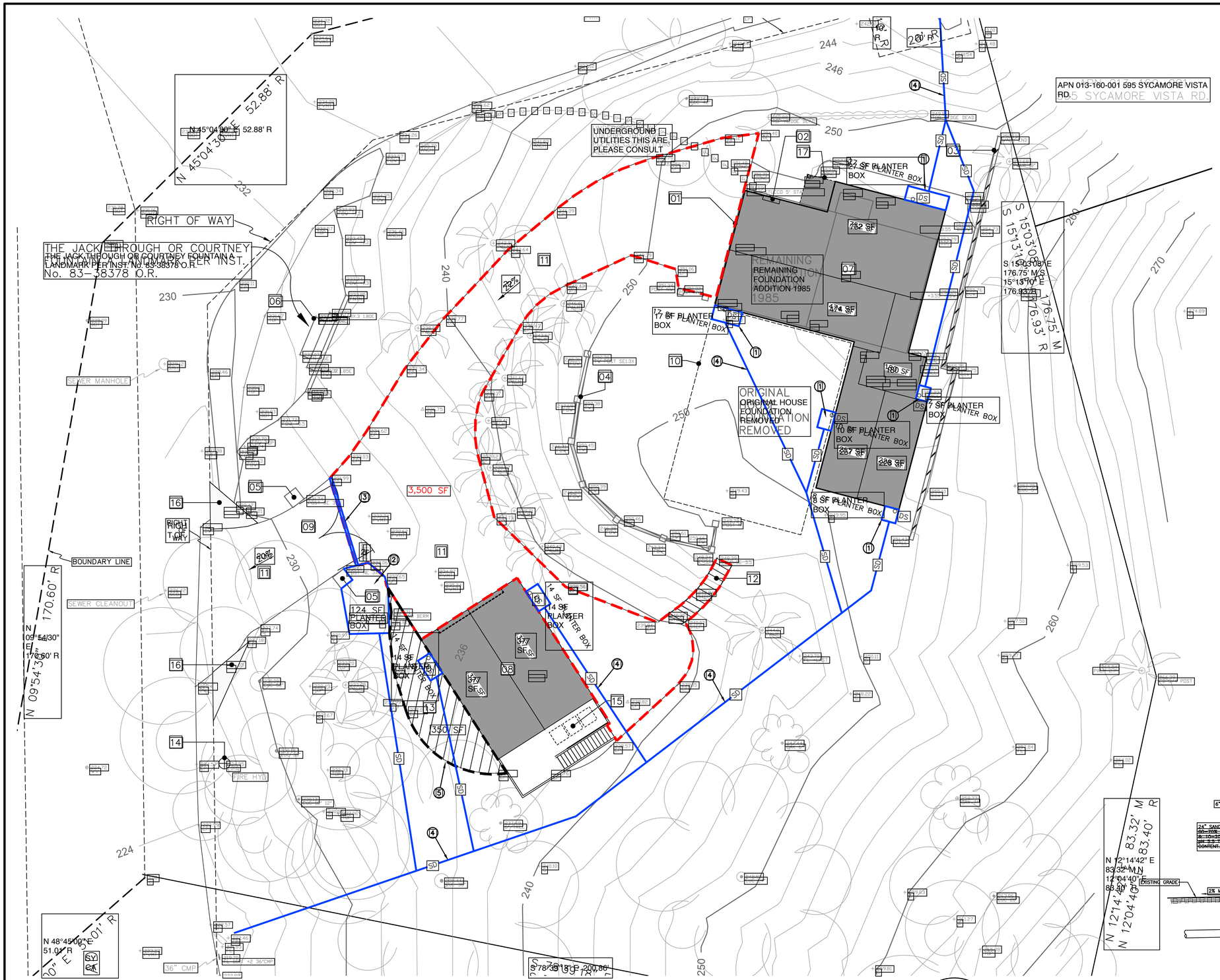

CONSTRUCTION NOTES

11. CONSTRUCT PLANTER BOX STORMWATER BMP PER DETAIL 1 ON THIS SHEET.
12. CONSTRUCT PLANTER BOX STORMWATER BMP PER DETAIL 1 ON THIS SHEET.
13. CONSTRUCT PLANTER BOX STORMWATER BMP PER DETAIL 2 ON THIS SHEET. CONNECT TO DRAIN W/ TRAFFIC GRATE.
14. CONSTRUCT 4" HDPE STORM DRAIN PIPE AT 1% SLOPE MINIMUM. CONNECT PLANTER BOXES AND DRAIN TO EXISTING SD INLETS. REMOVE EXISTING ASPHALT PAVING. ROOF DOWNSPOUT LOCATION.
15. REMOVE EXISTING ASPHALT PAVING.
16. ROOF DOWNSPOUT LOCATION.

SITE KEYNOTES

01. EXISTING FOUNDATION SLAB
02. EXISTING ELECTRICAL MAIN
03. EXISTING 42" HI RETAINING WALL
04. EXISTING 16" SQ. 72" HI COLUMNS (TOTAL OF 12)/RETAINING WALL
05. EXISTING 30" SQ. 9'-2" HI ENTRY GATE POSTS
06. EXISTING HISTORIC CITY LANDMARK (JACK TROUGH/COURTNEY FOUNTAIN)
07. PROPOSED MAIN RESIDENCE
08. PROPOSED DETACHED GARAGE
09. PROPOSED 8'-6" x 6'-0" SOLID NATURAL CEDAR ENTRY GATES
10. OPEN YARD SPACE: MIN. 1,250 SQUARE FEET SPACE, 20'-0"x 20'-0" MIN. DIMENSION
11. EXISTING ASPHALT DRIVEWAY
12. EXISTING CONCRETE STEPS
13. REMOVE EXISTING ASPHALT
14. EXISTING FIRE HYDRANT
15. COVERED TRASH LOCATION
16. 10'x 10' VISIBILITY TRIANGLE. NO FENCE, SCREEN, WALL OR HEDGE EXCEEDING A HEIGHT OF 42" SHALL BE LOCATED WITH THE TRIANGULAR AREA ALSO REFERRED TO AS "VISIBILITY TRIANGLE") ON EITHER SIDE OF THE DRIVEWAY.
17. LINE OF PROPOSED OVERHANG

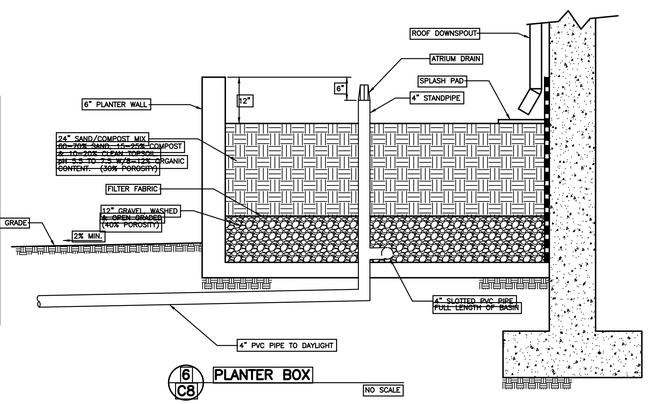

6 / C8 PLANTER BOX

NO SCALE

REFERENCES:	
DRAWING FILE:	0488FGP.DWG
DATA FILE:	
PROJECT FILE:	
VIEW NAME:	
XREF NAME(S):	
0505TIER3.DWG 9/10/19 08:50:21 AM PDT	

NO.	DATE	REVISIONS	APPD.

DIGALERT — DIAL TOLL FREE 1-800-227-2600 AT LEAST TWO DAYS BEFORE YOU DIG! — UNDERGROUND SERVICE ALERT OF SOUTHERN CALIFORNIA

ATTENTION: ALL UNDERGROUND UTILITIES AND SUB-STRUCTURES SHOWN HEREON ARE OF APPROXIMATE LOCATION AND MUST BE VERIFIED BY THE CONTRACTOR PRIOR TO CONSTRUCTION. THE CONTRACTOR SHALL BEAR ALL EXPENSES FOR DAMAGES FROM STRIKING THE WRONG UTILITY. ALL UTILITIES AND SUBSTRUCTURES MUST BE LOCATED AND PROTECTED BY CONTRACTOR. THE CONTRACTOR SHALL BEAR ALL EXPENSES FOR DAMAGES TO UTILITIES AND SUBSTRUCTURES SHOWN OR NOT SHOWN.

MAC Design Associates
CIVIL ENGINEERING • LAND PLANNING • BRIDGE DESIGN
1933 CLIFF DRIVE, SUITE 6, SANTA BARBARA, CALIF. 93109 (805) 957-4748

DESIGN	DWW	CHECKED	
DRAWN	DWW		
DALE W. WEBER		DATE:	9-10-19
PROJECT ENGINEER			
R.C.E.	53753	(EXP. 6-30-21)	

No. 53753 — EXPIRES 06-30-21 — CIVIL — STATE OF CALIFORNIA

DATE SIGNED

CITY OF SANTA BARBARA, CALIFORNIA

REVIEWED BY:

DATE

FOR

BMP DRAINAGE PLAN

1790 SYCAMORE CYN RD.

CITY OF SANTA BARBARA, CALIFORNIA

WORK ORDER W.O. 0505

SHEET C101

FILE#

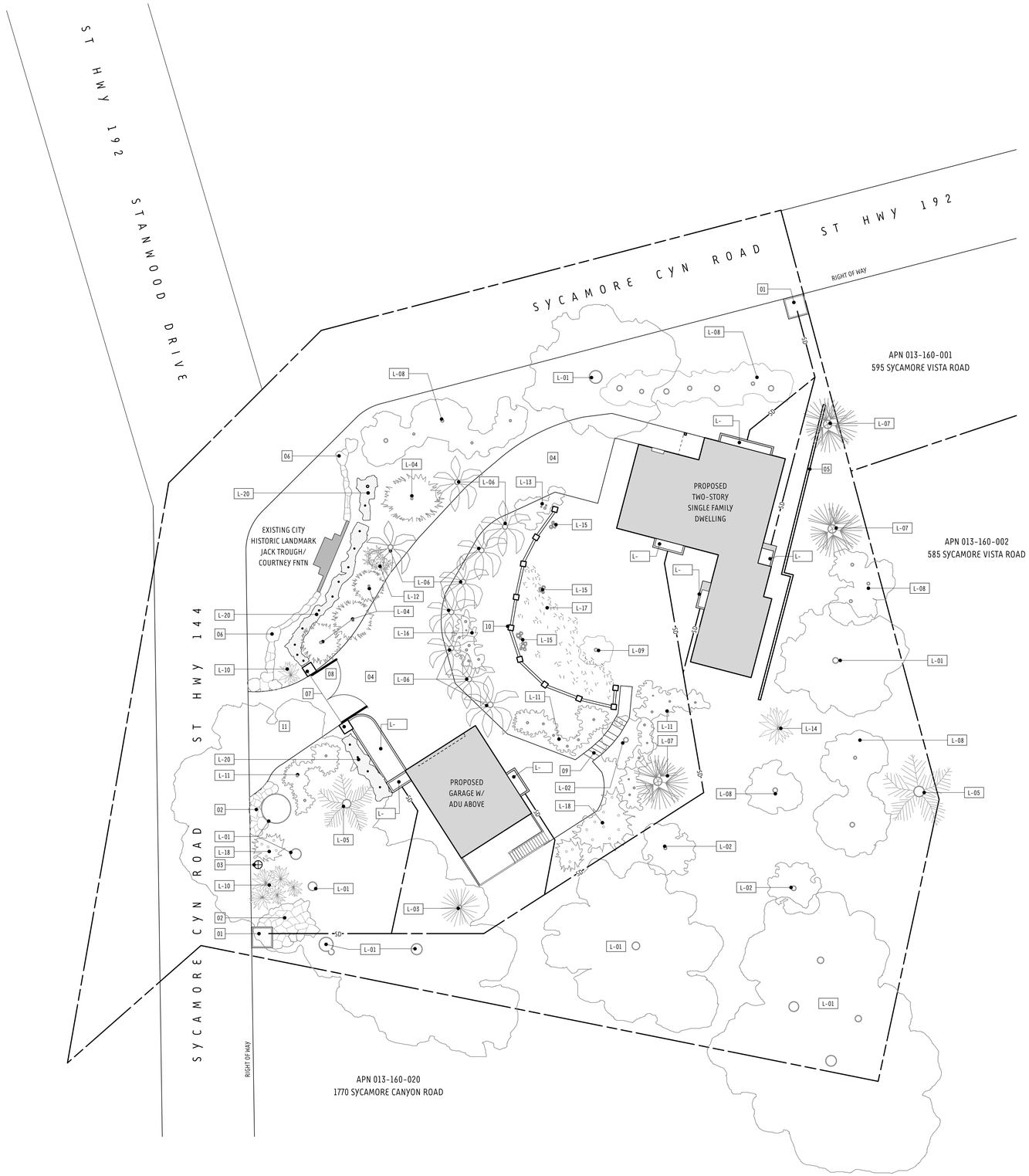

LANDSCAPE PLAN 01
SCALE: 1/16" = 1'-0"

PLAN KEYNOTES

01	EXISTING SITE DRAIN INLET
02	EXISTING RUBBLE DRAINAGE COURSE
03	EXISTING FIRE HYDRANT
04	EXISTING ASPHALT DRIVEWAY
05	EXISTING RETAINING WALL
06	EXISTING 18" HI SANDSTONE BOULDER WALL
07	EXISTING 72" HI PLASTER COLUMNS
08	PROPOSED 72" HI SWING GATE
09	EXISTING CONCRETE STAIRS
10	EXISTING PLASTER COLUMNS & RETAINING WALL
11	PROPOSED PERVIOUS PAVERS

LANDSCAPE KEYNOTES

EXISTING

L-01	*Eucalyptus globulus*	'Eucalyptus'
L-02	*Quercus agrifolia*	'Coast Live Oak'
L-03	*Sequoia sempervirens*	'California Redwood'
L-04	*Callistemon citrinus*	'Crimson Bottlebrush'
L-05	*Phoenix canariensis*	'Canary Island Date Palm'
L-06	*Syragrus romanzoffiana*	'Queen Palm'
L-07	*Washingtonia robusta*	'Mexican Fan Palm'
L-08	*Rhododendron maximum*	'Great Laurel'
L-09	*Warburgia salutaris*	'Pepper-bark Tree'
L-10	*Agave attenuata*	'Agave'
L-11	*Crassula arborescens*	'Silver Dollar'
L-12	*Aloe arborescens*	'Candelabra Aloe'
L-13	*Bougainvillea glabra*	'Kahle Bougainvillea'
L-14	*Agave americana*	'American Century Plant'
L-15	*Strelitzia nicolai*	'Giant Bird of Paradise'
L-16	*Opuntia ficus-indica*	'Tuna Cactus'
L-17	*Senecio mandraliscae*	'Blue Chalksticks'
L-18	*Echium candicans*	'Pride of Madeira'

PROPOSED

L-20	*Pittosporum tenuifolium*	'Pittosporum'
	(NOTE: TO BE MAINTANIED AT MAXIMUM HEIGHT OF 6'-0" PER HIGH FIRE)	
L-		

HIGH FIRE HAZARD AREA
DEFENSIBLE SPACE REQUIREMENTS

ALL EXISTING LANDSCAPING TO REMAIN.

ZONE: FOOTHILL - 100 FEET DEFENSIBLE SPACE REQUIRED FROM STRUCTURE

OWNER MUST ANNUALLY:

01. CUT AND REMOVE HAZARDOUS BRUSH, SHRUBS, AND FLAMMABLE VEGETATION SUCH AS DRY GRASS AND WEEDS WITHIN 100 FEET OF ANY STRUCTURE AND WITHIN 4 INCHES OF THE GROUND.
02. CLEAR VEGETATION FROM STREETS AND DRIVEWAYS BOTH HORIZONTALLY AND VERTICALLY ALONG YOUR PROPERTY. FLAMMABLE VEGETATION MUST BE CLEARED ON EACH SIDE OF THE STREET OR DRIVEWAY FOR A DISTANCE OF 10 FEET AND A VERTICAL DISTANCE OF 13 FEET, 6 INCHES. VEGETATION MUST BE CUT TO WITHIN 4 INCHES OF THE GROUND. THIS APPLIES TO YOUR PUBLIC OR PRIVATE DRIVEWAY AND ANY PUBLIC OR PRIVATE STREETS THAT BORDER YOUR PROPERTY.
03. REMOVE DEAD WOOD, TRIM THE LOWER BRANCES, AND LIMB ALL LIVE TREES TO 6 FEET ABOVE THE GROUND (OR AS MUCH AS POSSIBLE WITH YOUNGER, SMALLER TREES), ESPECIALLY TREES ADJACENT TO BUILDINGS.
04. REMOVE ALL DEAD TREES FROM YOUR PROPERTY.
05. MAINTAIN THE ROOF OF ALL STRUCTURE FREE OF LEAVES, NEEDLES OR OTHER VEGETATIVE DEBRIS.
06. LEGALLY DISPOSE OF ALL CUT VEGETATION, INCLUDING ANY DEBRIS LEFT FROM PREVIOUS TREE TRIMMING AND BRUSH REMOVAL. CUT VEGETATION MAY BE CHIPPED AND SPREAD THROUGHOUT PROPERTY AS A GROUND COVER, UP TO 12 INCHES IN DEPTH, AND AT LEAST 30 FEET FROM ANY STRUCTURE.

EXCEPTIONS:

SCHRUBS, HEDGES, AND BRUSHES MAY BE RETAINED THROUGHOUT THE 100 FEET, PROVIDED:

07. THEY ARE SPACED AT LEAST 18 FEET FROM OTHER SCHRUBS OR STRUCTURES.
08. THEY ARE MAINTAINED FREE OF DEAD WOOD AND LITTER AND TRIMMED AT LEAST 2 FEET UP FROM THE GROUND, OR 1/3 OF THEIR HEIGHT, WHICHEVER IS LESS.
09. THEY DO NOT FORM A MEANS OF RAPIDLY TRANSMITTING FIRE TO A STRUCTURE.
10. OAK TREES AND OTHER NATIVE SPECIMEN TREES MAY BE RETAINED THROUGHOUT THE 100 FEET PROVIDED:
    - ALL DEAD WOOD IS REMOVED AND LOWER BRANCES ARE TRIMMED AND LIMBED TO SIX FEET ABOVE THE GROUND.
    - THEY DO NOT FORM A MEANS OF RAPIDLY TRANSMITTING FIRE TO A STRUCTURE.

kras design studio

BLOCK RESIDENCE
1790 Sycamore Canyon Road
Santa Barbara, CA 93108

KRAS DESIGN STUDIO
116 E Yanonali Street, Unit A2
Santa Barbara, CA 93101
karl@krasdesignstudio.com

This document has been created by kras design studio, which retains all copyrights to the document. It may not be reproduced, distributed, displayed, modified or used by any other person for any purpose without the express written consent of the architect.

Revisions:

LANDSCAPE PLAN

L1.01

10.10.19

SITE KEYNOTES

01 EXISTING FOUNDATION SLAB
02 EXISTING ELECTRICAL MAIN - 200 AMP SERVICE
03 EXISTING 42" HI RETAINING WALL
04 EXISTING 16" SQ. 72" HI COLUMNS (TOTAL OF 12)/RETAINING WALL
05 EXISTING 30" SQ. 9'-2" HI ENTRY GATE POSTS
06 EXISTING HISTORIC CITY LANDMARK (JACK TROUGH/COURTNEY FOUNTAIN)
07 PROPOSED MAIN RESIDENCE
08 PROPOSED DETACHED GARAGE WITH ADU ABOVE
09 PROPOSED 8'-6" x 6'-0" SOLID NATURAL CEDAR ENTRY GATES
10 OPEN YARD SPACE: MIN. 1,250 SQUARE FEET SPACE, 20'-0"x 20'-0" MIN. DIMENSION
11 EXISTING ASPHALT DRIVEWAY
12 EXISTING CONCRETE STEPS
13 REMOVE EXISTING ASPHALT
14 EXISTING FIRE HYDRANT
15 COVERED TRASH LOCATION
16 10'x 10' VISIBILITY TRIANGLE. NO FENCE, SCREEN, WALL OR HEDGE EXCEEDING A HEIGHT OF 42" SHALL BE LOCATED WITH THE TRIANGULAR AREA (ALSO REFERRED TO AS "VISIBILITY TRIANGLE") ON EITHER SIDE OF THE DRIVEWAY.
17 LINE OF PROPOSED OVERHANG
18 EXISTING WATER SERVICE
19 EXISTING POWER POLE
20 NEW 60 AMP SUBPANEL
21 EXISTING GAS MAIN
22 EXISTING SEWER LINE
23 NEW BMP PLANTERS - SEE **C1.01** AND **L1.01**

SLOPE CALCULATION STUDY

NOTE: FRONT SETBACK HAS BEEN REDUCED FROM 35' TO 30' PER THE ALLOWANCE OF SBMC 30.20.030.B.1.

LANDSCAPE NOTES

01. ALL EXISTING LANDSCAPING TO REMAIN.
02. REFER TO SHEET **L1.01** FOR LANDSCAPING AND HARDSCAPING.

SITE PLAN 01
SCALE: 1/16" = 1'-0"

kras design studio

BLOCK RESIDENCE

1790 Sycamore Canyon Road
Santa Barbara, CA 93108

KRAS DESIGN STUDIO
116 E Yanonali Street, Unit A2
Santa Barbara, CA 93101
kari@krasdesignstudio.com

This document has been created by kras design studio, which retains all copyrights to the document. It may not be reproduced, distributed, displayed, modified or used by any other person for any purpose without the express written consent of the architect.

Revisions:

PROPOSED SITE PLAN

A1.01

10.10.19

JACK TROUGH/COURTNEY FOUNTAIN ELEVATION **02**
SCALE: N.T.S.

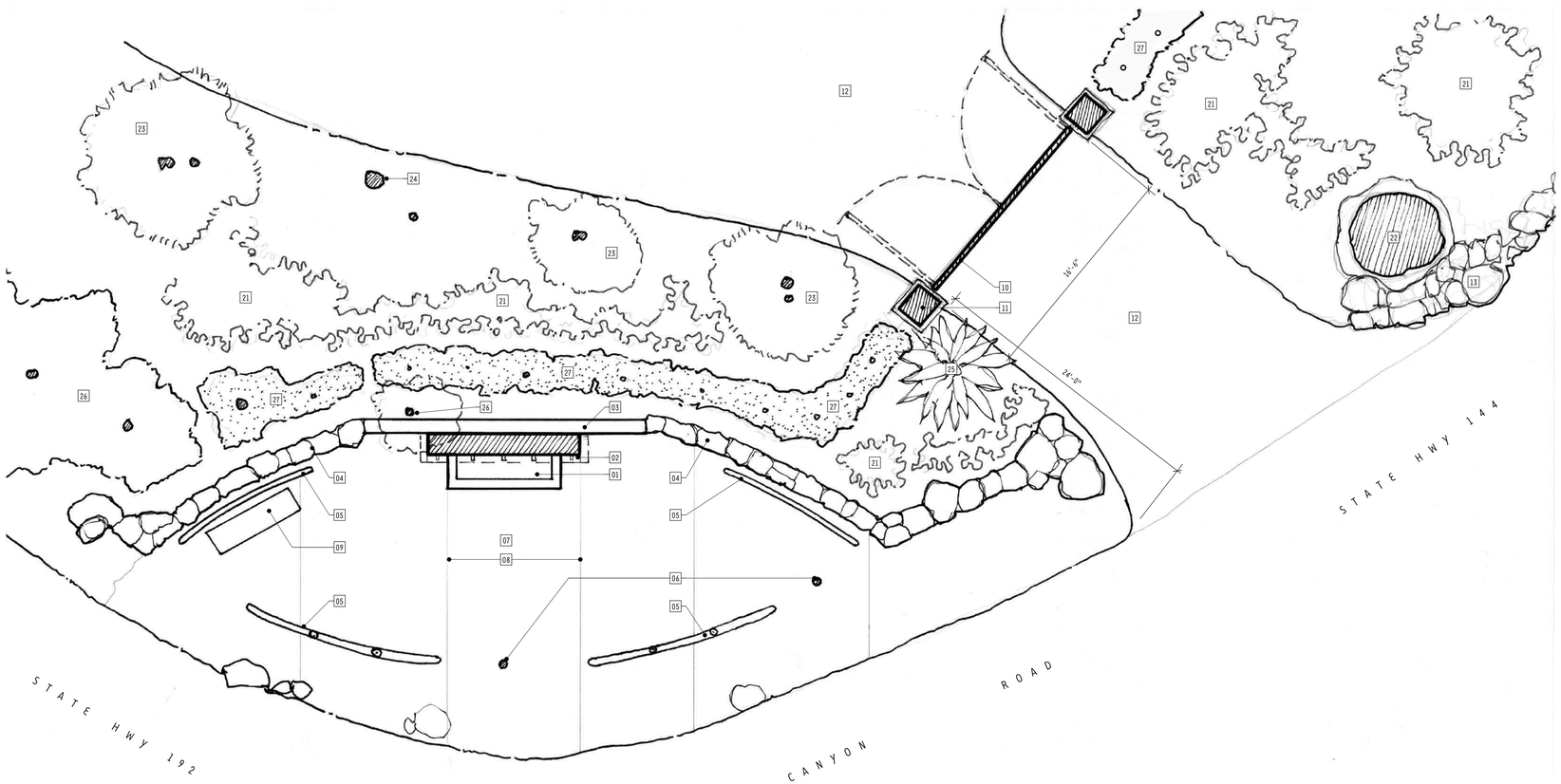

JACK TROUGH/COURTNEY FOUNTAIN PLAN **01**
SCALE: 3/16" = 1'-0"

SITE KEYNOTES

STRUCTURE AND HARDSCAPE

01 (E) LARGE ANIMAL TROUGH
02 (E) SMALL ANIMAL TROUGH
03 (E) 18" HI RETAINING WALL
04 (E) SANDSTONE RETAINING WALL, HEIGHT VARIES
05 (E) METAL PIPE RAIL
06 (E) METAL PIPE BOLLARD
07 (E) CONCRETE PAD
08 (E) CONTROL JOINTS
09 (E) METAL BENCH
10 PROPOSED 8'-6" x 6'-0" SOLID NATURAL CEDAR ENTRY GATES
11 (E) ENTRY POSTS
12 (E) ASPHALT DRIVEWAY
13 (E) SANDSTONE PAVING

PLANTINGS

21 (E) JADE
22 (E) 60" EUCALYPTUS TREE
23 (E) BOTTLEBUSH TREE
24 (E) PALM
25 (E) AGAVE
26 (E) PITISPORIUM
27 PROPOSED PITISPORIUM HEDGE TO BE MAINTAINED AT A MAXIMUM HEIGHT OF 6'-0". (PER HIGH FIRE REVIEW)

SCOPE OF PROJECT

PER CITY OF SANTA BARBARA MEMORANDUM DATED MAY 1, 2019 TO HISTORIC LANDMARKS COMMISSION FROM NICOLE HERNANDEZ, URBAN HISTORIAN.

1 BRUSH OFF LOOSE STONE FROM DETERIORATED CORNERS AND CRACKS, PREP AND REPLACE WITH STUCCO PATCH AND PAINT AS PER *NATIONAL PARK SERVICE, PRESERVATION BRIEF 42 THE MAINTANINANCE, REPAIR AND REPLACEMENT OF HISTORIC CAST STONE*

2 SEAL TROUGH WITH PROTECTOSIL SEALANT APPROPRIATE FOR CAST STONE REPAIRS

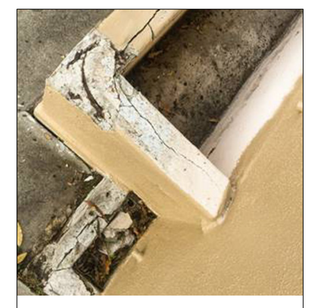

3 CRACKS WITH STUCCO PATCH AND PAINT WITH SUBTLE SHADE OF WHITE (VISTA PAINT BRAND *SWISS COFFEE*)

4 WELD RAILINGS TO ORIGINAL CONFIGURATION AND PAINT BLACK (OR HLC APPROVED COLOR FOR IRON)

5 REPAIR THE DETERIORATED ROCK WALL WITH ORIGINAL ROCK REMAINING ON THE PROPERTY TO MATCH ORIGINAL

6 LANDSCAPE BEHIND THE TROUGH/FOUNTAIN WITH *PITISPORIUM TENIFOLIM NIGARACAN*

kras design studio

BLOCK RESIDENCE
1790 Sycamore Canyon Road
Santa Barbara, CA 93108

KRAS DESIGN STUDIO
116 E Yanonali Street, Unit A2
Santa Barbara, CA 93101
karl@krasdesignstudio.com

This document has been created by kras design studio, which retains all copyrights to the document. It may not be reproduced, distributed, displayed, modified or used by any other person for any purpose without the express written consent of the architect.

Revisions:

JACK TROUGH/ COURTNEY FNTN PLAN & DTLS

A1.02
10.10.19

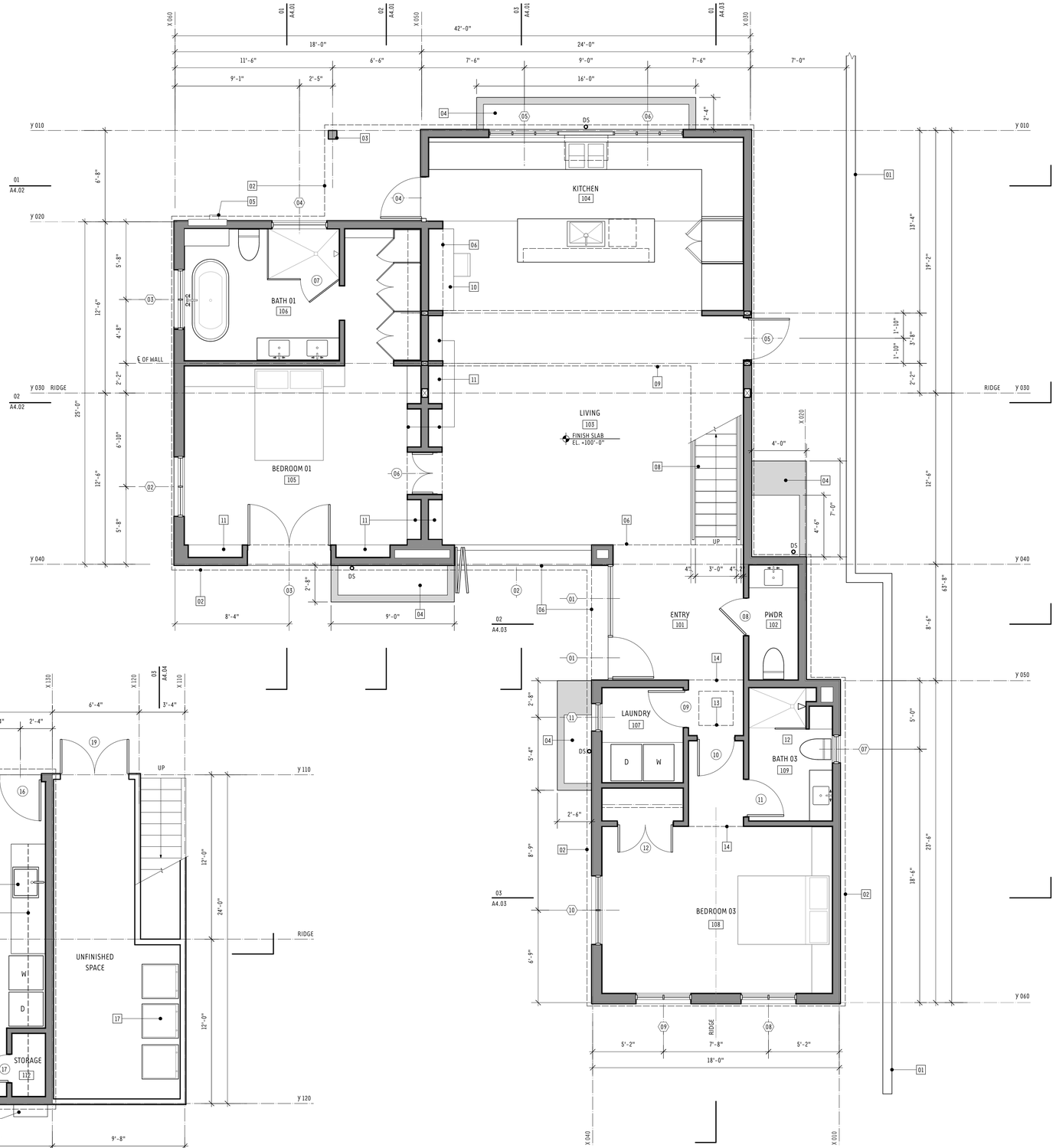

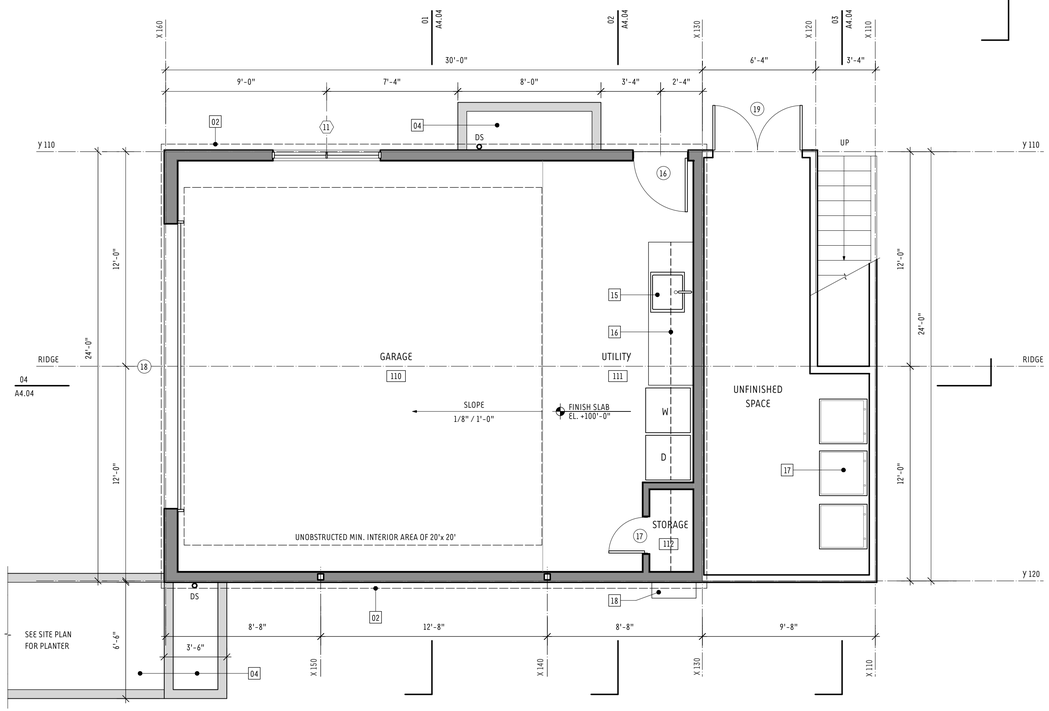

GARAGE - FIRST LEVEL PLAN 02

SCALE : 1/4"= 1'-0"

MAIN RESIDENCE - FIRST LEVEL PLAN 01

SCALE : 1/4"= 1'-0"

PLAN KEYNOTES

01 LINE OF EXISTING RETAINING WALL
02 LINE OF EAVE ABOVE
03 8 x 8 COLUMN
04 BOARD FORMED CONCRETE BMP PLANTER – SEE CIVIL DRAWINGS FOR DETAILS
05 ELECTRICAL MAIN – SEE ELECTRICAL PLANS
06 SOFFIT ABOVE
07 BENCH AND STORAGE
08 METAL STAIRS TO LOFT
09 LINE OF CATWALK ABOVE
10 DESK
11 BOOKSHELVES
12 SHELF AND POLE
13 ATTIC ACCESS DOOR
14 ARCHED CEILING ABOVE
15 UTILITY SINK IN BASE CABINET
16 UPPER CABINETS
17 TRASH LOCATION
18 TANKLESS WATER HEATER – SEE MECHANICAL DRAWINGS

LEGEND

EXISTING RETAINING WALL TO REMAIN
NEW WOOD-FRAMED WALL

kras design studio

BLOCK RESIDENCE
1790 Sycamore Canyon Road
Santa Barbara, CA 93108

KRAS DESIGN STUDIO
116 E Yanonali Street, Unit A2
Santa Barbara, CA 93101
kari@krasdesignstudio.com

This document has been created by kras design studio, which retains all copyrights to the document. It may not be reproduced, distributed, displayed, modified or used by any other person for any purpose without the express written consent of the architect.

Revisions:

FIRST LEVEL FLOOR PLAN

A2.01

10.10.19

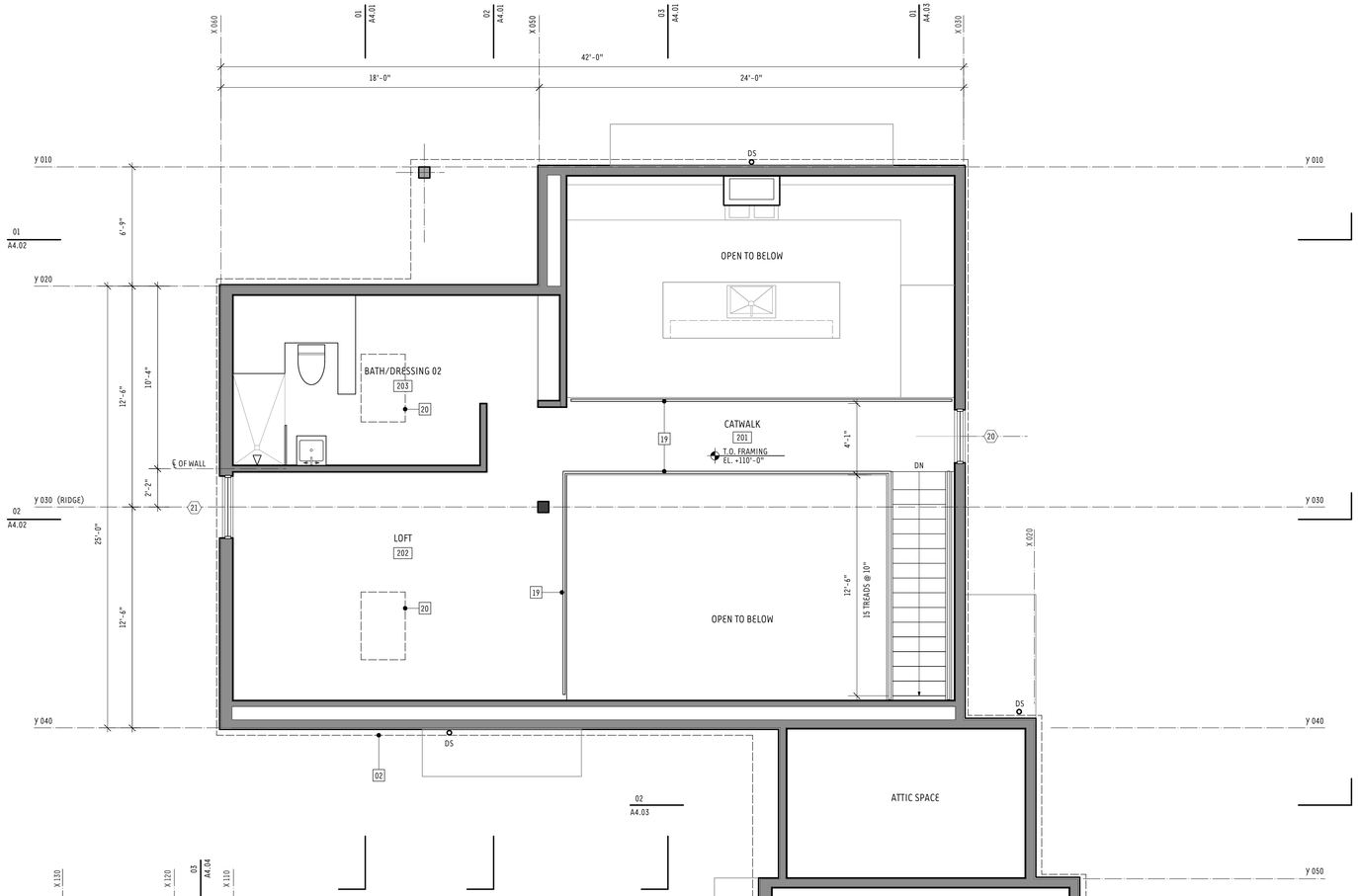

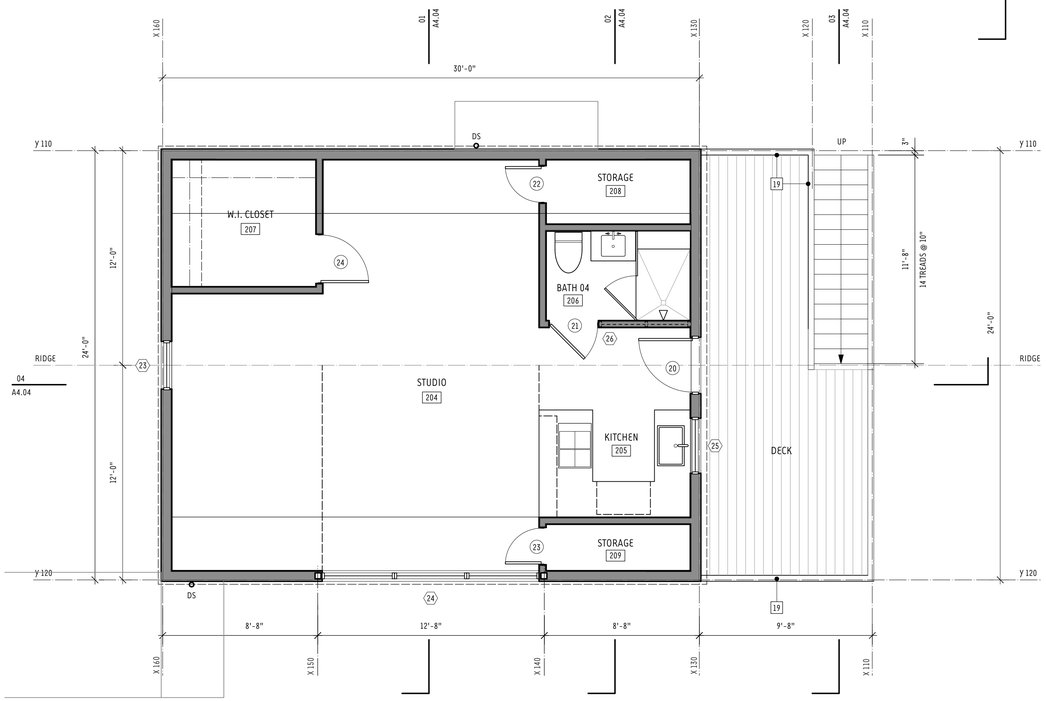

ADU - SECOND LEVEL PLAN 02

SCALE : 1/4"= 1'-0"

MAIN RESIDENCE - SECOND LEVEL PLAN 01

SCALE : 1/4"= 1'-0"

PLAN KEYNOTES

01	LINE OF EXISTING RETAINING WALL
02	LINE OF EAVE ABOVE
03	8 x 8 COLUMN
04	BOARD FORMED CONCRETE BMP PLANTER - SEE CIVIL DRAWINGS FOR DETAILS
05	ELECTRICAL MAIN - SEE ELECTRICAL PLANS
06	SOFFIT ABOVE
07	BENCH AND STORAGE
08	METAL STAIRS TO LOFT
09	LINE OF CATWALK ABOVE
10	DESK
11	BOOKSHELVES
12	SHELF AND POLE
13	ATTIC ACCESS DOOR
14	ARCHED CEILING ABOVE
15	UTILITY SINK IN BASE CABINET
16	UPPER CABINETS
17	TRASH LOCATION
18	TANKLESS WATER HEATER - SEE MECHANICAL DRAWINGS
19	42" HI GUARDRAIL
20	SKYLIGHT ABOVE

LEGEND

EXISTING RETAINING WALL TO REMAIN

NEW WOOD-FRAMED WALL

kras design studio

BLOCK RESIDENCE

1790 Sycamore Canyon Road
Santa Barbara, CA 93108

KRAS DESIGN STUDIO
116 E Yanonali Street, Unit A2
Santa Barbara, CA 93101
karl@krasdesignstudio.com

This document has been created by kras design studio, which retains all copyrights to the document. It may not be reproduced, distributed, displayed, modified or used by any other person for any purpose without the express written consent of the architect.

Revisions:

SECOND LEVEL FLOOR PLAN

A2.02

10.10.19

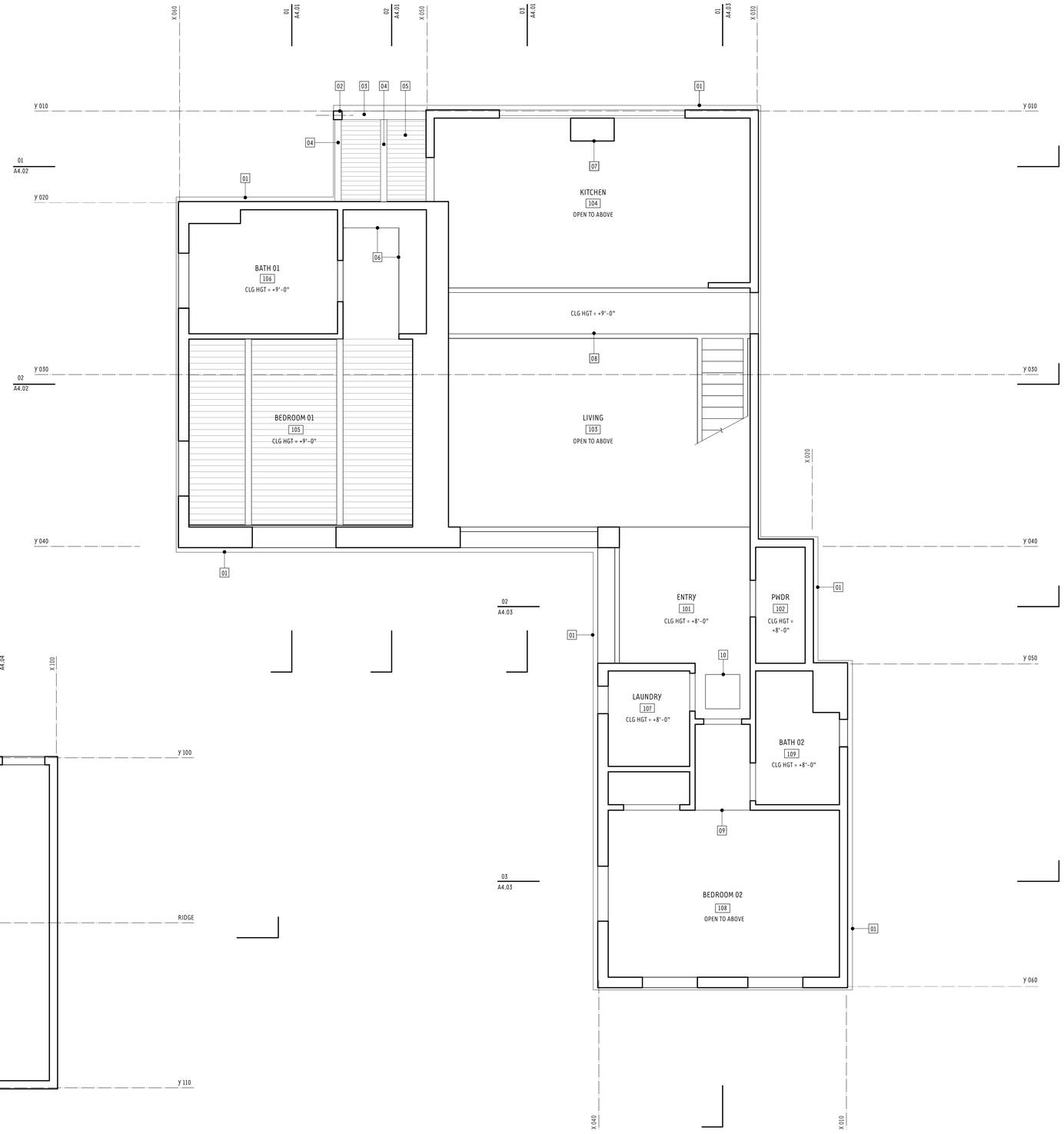

MAIN RESIDENCE - FIRST LEVEL REFLECTED CEILING PLAN 01

SCALE : 1/4" = 1'-0"

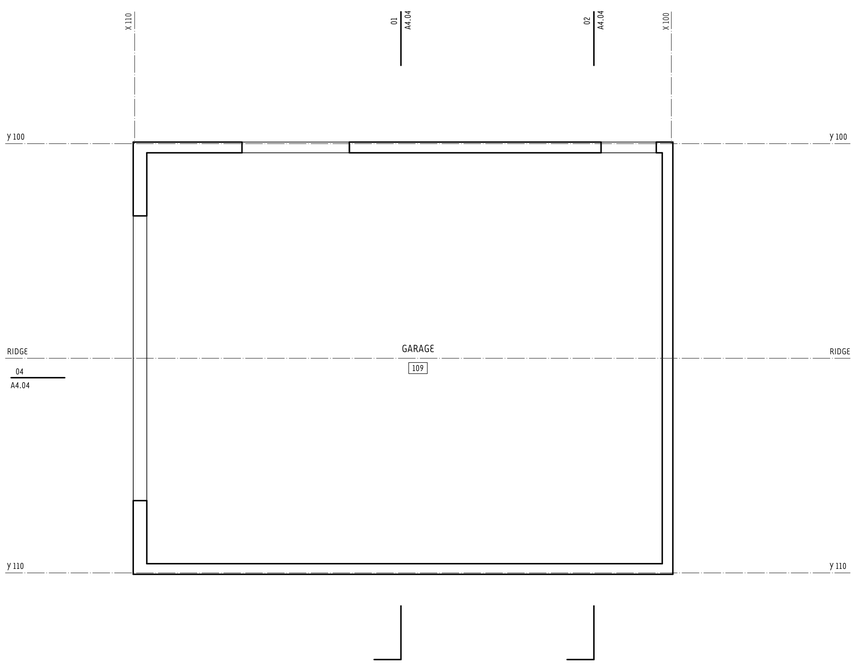

GARAGE - FIRST LEVEL REFLECTED CEILING PLAN 02

SCALE : 1/4" = 1'-0"

N

PLAN KEYNOTES

01 LINE OF EAVE/GUTTER ABOVE
02 8x8 COLUMN
03 8x BEAM
04 EXPOSED FRAMING
05 T & G WOOD CLADDING
06 LINE OF UPPER CABINETRY
07 LINE OF EXHAUST HOOD
08 LINE OF CATWALK ABOVE
09 LINE OF CEILING ABOVE
10 ATTIC ACCESS

kras design studio

BLOCK RESIDENCE

1790 Sycamore Canyon Road
Santa Barbara, CA 93108

KRAS DESIGN STUDIO
116 E Yanonali Street, Unit A2
Santa Barbara, CA 93101
karl@krasdesignstudio.com

This document has been created by kras design studio, which retains all copyrights to the document. It may not be reproduced, distributed, displayed, modified or used by any other person for any purpose without the express written consent of the architect.

Revisions:

FIRST LEVEL REFLECTED CEILING PLAN

A2.03

10.10.19

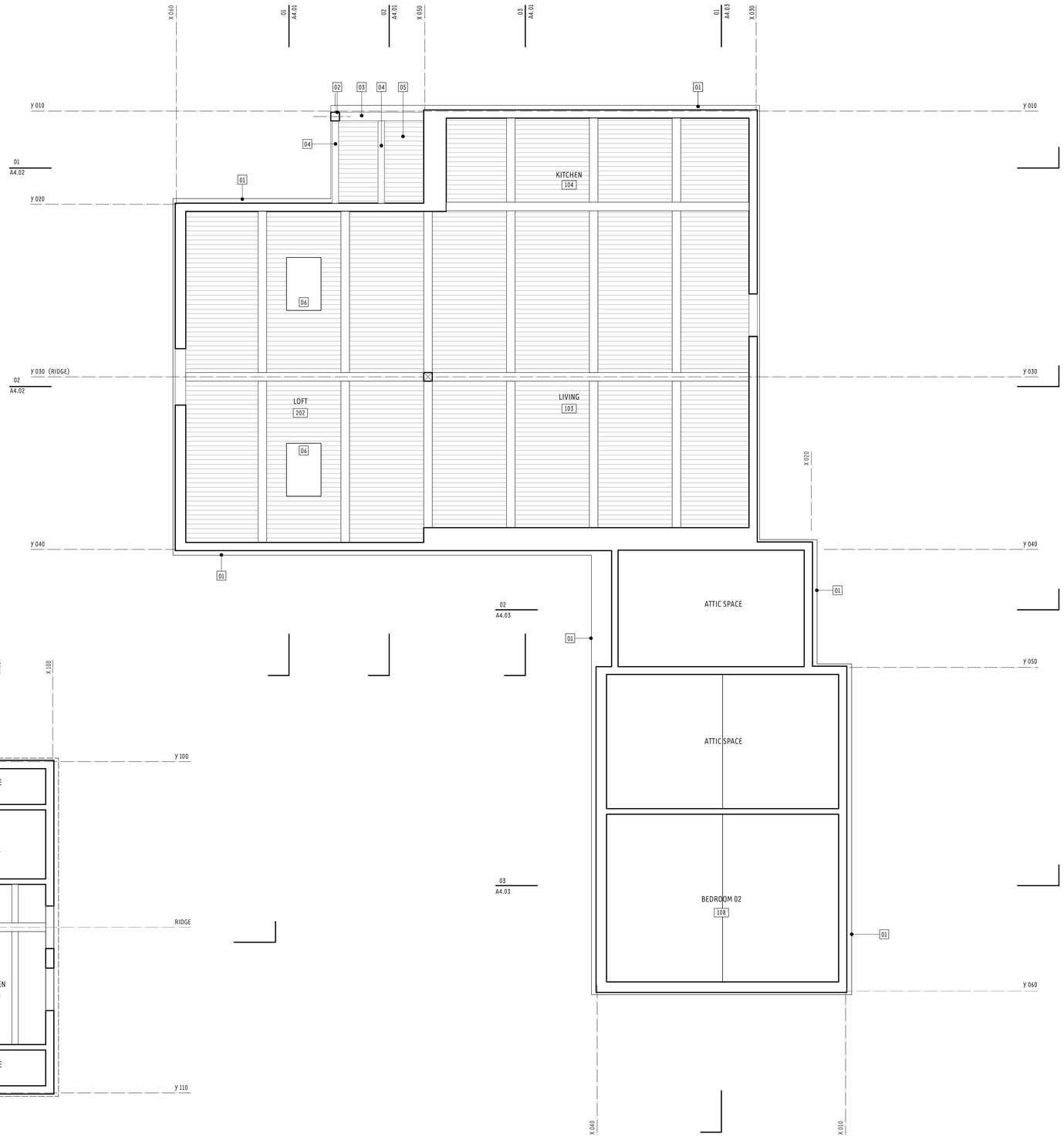

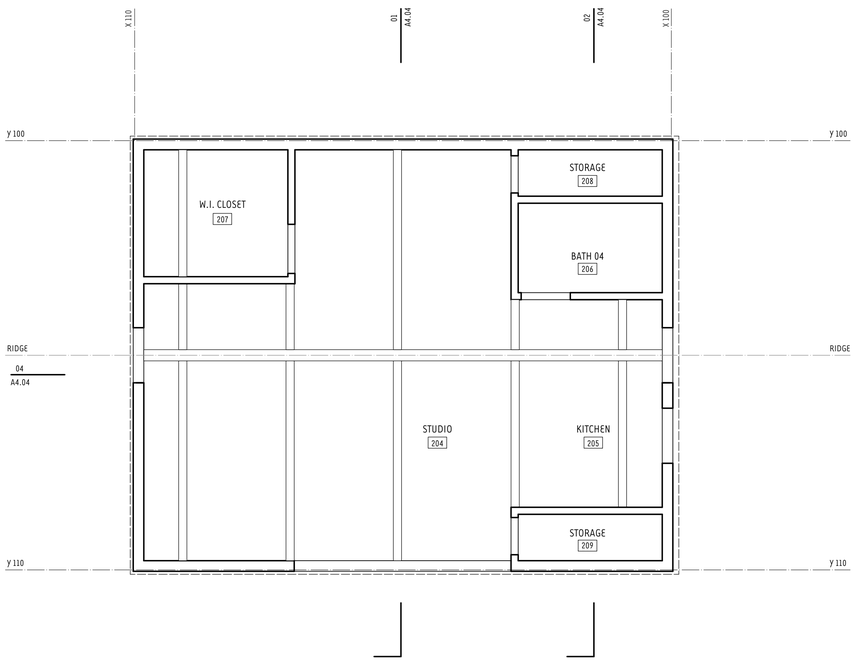

ADU- SECOND LEVEL REFLECTED CEILING PLAN 02

SCALE : 1/4"= 1'-0"

N

MAIN RESIDENCE - SECOND LEVEL REFLECTED CEILING PLAN 01

SCALE : 1/4"= 1'-0"

PLAN KEYNOTES

01 LINE OF EAVE/GUTTER ABOVE
02 8x8 COLUMN
03 8x BEAM
04 EXPOSED FRAMING
05 T & G WOOD CLADDING
06 SKYLIGHT - SEE SCHEDULE

kras design studio

BLOCK RESIDENCE

1790 Sycamore Canyon Road
Santa Barbara, CA 93108

KRAS DESIGN STUDIO
116 E Yanonali Street, Unit A2
Santa Barbara, CA 93101
karl@krasdesignstudio.com

This document has been created by kras design studio, which retains all copyrights to the document. It may not be reproduced, distributed, displayed, modified or used by any other person for any purpose without the express written consent of the architect.

Revisions:

SECOND LEVEL REFLECTED CEILING PLAN

A2.04

10.10.19

PLAN KEYNOTES

01 LINE OF FLOOR PLAN

02 GUTTER WITH GALVANIZED METAL SCREEN TO PREVENT THE ACCUMULATION OF LEAVES AND DEBRIS.

03 DOWNSPOUT TO BMP PLANTER

04 RIDGE VENT COVERED WITH NONCOMBUSTIBLE WIRE MESH. THE OPENING SIZE OF WIRE MESH IS TO HAVE A MINIMUM OPENING SIZE OF 1/16 INCH AND A MAXIMUM OPENING SIZE NOT TO EXCEED 1/8 INCH.

05 SKYLIGHT PER WINDOW SCHEDULE

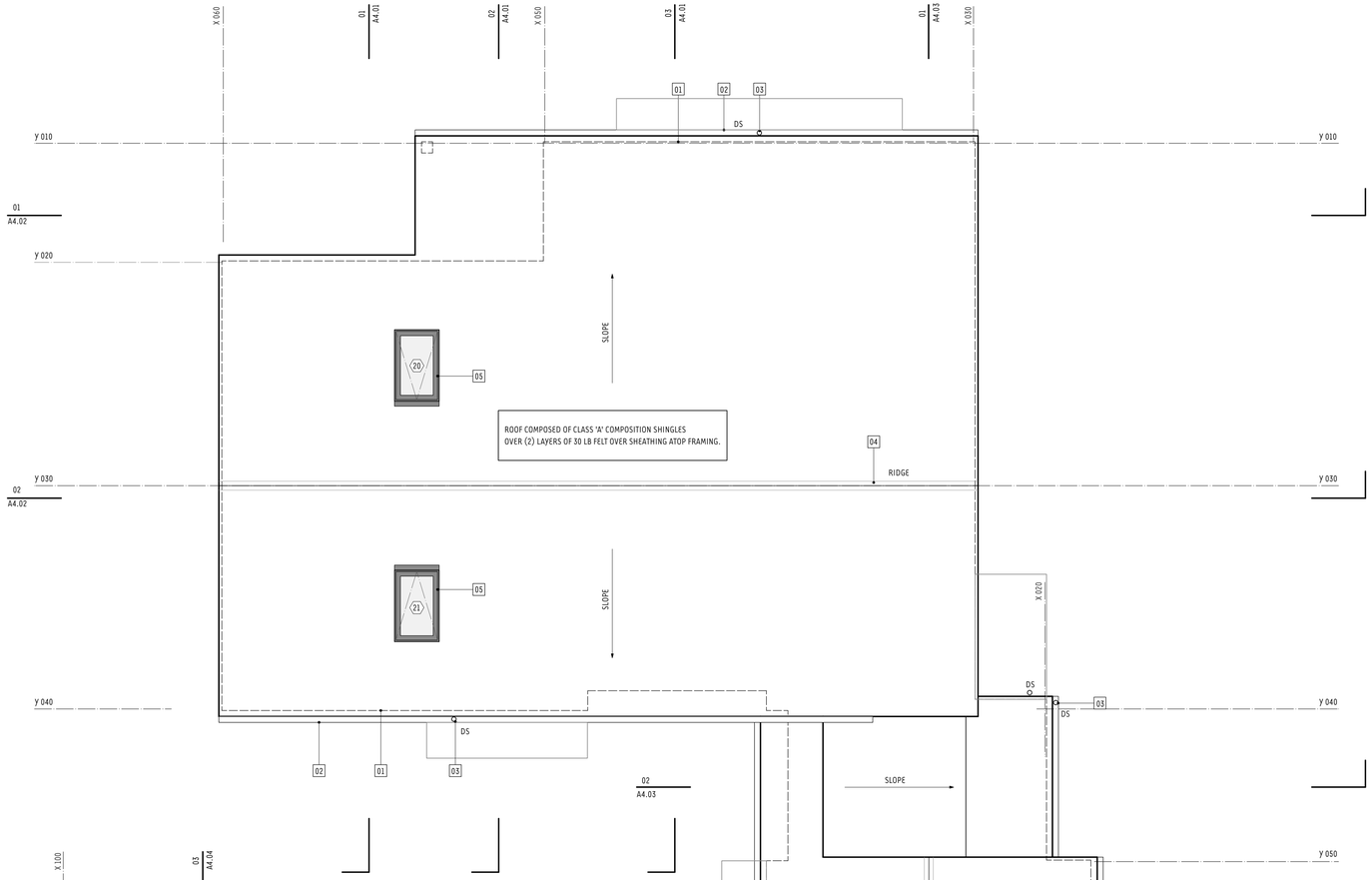

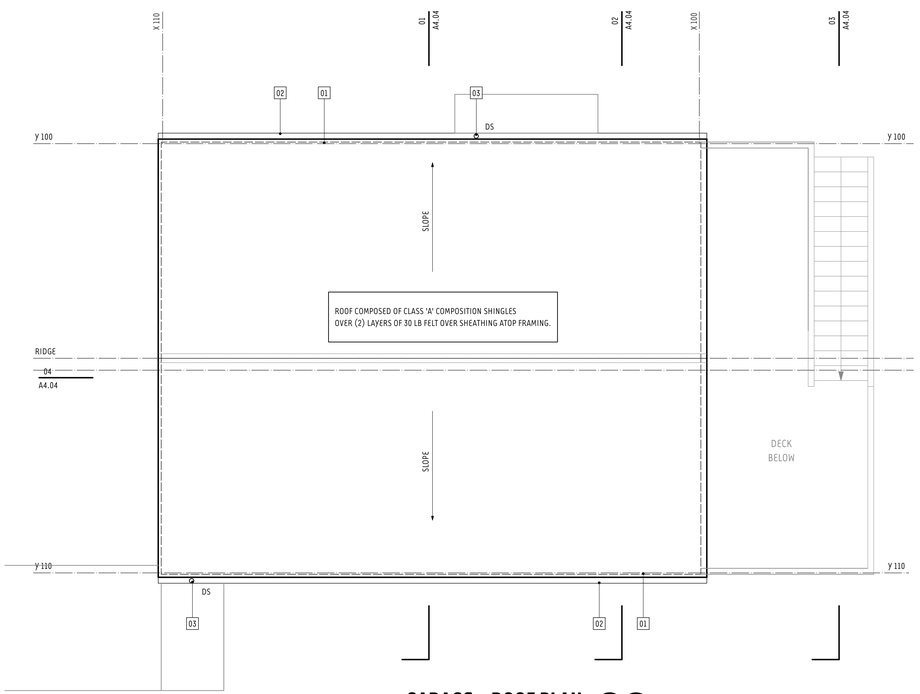

GARAGE - ROOF PLAN 02

SCALE : 1/4"= 1'-0"

N

MAIN RESIDENCE - ROOF PLAN 01

SCALE : 1/4"= 1'-0"

kras design studio

BLOCK RESIDENCE
1790 Sycamore Canyon Road
Santa Barbara, CA 93108

KRAS DESIGN STUDIO
116 E Yanonali Street, Unit A2
Santa Barbara, CA 93101
karl@krasdesignstudio.com

This document has been created by kras design studio, which retains all copyrights to the document. It may not be reproduced, distributed, displayed, modified or used by any other person for any purpose without the express written consent of the architect.

Revisions:

ROOF PLAN

A2.05

10.10.19

MR - WEST ELEVATION **02**

SCALE : 1/4" = 1'-0"

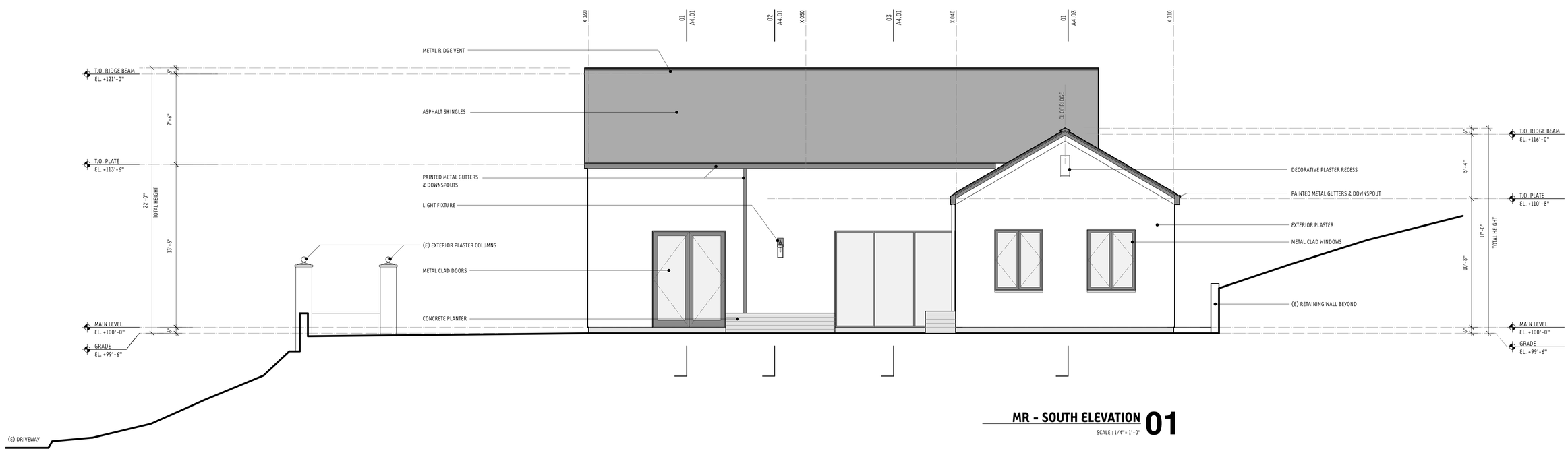

MR - SOUTH ELEVATION **01**

SCALE : 1/4" = 1'-0"

kras design studio

BLOCK RESIDENCE

1790 Sycamore Canyon Road
Santa Barbara, CA 93108

KRAS DESIGN STUDIO
116 E Yanonali Street, Unit A2
Santa Barbara, CA 93101
kar@krasdesignstudio.com

This document has been created by kras design studio, which retains all copyrights to the document. It may not be reproduced, distributed, displayed, modified or used by any other person for any purpose without the express written consent of the architect.

Revisions:

MAIN RESIDENCE
EXTERIOR
ELEVATIONS

A3.01

10.10.19

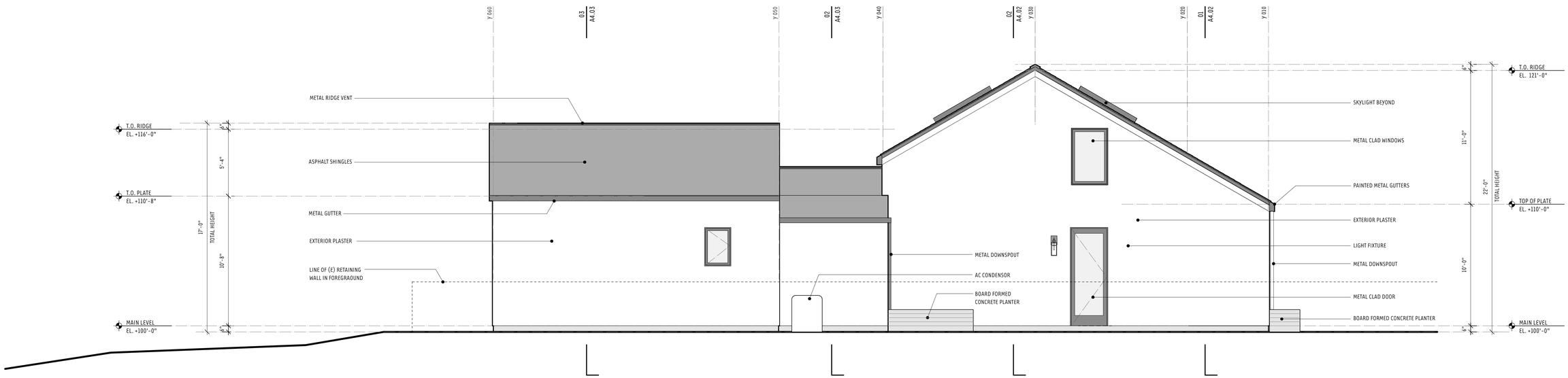

MR - EAST ELEVATION 02

SCALE : 1/4"= 1'-0"

MR - NORTH ELEVATION 01

SCALE : 1/4"= 1'-0"

kras design studio

BLOCK RESIDENCE
1790 Sycamore Canyon Road
Santa Barbara, CA 93108

KRAS DESIGN STUDIO
116 E Yanonali Street, Unit A2
Santa Barbara, CA 93101
karl@krasdesignstudio.com

This document has been created by kras design studio, which retains all copyrights to the document. It may not be reproduced, distributed, displayed, modified or used by any other person for any purpose without the express written consent of the architect.

Revisions:

MAIN RESIDENCE
EXTERIOR
ELEVATIONS

A3.02

10.10.19

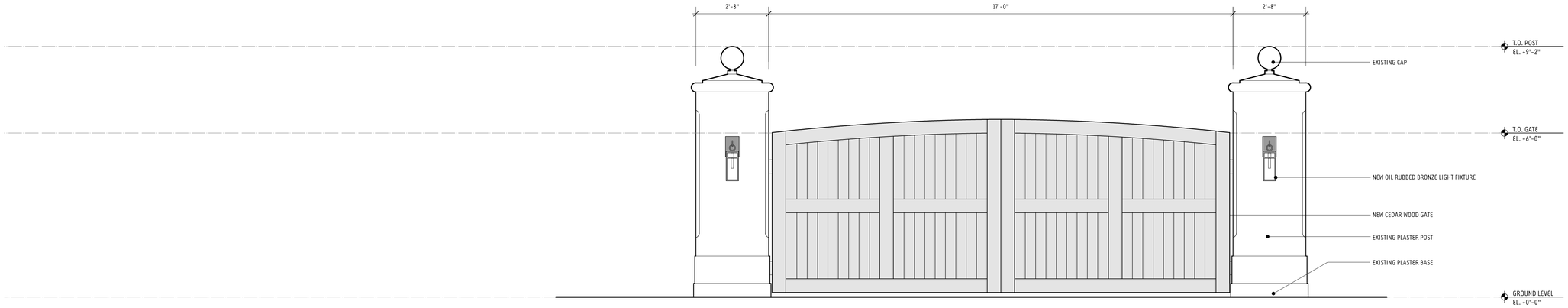

ENTRY GATE - STREET (WEST) ELEVATION 05

SCALE : 1/2"= 1'-0"

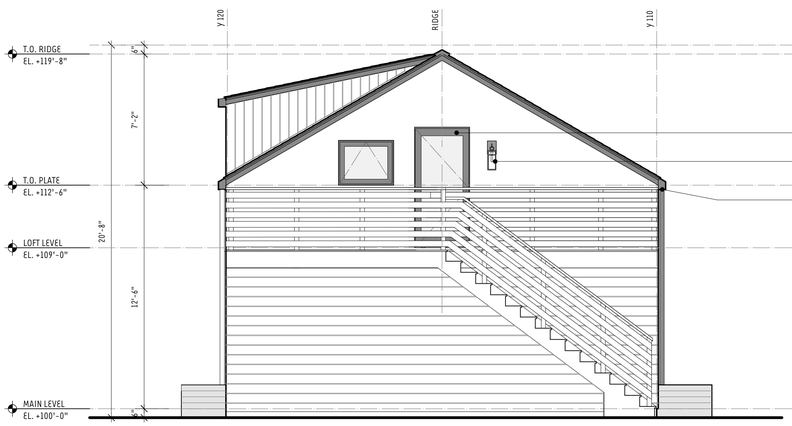

GARAGE - EAST ELEVATION 04

SCALE : 1/4"= 1'-0"

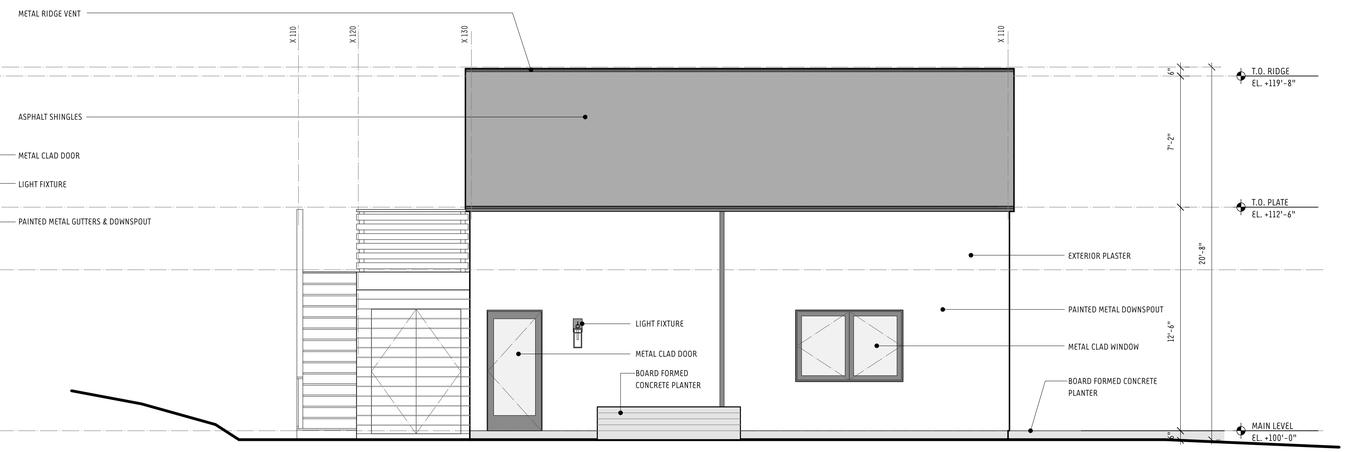

GARAGE - NORTH ELEVATION 03

SCALE : 1/4"= 1'-0"

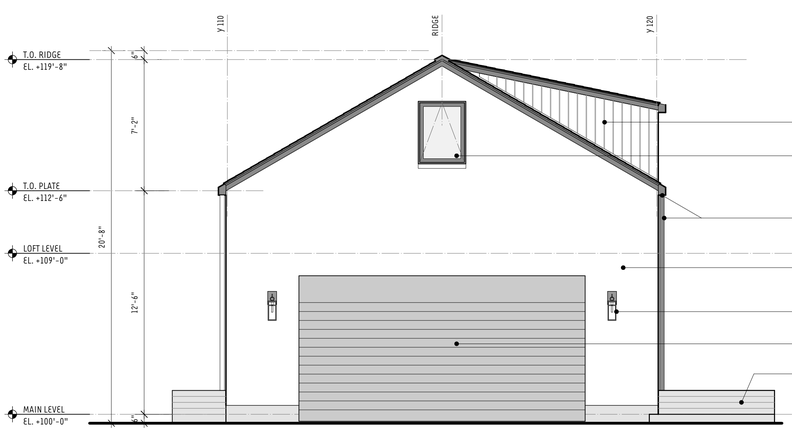

GARAGE - WEST ELEVATION 02

SCALE : 1/4"= 1'-0"

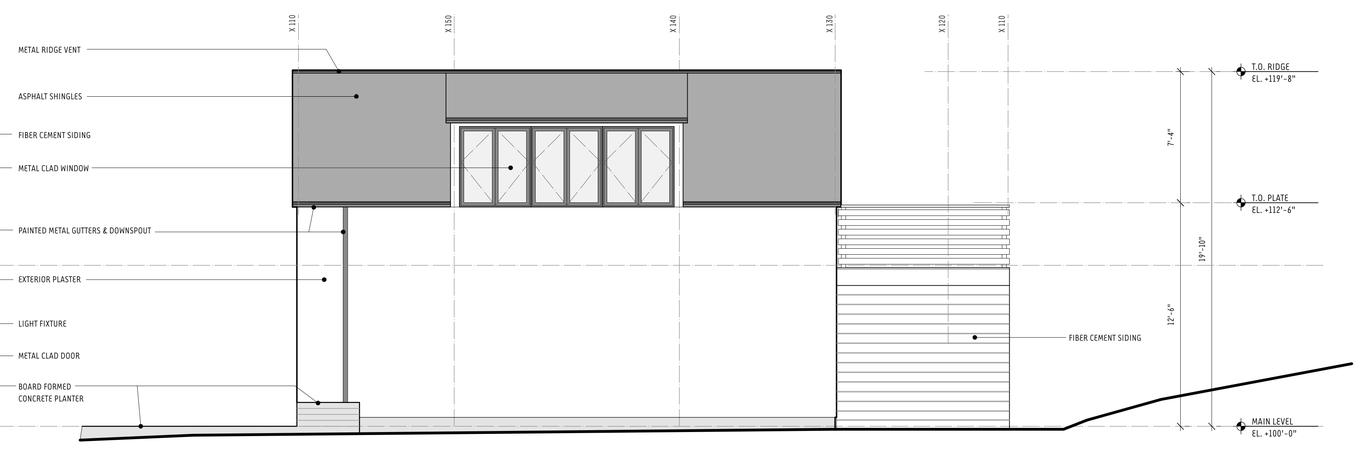

GARAGE - SOUTH ELEVATION 01

SCALE : 1/4"= 1'-0"

kras design studio

BLOCK RESIDENCE

1790 Sycamore Canyon Road
Santa Barbara, CA 93108

KRAS DESIGN STUDIO
116 E Yanonali Street, Unit A2
Santa Barbara, CA 93101
kari@krasdesignstudio.com

This document has been created by kras design studio, which retains all copyrights to the document. It may not be reproduced, distributed, displayed, modified or used by any other person for any purpose without the express written consent of the architect.

Revisions:

GARAGE/ADU
EXTERIOR
ELEVATIONS

A3.03

10.10.19

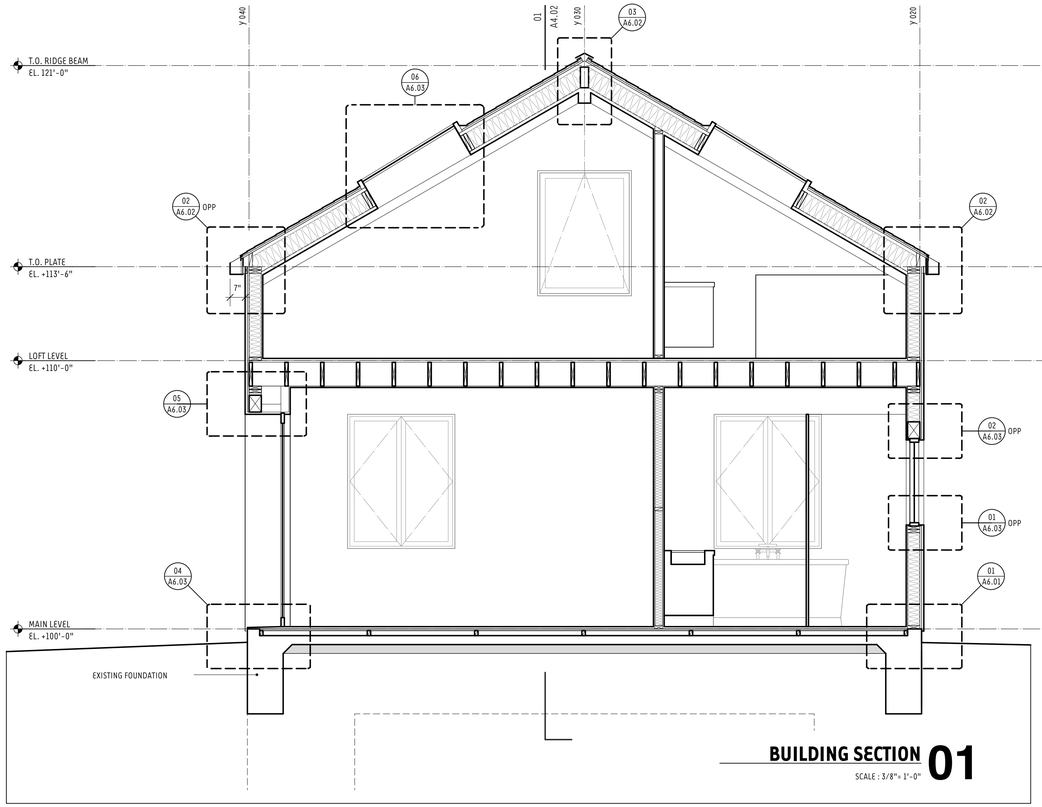

BUILDING SECTION 01

SCALE : 3/8"= 1'-0"

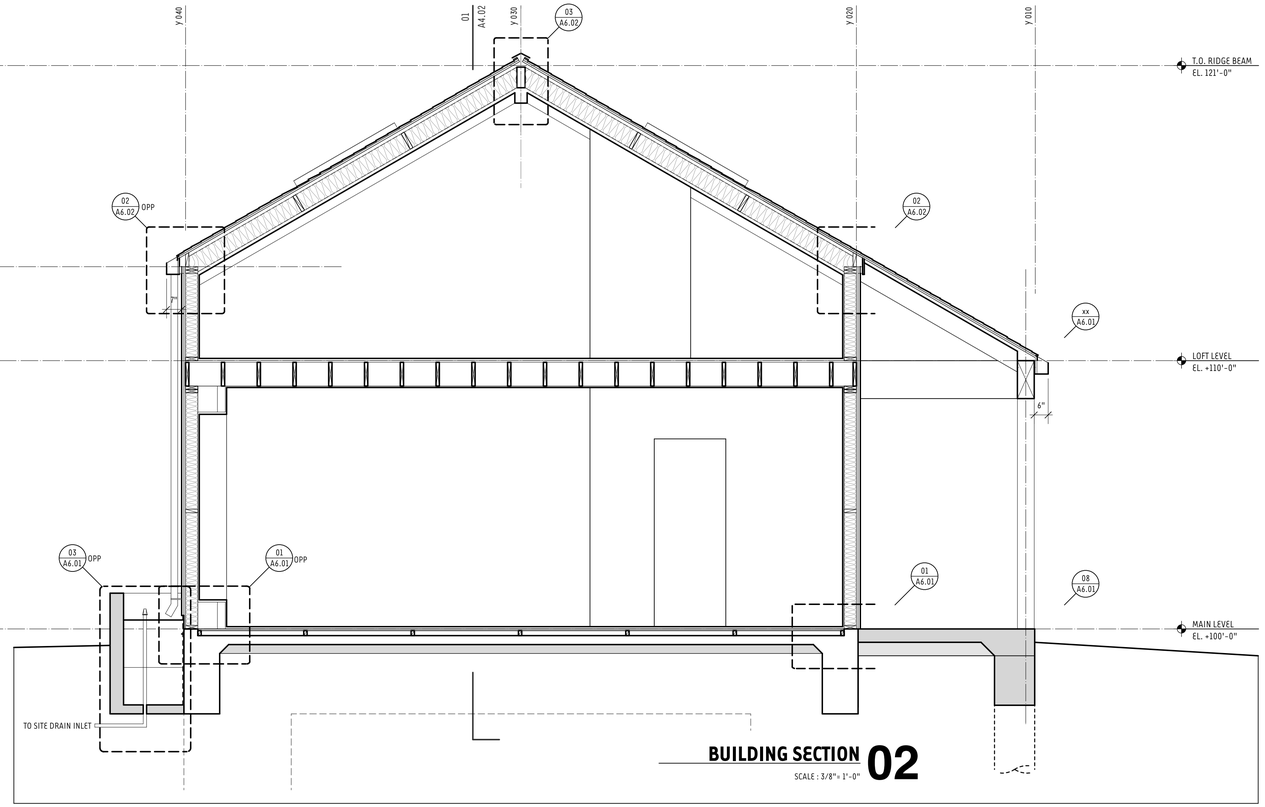

BUILDING SECTION 02

SCALE : 3/8"= 1'-0"

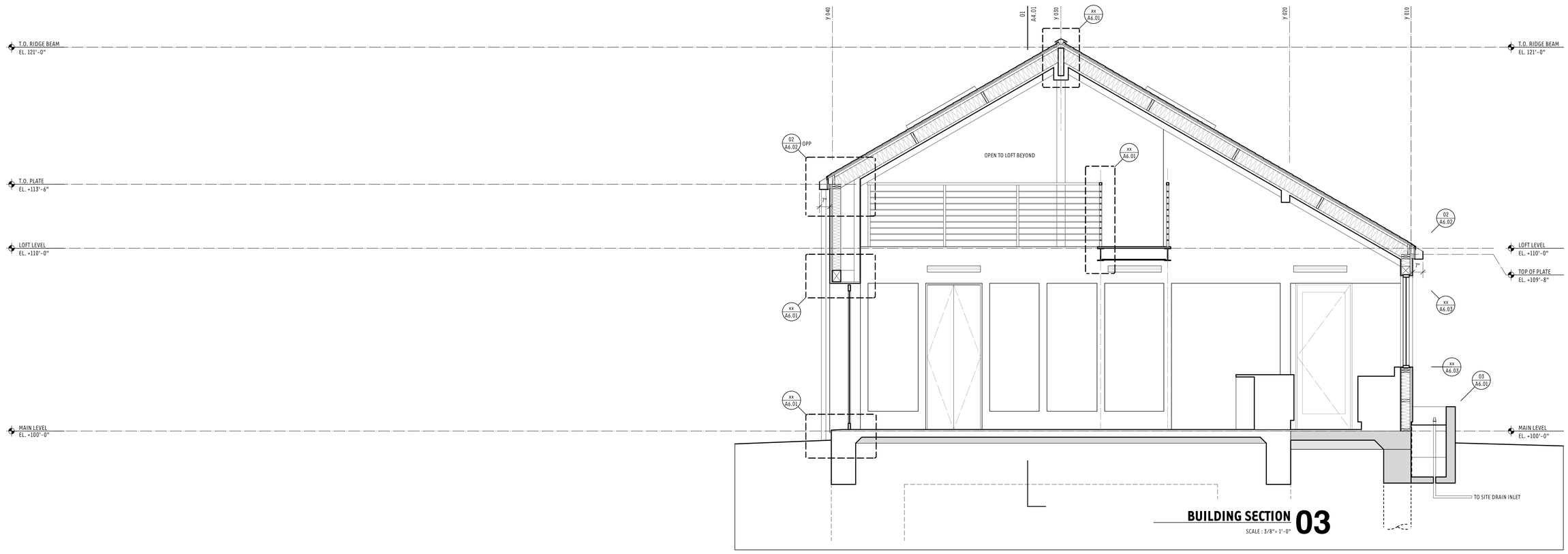

BUILDING SECTION 03

SCALE : 3/8"= 1'-0"

kras design studio

BLOCK RESIDENCE

1790 Sycamore Canyon Road
Santa Barbara, CA 93108

KRAS DESIGN STUDIO
116 E Yanonali Street, Unit A2
Santa Barbara, CA 93101
karl@krasdesignstudio.com

This document has been created by kras design studio, which retains all copyrights to the document. It may not be reproduced, distributed, displayed, modified or used by any other person for any purpose without the express written consent of the architect.

Revisions:

MAIN RESIDENCE SECTIONS

A4.01

10.10.19

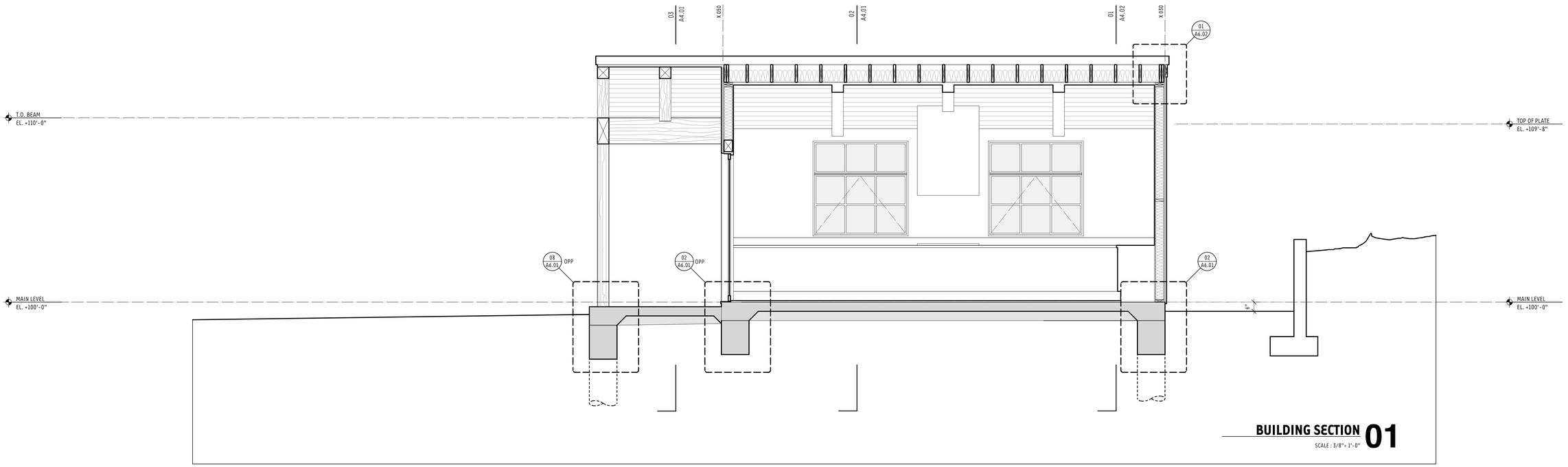

BUILDING SECTION 01
SCALE : 3/8" = 1'-0"

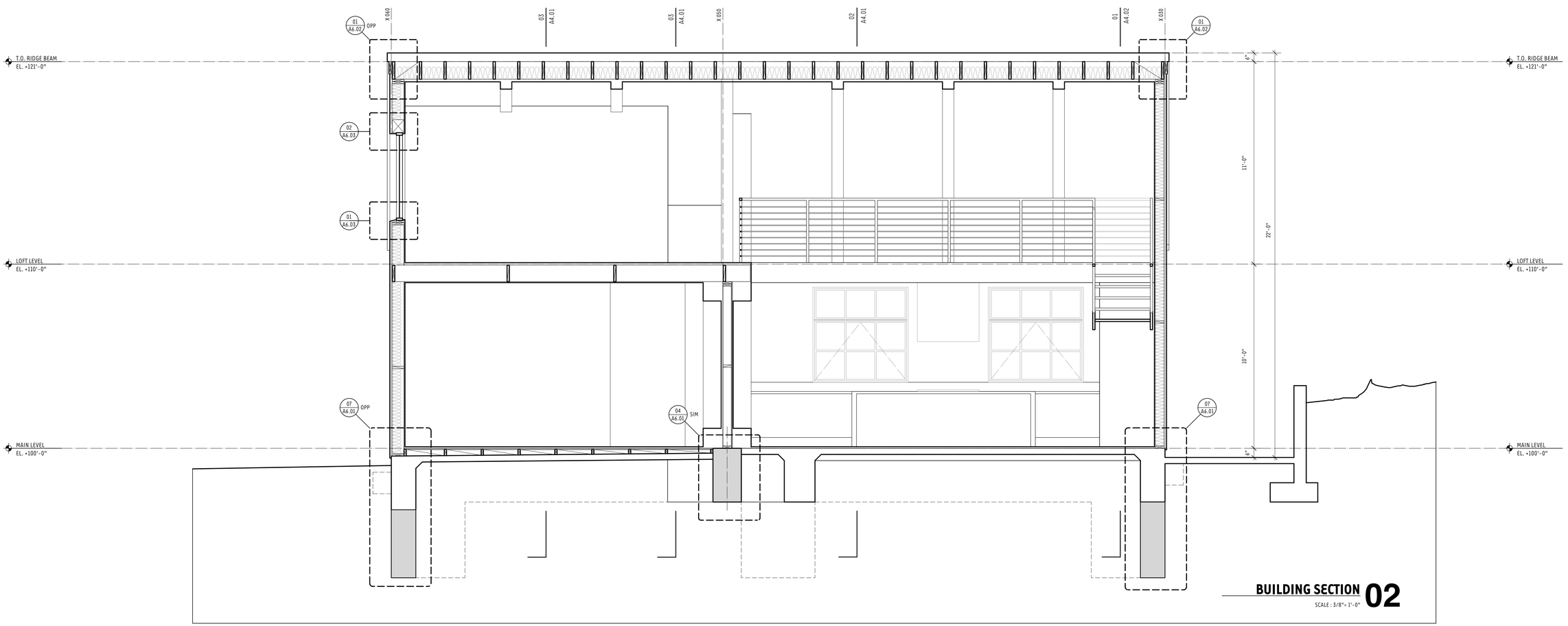

BUILDING SECTION 02
SCALE : 3/8" = 1'-0"

kras design studio

BLOCK RESIDENCE
1790 Sycamore Canyon Road
Santa Barbara, CA 93108

KRAS DESIGN STUDIO
116 E Yanonali Street, Unit A2
Santa Barbara, CA 93101
karl@krasdesignstudio.com

This document has been created by kras design studio, which retains all copyrights to the document. It may not be reproduced, distributed, displayed, modified or used by any other person for any purpose without the express written consent of the architect.

Revisions:

MAIN RESIDENCE SECTIONS

A4.02

10.10.19

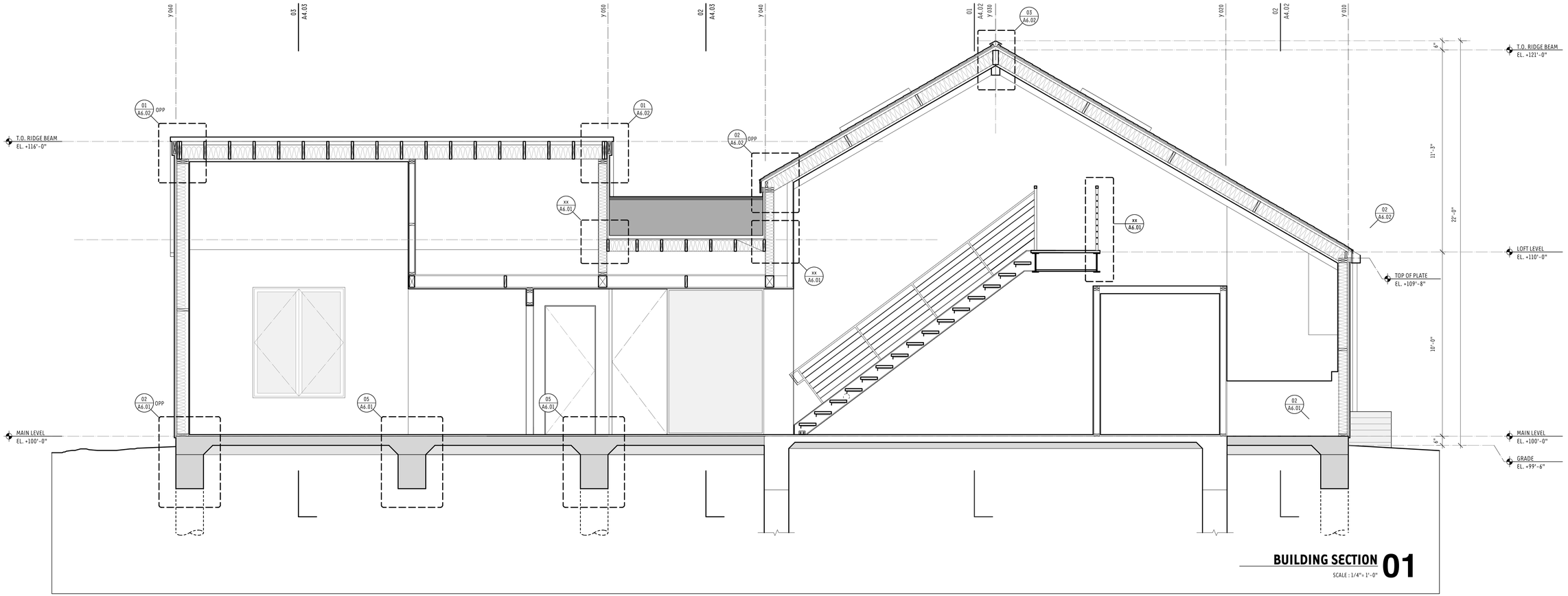

BUILDING SECTION 01
SCALE : 1/4"= 1'-0"

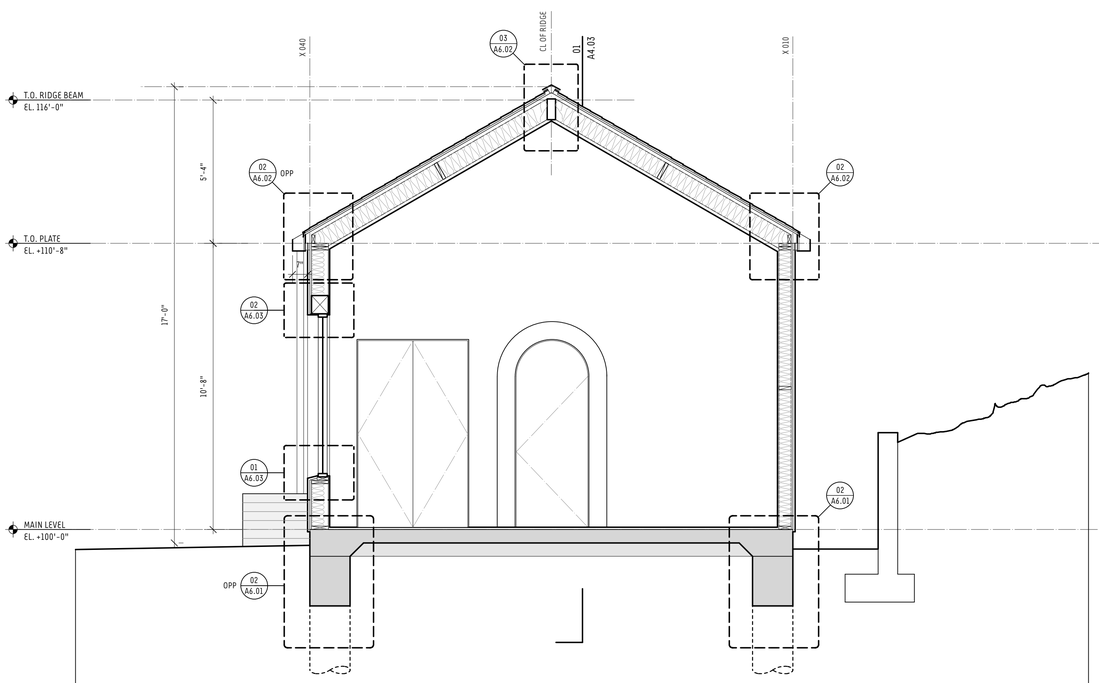

BUILDING SECTION 03
SCALE : 1/4"= 1'-0"

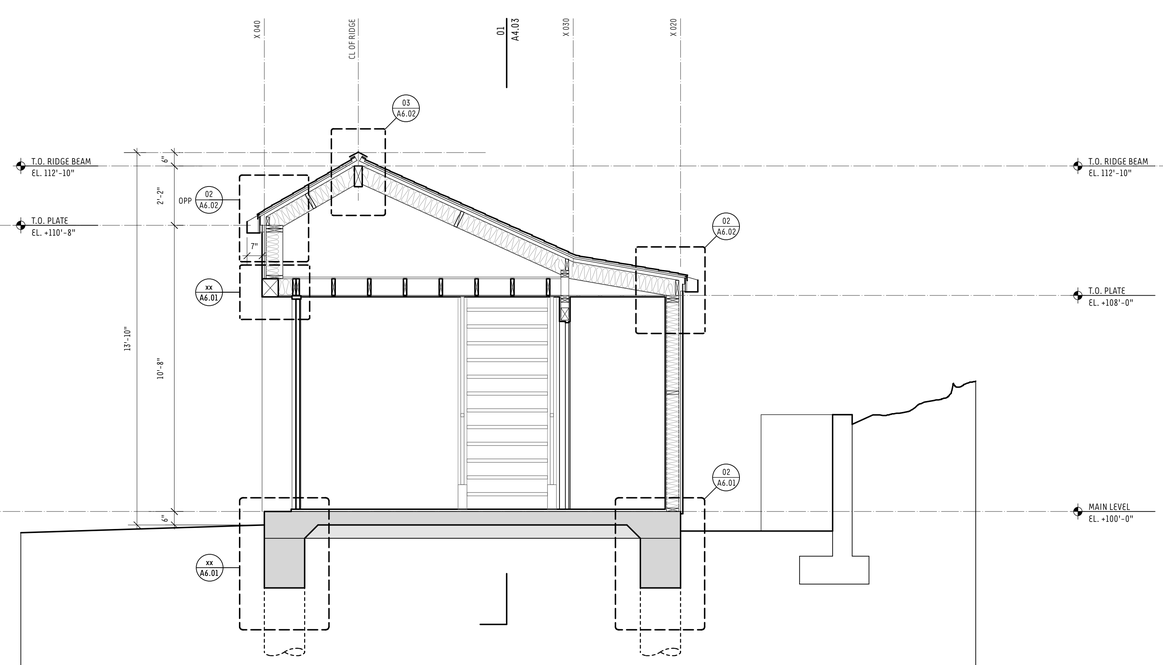

BUILDING SECTION 02
SCALE : 1/4"= 1'-0"

BLOCK RESIDENCE
1790 Sycamore Canyon Road
Santa Barbara, CA 93108

KRAS DESIGN STUDIO
116 E Yanonali Street, Unit A2
Santa Barbara, CA 93101
kari@krasdesignstudio.com

This document has been created by kras design studio, which retains all copyrights to the document. It may not be reproduced, distributed, displayed, modified or used by any other person for any purpose without the express written consent of the architect.

Revisions:

MAIN RESIDENCE SECTIONS

A4.03

10.10.19

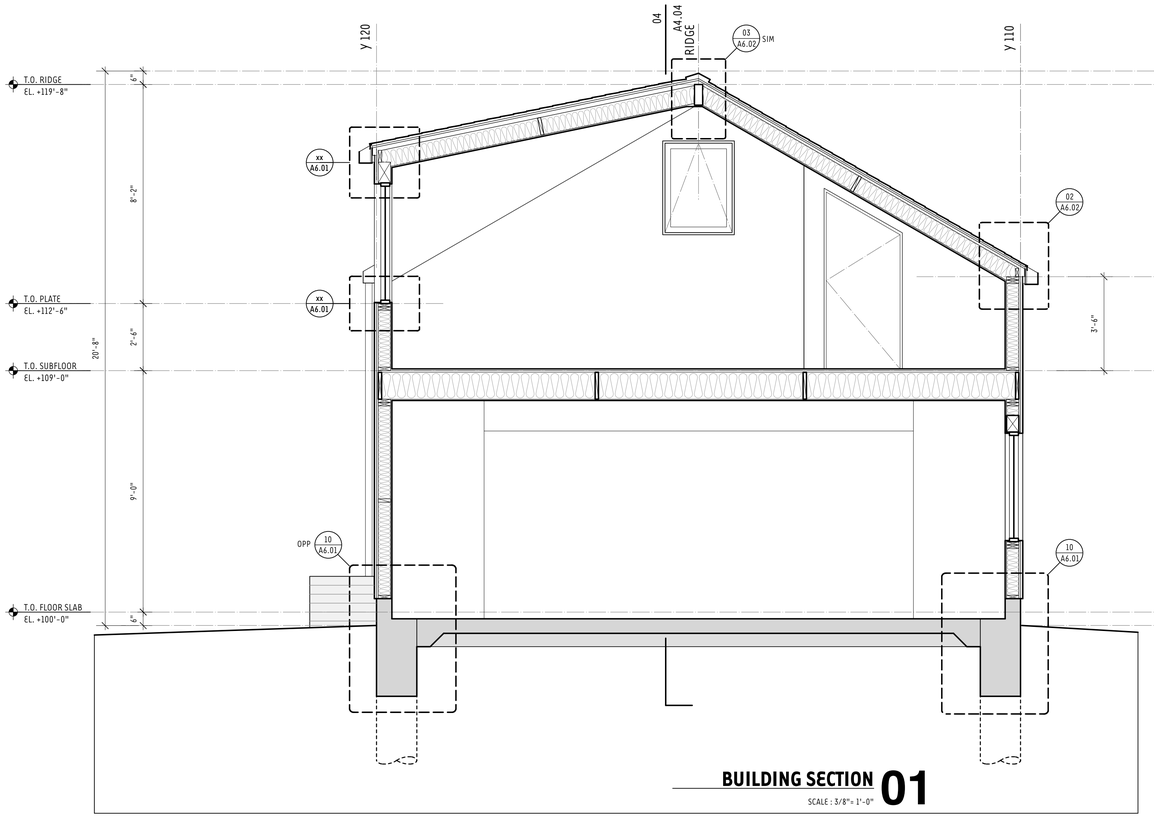

BUILDING SECTION 01

SCALE : 3/8"= 1'-0"

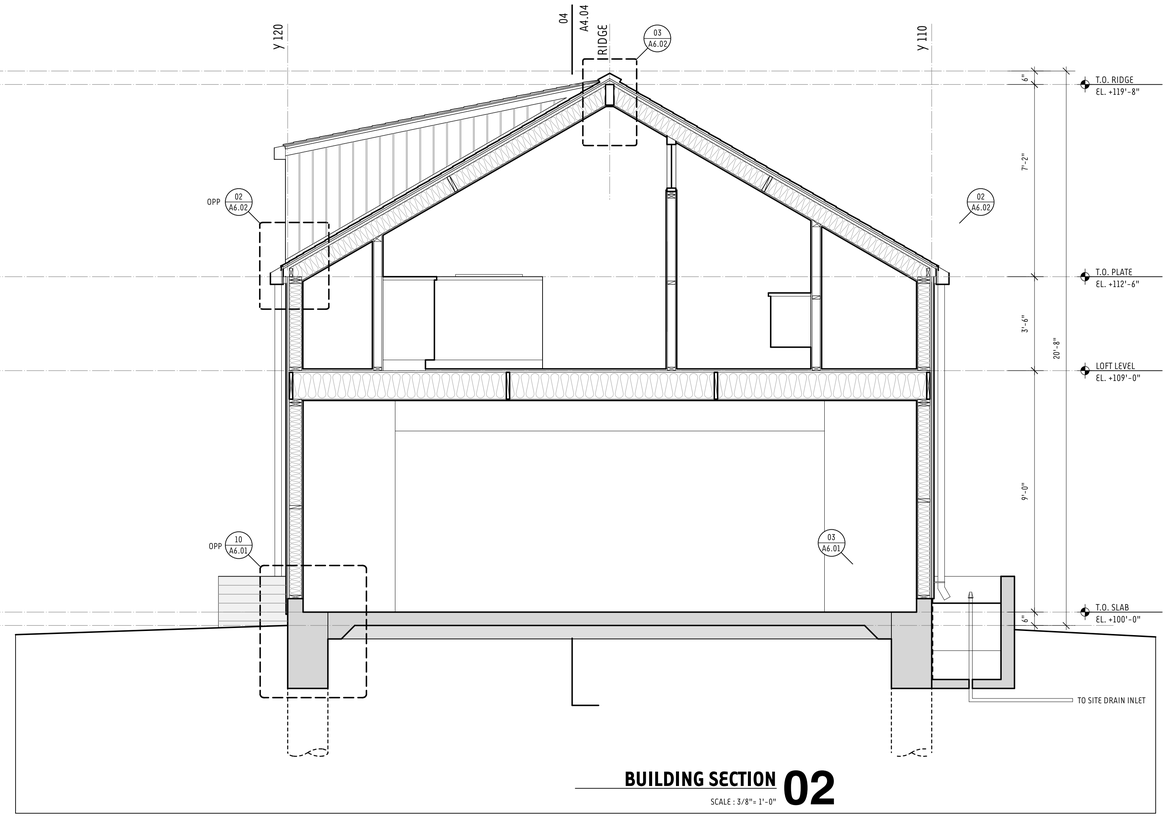

BUILDING SECTION 02

SCALE : 3/8"= 1'-0"

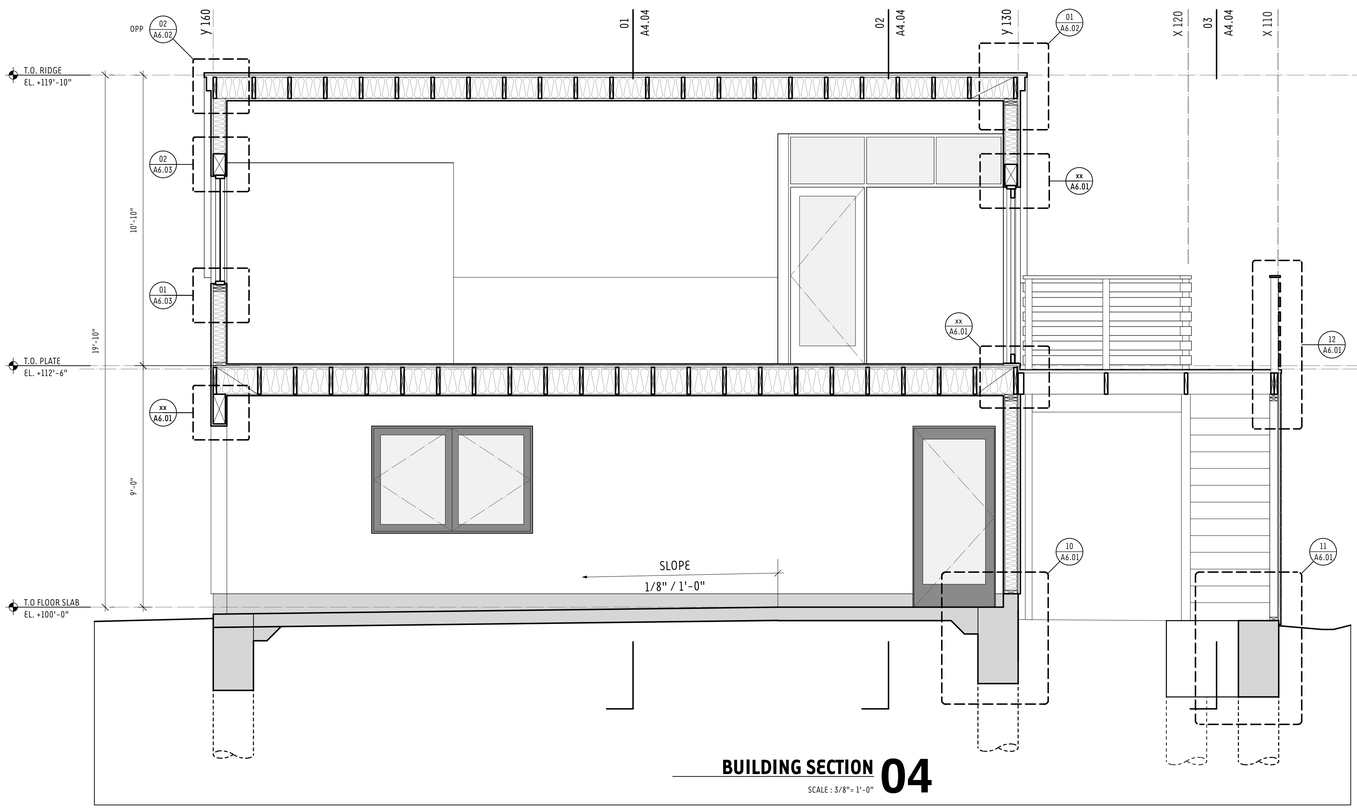

BUILDING SECTION 04

SCALE : 3/8"= 1'-0"

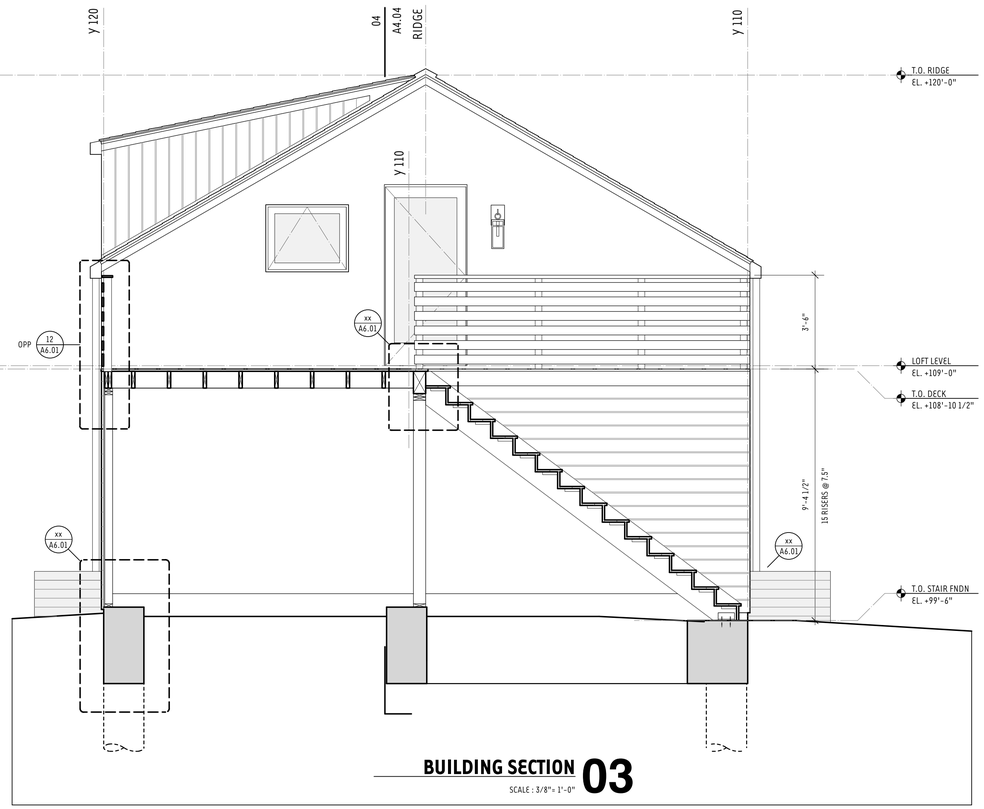

BUILDING SECTION 03

SCALE : 3/8"= 1'-0"

kras design studio

BLOCK RESIDENCE

1790 Sycamore Canyon Road
Santa Barbara, CA 93108

KRAS DESIGN STUDIO
116 E Yanonali Street, Unit A2
Santa Barbara, CA 93101
karl@krasdesignstudio.com

This document has been created by kras design studio, which retains all copyrights to the document. It may not be reproduced, distributed, displayed, modified or used by any other person for any purpose without the express written consent of the architect.

Revisions:

GARAGE/ADU SECTIONS

A4.04

10.10.19

WINDOW SCHEDULE

NO.	TYPE	DIMENSION WIDTH	DIMENSION HEIGHT	MATERIAL	FINISH	GLASS	MFG.	HEAD	JAMB	SILL	REMARKS
MAIN LEVEL											
01	A	5'-4"	8'-0"	ALUM-CLAD	BLACK	DUAL / LOW-E/ONE PANE TEMPERED	WEATHERSHIELD				
02	B	4'-4"	5'-6"	ALUM-CLAD	BLACK	DUAL / LOW-E/ONE PANE TEMPERED	WEATHERSHIELD				
03	B	4'-4"	5'-6"	ALUM-CLAD	BLACK	DUAL / LOW-E/ONE PANE TEMPERED	WEATHERSHIELD				
04	E	2'-0"	3'-0"	ALUM-CLAD	BLACK	DUAL / LOW-E/ONE PANE TEMPERED	WEATHERSHIELD				
05	D	5'-0"	5'-0"	ALUM-CLAD	BLACK	DUAL / LOW-E/ONE PANE TEMPERED	WEATHERSHIELD				
06	D	5'-0"	5'-0"	ALUM-CLAD	BLACK	DUAL / LOW-E/ONE PANE TEMPERED	WEATHERSHIELD				
07	E	2'-0"	3'-0"	ALUM-CLAD	BLACK	DUAL / LOW-E/ONE PANE TEMPERED	WEATHERSHIELD				
08	B	4'-0"	5'-0"	ALUM-CLAD	BLACK	DUAL / LOW-E/ONE PANE TEMPERED	WEATHERSHIELD				
09	B	4'-0"	5'-0"	ALUM-CLAD	BLACK	DUAL / LOW-E/ONE PANE TEMPERED	WEATHERSHIELD				
10	G	5'-0"	6'-0"	ALUM-CLAD	BLACK	DUAL / LOW-E/ONE PANE TEMPERED	WEATHERSHIELD				
11	E	2'-0"	3'-0"	ALUM-CLAD	BLACK	DUAL / LOW-E/ONE PANE TEMPERED	WEATHERSHIELD				
12											
13											
14											
15											
16											
LOFT LEVEL											
20	I	3'-0"	4'-0"	ALUM-CLAD	BLACK	DUAL / LOW-E/ONE PANE TEMPERED	WEATHERSHIELD				
21	J	3'-6"	4'-8"	ALUM-CLAD	BLACK	DUAL / LOW-E/ONE PANE TEMPERED	WEATHERSHIELD				
22	L	3'-0"	4'-0"	ALUM-CLAD	BLACK	DUAL / LOW-E/ONE PANE TEMPERED	WEATHERSHIELD				
23	L	3'-0"	4'-0"	ALUM-CLAD	BLACK	DUAL / LOW-E/ONE PANE TEMPERED	WEATHERSHIELD				
24											
25											
ROOF LEVEL											
30	K	4'-0"	6'-0"		BLACK	DUAL / LOW-E/ONE PANE TEMPERED	VELUX				

DOOR SCHEDULE

NO.	TYPE	DIMENSION WIDTH	DIMENSION HEIGHT	DIMENSION THICK	DOOR MATERIAL	DOOR FINISH	FRAME MATERIAL	FRAME FINISH	GLASS	HDWR	HEAD	JAMB	SILL	REMARKS
MAIN LEVEL														
01	A	3'-0"	8'-0"	1 3/4"	ALUM-CLAD	BLACK	ALUM-CLAD	BLACK	DUAL/LOW-E, SAFETY					
02	B	(3) 3'-4"	8'-0"	1 3/4"	ALUM-CLAD	BLACK	ALUM-CLAD	BLACK	DUAL/LOW-E, SAFETY					
03	C	(2) 3'-0"	8'-0"	1 3/4"	ALUM-CLAD	BLACK	ALUM-CLAD	BLACK	DUAL/LOW-E, SAFETY					
04	A	3'-0"	8'-0"	1 3/4"	ALUM-CLAD	BLACK	ALUM-CLAD	BLACK	DUAL/LOW-E, SAFETY					
05	A	3'-0"	8'-0"	1 3/4"	ALUM-CLAD	BLACK	ALUM-CLAD	BLACK	DUAL/LOW-E, SAFETY					
06	G	(2) 1'-6"	8'-0"	1 3/4"	SOLID WOOD	STAIN	WOOD	TBD						
07	I	2'-4"	7'-0"	3/8"	TEMP GLASS	—	—	—						
08	J	2'-8"	7'-0"	3/8"	TEMP GLASS	—	—	—						
09	K	2'-8"	7'-0"	1 3/4"	SOLID WOOD	STAIN	WOOD	TBD						
10	K	2'-8"	7'-0"	1 3/4"	SOLID WOOD	STAIN	WOOD	TBD						
11	K	2'-8"	7'-0"	1 3/4"	SOLID WOOD	STAIN	WOOD	TBD						
12	L	(2) 2'-0"	7'-0"	1 3/4"	SOLID WOOD	STAIN	WOOD	TBD						
13														
14														
GARAGE														
16	A	3'-0"	7'-0"	1 3/4"	ALUM-CLAD	BLACK	ALUM-CLAD	BLACK	DUAL/LOW-E, SAFETY					
17	E	16'-0"	7'-0"	1 3/4"	ALUM-CLAD	BLACK	ALUM-CLAD	BLACK	DUAL/LOW-E, SAFETY					
18	F	(2) 2'-6"	7'-0"	1 3/4"	SOLID WOOD	STAIN	WOOD	TBD						
19	A	3'-0"	7'-0"	1 3/4"	ALUM-CLAD	BLACK	ALUM-CLAD	BLACK	DUAL/LOW-E, SAFETY					

WINDOW NOTES

1. PROVIDE BUGS SCREENS BY WINDOW MANFACTURER AT ALL OPERABLE WINDOW LOCATIONS.
2. CONTRACTOR TO VERIFY ALL OPENING DIMENSIONS PRIOR TO WINDOW ORDER.
3. EGRESS NOTE: EVERY SLEEPING ROOM SHOULD HAVE AT LEAST ONE EXTERIOR DOOR OR WINDOW APPROVED FOR EMERGENCY ESCAPE/RESCUE. THE MINIMUM REQ. DIMENSIONS PER CBC 1029.2, 3 ARE: MIN. NET CLEAR OPENING OF 5.7 SQFT; MIN. CLEAR OPENING HEIGHT OF 24"; MAX. FINISHED SILL HEIGHT OF 44".
4. ALL HABITABLE ROOMS SHALL HAVE: EXTERIOR GLAZED OPENINGS WITH AN AREA OF AT LEAST 1/10 OF THE FLOOR AREA FOR LIGHT (10 SQFT MIN.) (CBC 1205.2) OPERABLE EXTERIOR OPENINGS WITH AN AREA AT LEAST 1/20 OF THE FLOOR AREA FOR VENTILATION (5 SQFT MIN.) (CBC 1203.4)
5. EXTERIOR WINDOWS SUBJECT TO CRC SECTION R327 ARE TO MULTI-PANE GLAZING WITH A MINIMUM OF TWO TEMPERED PANES OR HAVE A FIRE RESISTANCE RATING OF NOT LESS THAN 20 MINUTES WHEN TESTED IN ACCORDANCE WITH ASTM 257, OR CONFORM TO THE PERFORMANCE REQUIREMENTS OF SFM 12-7A-2.

REMARKS

1. EXISTING WINDOW TO REMAIN.
2. EXISTING WINDOW TO BE REPLACED.
3. SOLAR CONTROL.
4. SAFETY GLASS PER CRC R308.4
5. WINDOW REMOVED.
6. WINDOW OPENING CONTROL DEVICE PER CRC R312.2.2

DOOR NOTES

1. ALL DOORS WITH GLAZING TO BE APPROVED FOR HUMAN IMPACT HAZARD.
2. CONTRACTOR TO VERIFY ALL OPENING DIMENSIONS.
3. EXTERIOR DOOR ASSEMBLIES PURSUANT CRC SECTION R327 SHALL CONFORM TO THE PERFORMANCE REQUIREMENTS OF SFM 12-7A-1, SHALL BE OF APPROVED NONCOMBUSTIBLE OR IGNITION-RESISTANT MATERIALS.
4. GLAZING WITHIN EXTERIOR DOORS ARE TO BE MULTI-PANED TEMPERED OR HAVE FIRE RESISTANCE RATING OF NOT LESS THAN 20 MINUTES.

   ALL DOORS WITH GLAZING TO BE APPROVED FOR HUMAN IMPACT HAZARD.

REMARKS

1. POCKET DOOR.
2. REPLACE EXISTING DOOR WITH NEW DOOR.
3. EXISTING FRAME TO REMAIN.
4. EXISTING DOOR TO REMAIN.
5. SAFETY GLASS PER CRC R308.4

WINDOW TYPES

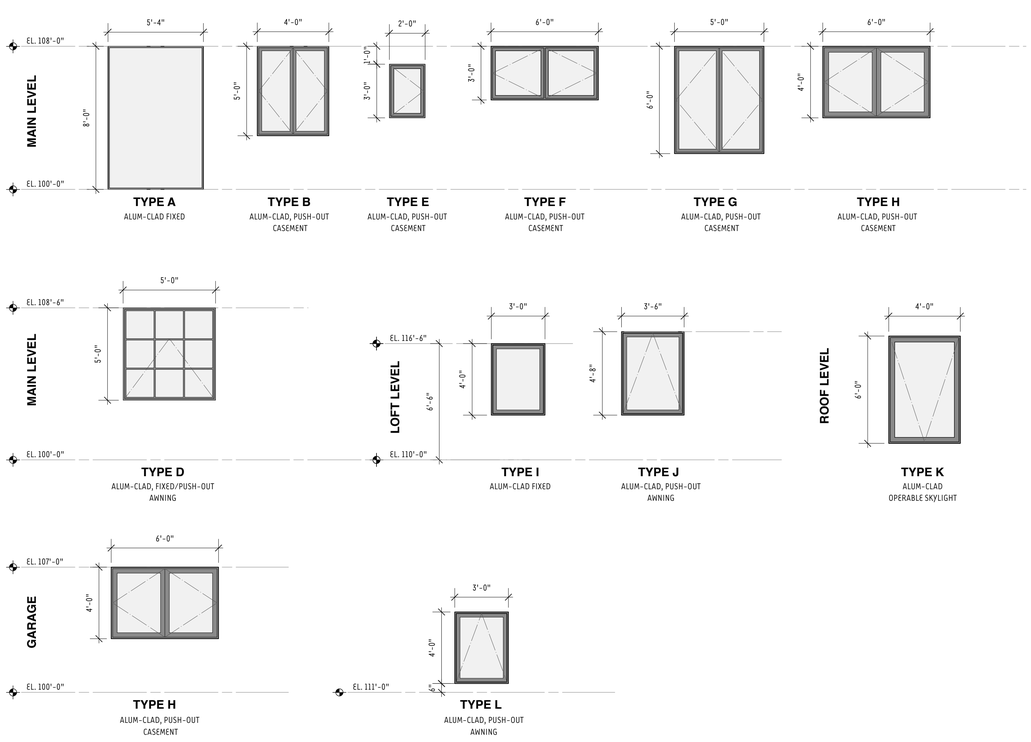

DOOR TYPES

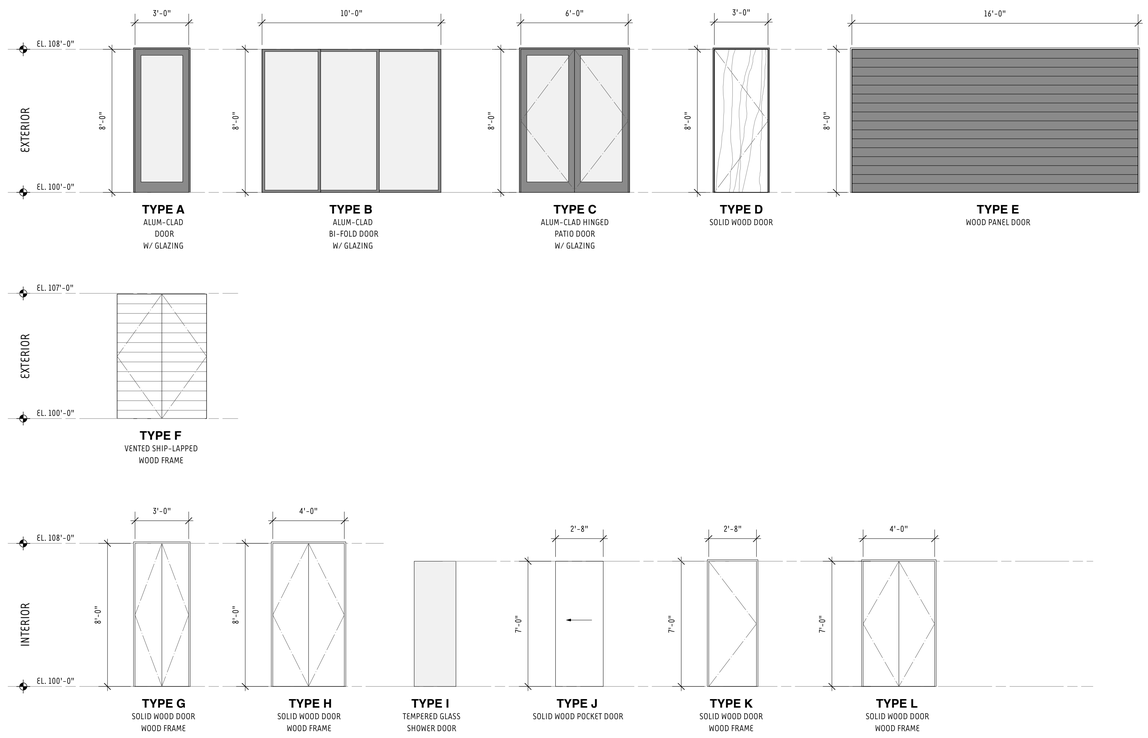

kras design studio

BLOCK RESIDENCE
1790 Sycamore Canyon Road
Santa Barbara, CA 93108

KRAS DESIGN STUDIO
116 E Yanonali Street, Unit A2
Santa Barbara, CA 93101
karl@krasdesignstudio.com

This document has been created by kras design studio, which retains all copyrights to the document. It may not be reproduced, distributed, displayed, modified or used by any other person for any purpose without the express written consent of the architect.

Revisions:

DOOR & WINDOW SCHEDULES

A5.02

10.10.19

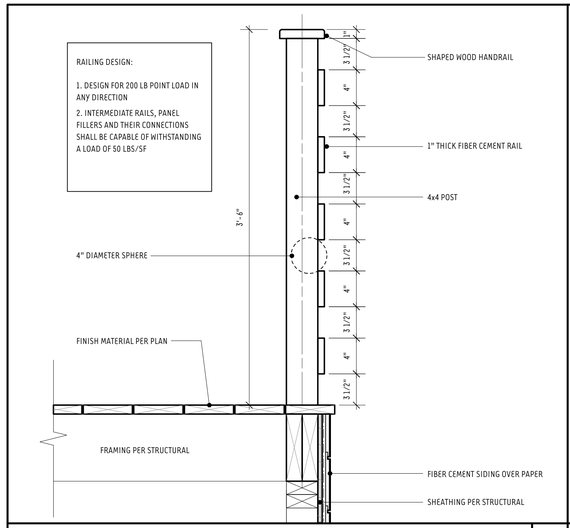

ADU DECK GUARD SECTION

SCALE: 1 1/2" = 1'-0" | 12

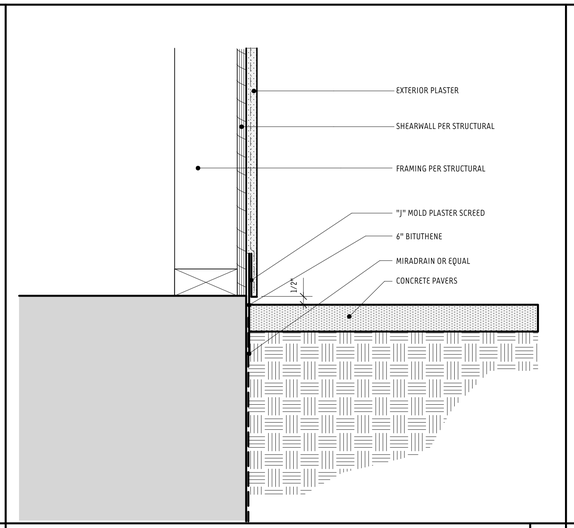

WEEP SCREED AT PAVING

SCALE: 3" = 1'-0" | 09

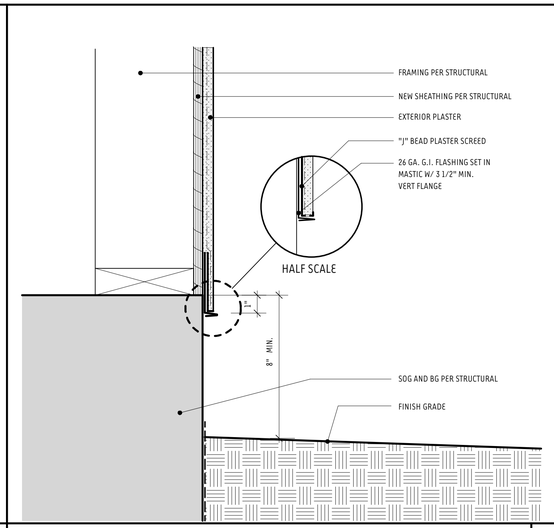

WEEP SCREED AT GRADE

SCALE: 3" = 1'-0" | 06

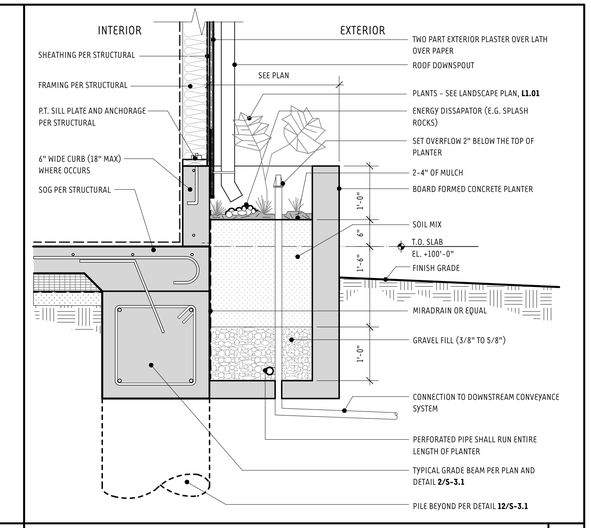

BMP PLANTER BOX DETAIL

SCALE: 3/4" = 1'-0" | 03

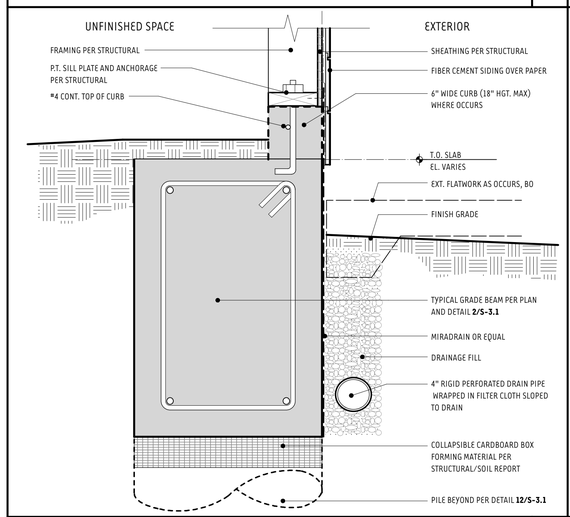

DECK WALL AT (N) EXTERIOR FOOTING

SCALE: 1 1/2" = 1'-0" | 11

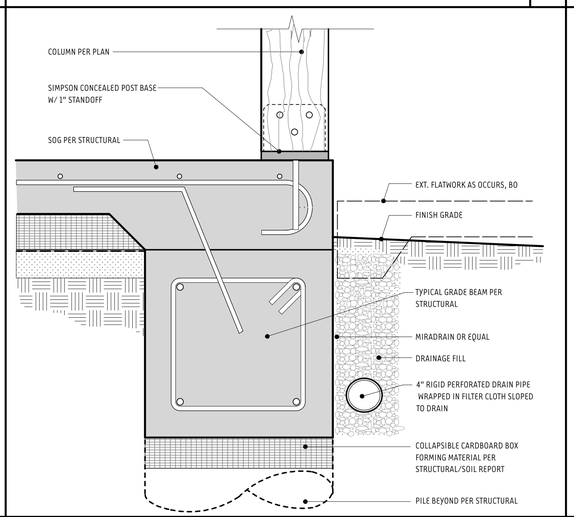

COLUMN AT EXTERIOR FOOTING

SCALE: 1 1/2" = 1'-0" | 08

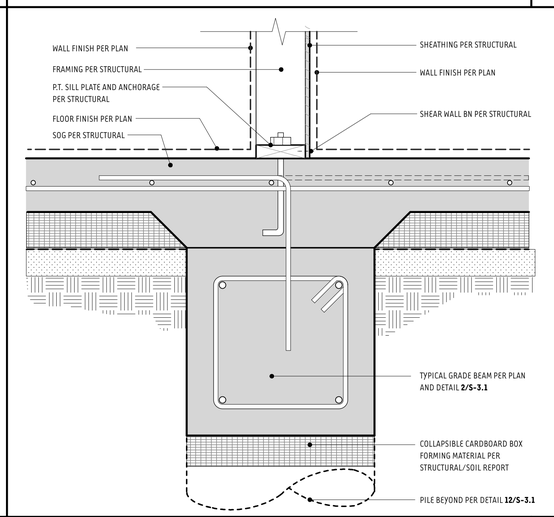

TYPICAL WALL AT (N) INTERIOR FOOTING

SCALE: 1 1/2" = 1'-0" | 05

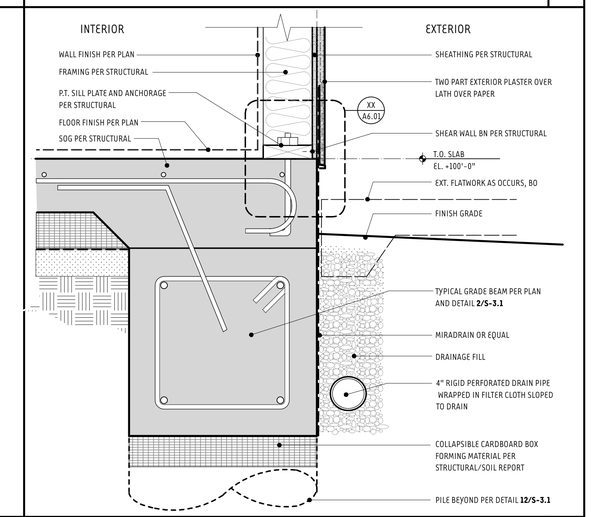

TYPICAL WALL AT EXTERIOR FOOTING

SCALE: 1 1/2" = 1'-0" | 02

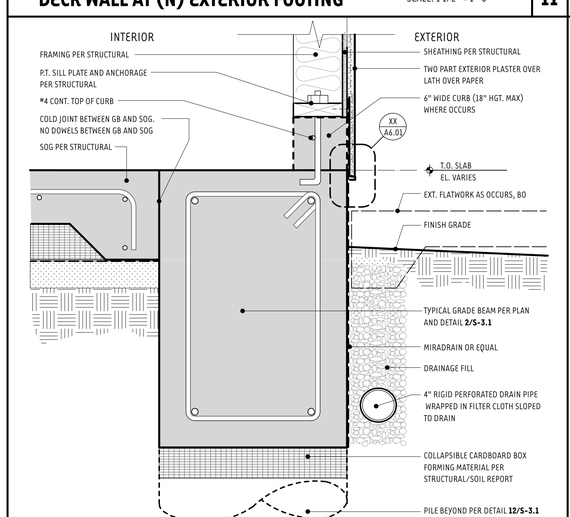

TYPICAL WALL AT (N) EXTERIOR FOOTING

SCALE: 1 1/2" = 1'-0" | 10

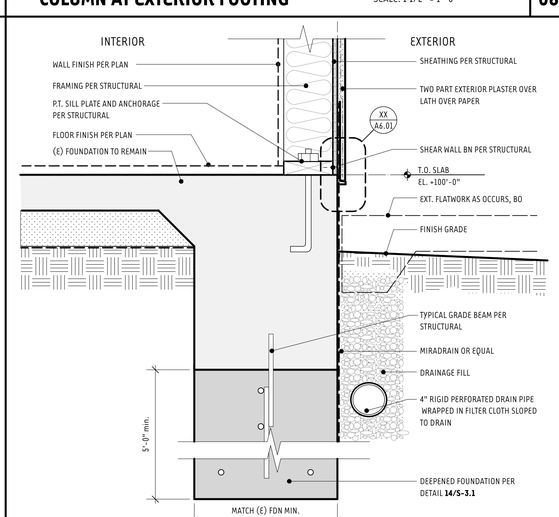

TYPICAL WALL AT DEEPENED FOUNDATION

SCALE: 1 1/2" = 1'-0" | 07

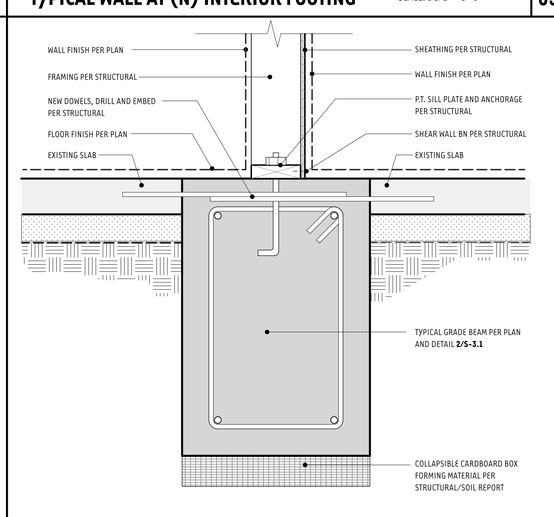

(N) INTERIOR FOOTING IN (E) SLAB

SCALE: 1 1/2" = 1'-0" | 04

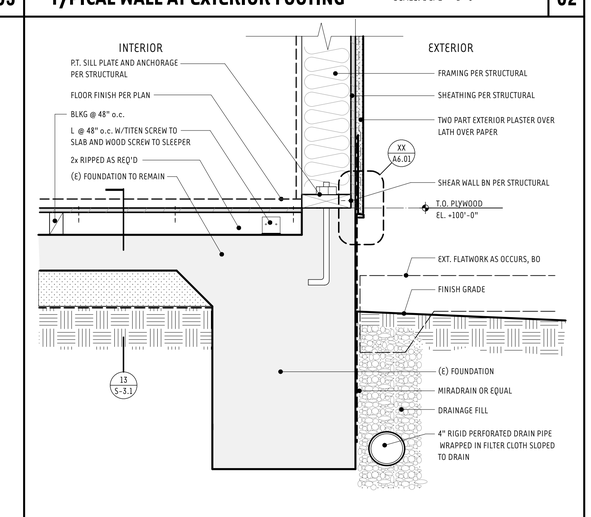

TYPICAL WALL AT (E) STEP IN SLAB

SCALE: 1 1/2" = 1'-0" | 01

kras design studio

BLOCK RESIDENCE

1790 Sycamore Canyon Road
Santa Barbara, CA 93108

KRAS DESIGN STUDIO
116 E Yanonali Street, Unit A2
Santa Barbara, CA 93101
karl@krasdesignstudio.com

This document has been created by kras design studio, which retains all copyrights to the document. It may not be reproduced, distributed, displayed, modified or used by any other person for any purpose without the express written consent of the architect.

Revisions:

EXTERIOR DETAILS

A6.01

10.10.19

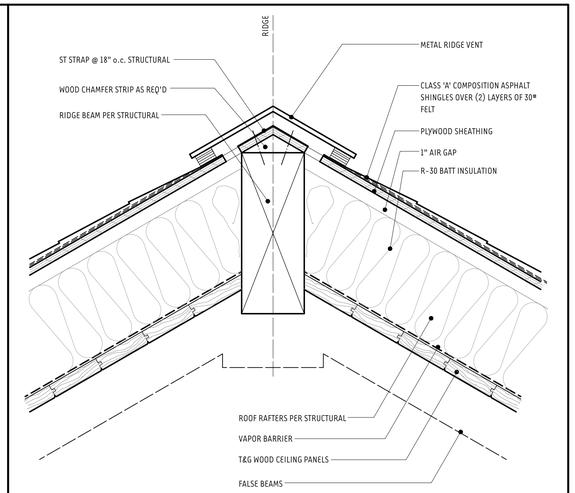

RIDGE DETAIL SCALE: 1 1/2" = 1'-0" **03**

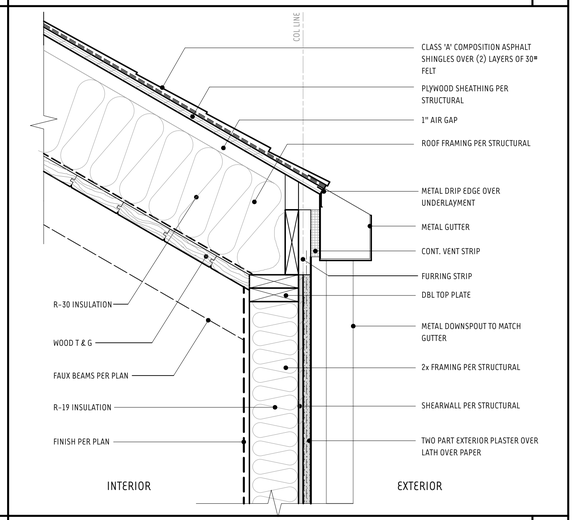

TYPICAL WALL AT EAVE SCALE: 1 1/2" = 1'-0" **02**

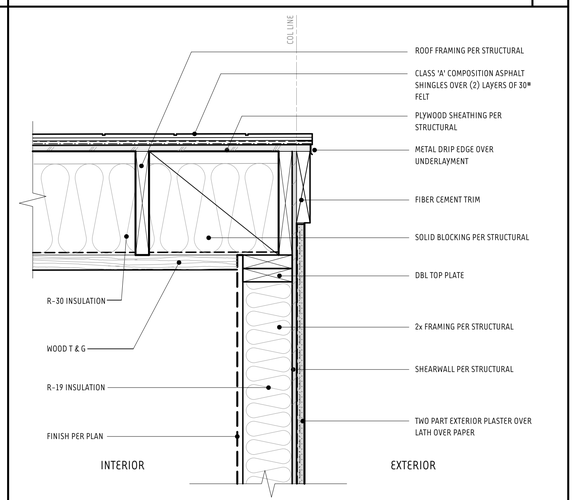

TYP METAL SIDING AT RAKE END SCALE: 1 1/2" = 1'-0" **01**

12 **09** **06** **11** **08** **05** **10** **07** **04**

kras design studio

BLOCK RESIDENCE
1790 Sycamore Canyon Road
Santa Barbara, CA 93108

KRAS DESIGN STUDIO
116 E Yanonali Street, Unit A2
Santa Barbara, CA 93101
karl@krasdesignstudio.com

This document has been created by kras design studio, which retains all copyrights to the document. It may not be reproduced, distributed, displayed, modified or used by any other person for any purpose without the express written consent of the architect.

Revisions:

EXTERIOR DETAILS

A6.02

10.10.19

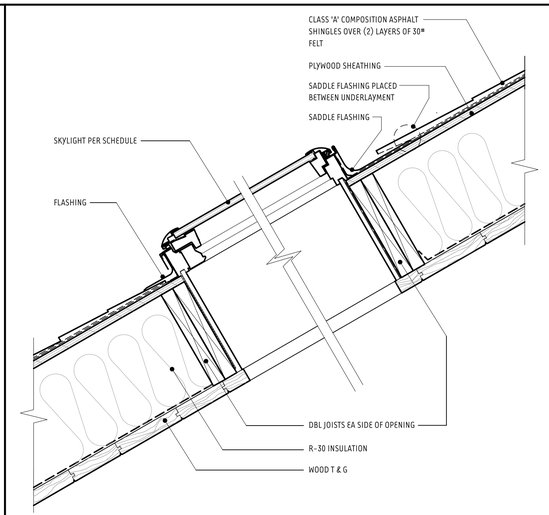

SKYLIGHT DETAIL SCALE: 1 1/2" = 1'-0" **06**

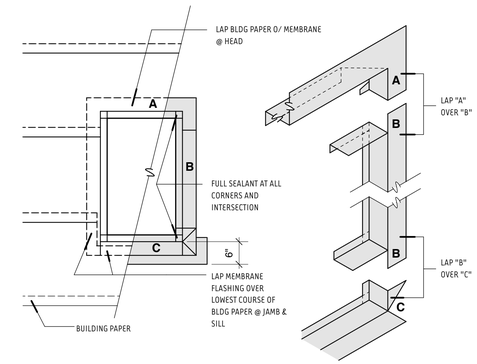

GENERAL NOTE:
"MEMBRANE FLASHING" REFERS TO SELF ADHESIVE LAMINATED BITUMINOUS WATERPROOF MEMBRANE,

TYPICAL MEMBRANE FLASHING @ OPENINGS HALF SCALE **03**

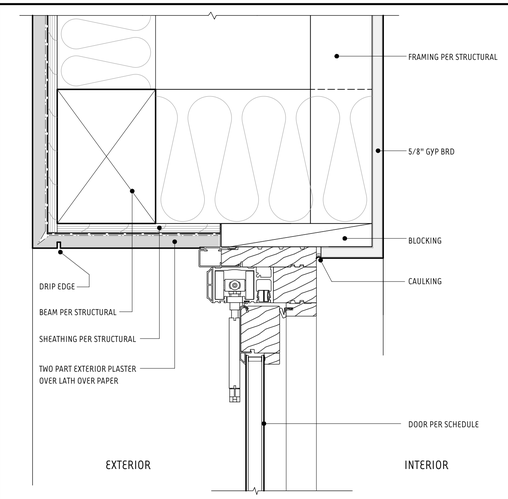

EXTERIOR BI-FOLD DOOR HEAD SCALE: 3" = 1'-0" **05**

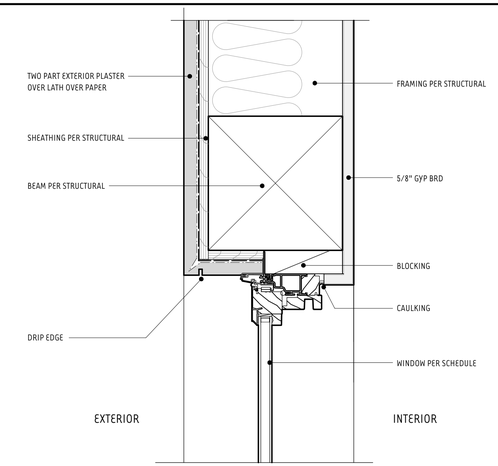

TYPICAL FRENCH CASEMENT HEAD SCALE: 3" = 1'-0" **02**

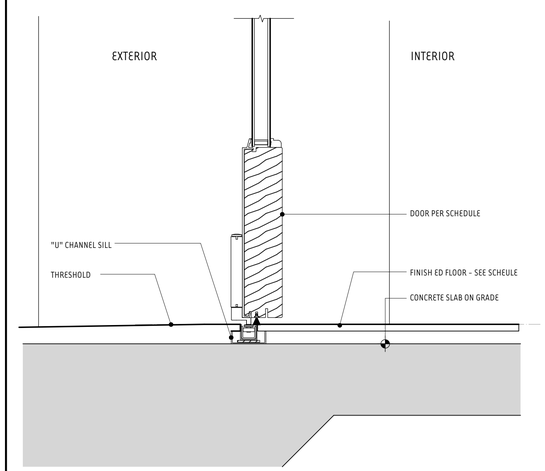

EXTERIOR BI-FOLD DOOR SILL SCALE: 3" = 1'-0" **04**

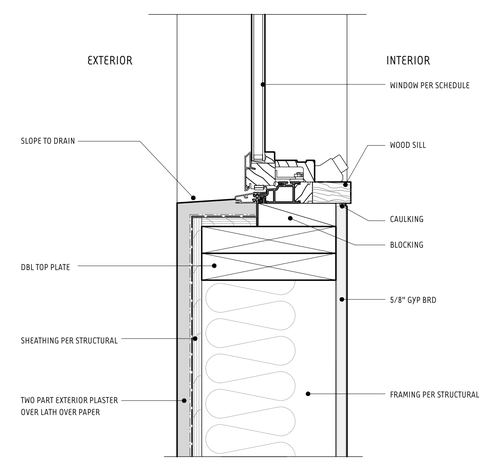

TYPICAL FRENCH CASEMENT SILL SCALE: 3" = 1'-0" **01**

12 09 11 08 10 07

kras design studio

BLOCK RESIDENCE
1790 Sycamore Canyon Road
Santa Barbara, CA 93108

KRAS DESIGN STUDIO
116 E Yanonali Street, Unit A2
Santa Barbara, CA 93101
karl@krasdesignstudio.com

This document has been created by kras design studio, which retains all copyrights to the document. It may not be reproduced, distributed, displayed, modified or used by any other person for any purpose without the express written consent of the architect.

Revisions:
○
○
○
△
△
△

DOOR & WINDOW DETAILS

A6.03
10.10.19

FIXTURE SCHEDULE

TYPE	LUMINAIRE DESCRIPTION	MANUFACTURER/ CATALOG NUMBER	LAMP		LAMP MANUF. CATALOG #	VOLTS	FINISH	LOCATION & NOTES
			QUANITY	WATTS				
L-1	EXTERIOR SCONSE	HINKLEY PORTER HKYP155086 - MEDIUM	-	75W			OIL RUBBED BRONZE	EXTERIOR OF HOUSE AND GARAGE
L-2	EXTERIOR SCONSE	HINKLEY PORTER HKYP155086 - LARGE		75W			OIL RUBBED BRONZE	ENTRY GATE COLUMNS
L-3	EXTERIOR RECESSED DOWNLIGHT	WAC LIGHTING FM-2605-BZ		16W			BRONZE	ENTRY SOFFIT, CONNECTED TO ASTRONOMICAL TIME CLOCK

BONDING DIAGRAM

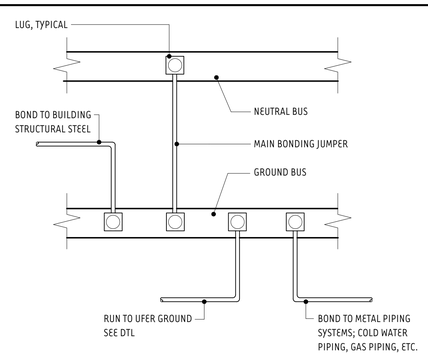

UFER GROUND DETAIL

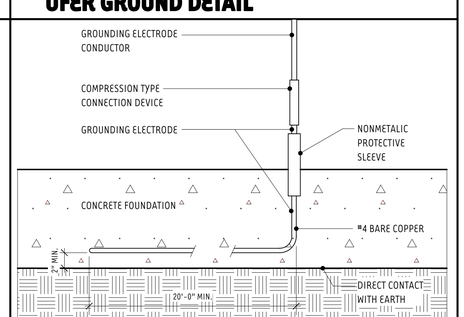

THE GROUNDING SYSTEM SHALL CONSIST OF A "UFER" TYPE 20' LONG OF #4 BARE COPPER CONDUCTOR EMBEDDED ALONG THE BOTTOM OF A CONCRETE FOOTING OR GRADE BEAM THAT IS IN DIRECT CONTACT WITH THE EARTH

GENERAL NOTES

E1. VISIT JOB SITE AND VERIFY EXISTING CONDITIONS PRIOR TO BID.

E2. ALL ELECTRICAL WORK SHALL BE INSTALLED IN ACCORDANCE WITH THE NATIONAL ELECTRIC CODE AND ALL APPLICABLE LOCAL ORDINANCES WHERE PLANS CALL FOR A HIGHER STANDARD THAN APPLICABLE CODES, THE PLANS SHALL GOVERN.

E3. CONDUIT RUNS ARE SHOWN DIAGRAMMATICALLY. EXACT LOCATIONS SHALL BE DETERMINED IN THE FIELD TO SUIT FIELD CONDITIONS.

E4. ALL ELECTRICAL EQUIPMENT, APPLIANCES AND LIGHTING FIXTURES SHALL BE LISTED BY A RECOGNIZED TEST LAB AND BEAR THAT LABEL OF APPROVAL.

E5. CONTRACTOR SHALL FURNISH, INSTALL AND CONNECT ALL MATERIAL AND EQUIPMENT FOR THE WORK UNLESS NOTED OTHERWISE.

E6. FURNISH DISCONNECT SWITCHES AT REMOTE MOTORS.

E7. ALL SPACES AS INDICATED ON PANELS OR SWITCHBOARDS SHALL BE COMPLETE WITH HARDWARE AND BUSSING FOR FUTURE BREAKER OR SWITCH.

E8. CHECK ARCHITECTURAL PLANS FOR DOOR SWINGS BEFORE INSTALLING SWITCH OUTLETS.

E9. GROUNDING AND BONDING SHALL BE PER CODE PLUS ANY ADDITIONAL PROVISIONS SPECIFIED OR SHOWN ON DRAWINGS.

E10. GROUNDING AND BONDING SHALL BE PER CODE PLUS ANY ADDITIONAL PROVISIONS SPECIFIED OR SHOWN ON DRAWINGS.

E11. ALL CONDUCTORS SHALL BE IN CONDUIT.

E12. ALL CONDUCTORS SHALL BE COPPER WITH TYPE/THHN/THWN INSULATION.

E13.ARC-FAULT CIRCUIT INTERRUPTER OUTLETS: ALL BRANCH CIRCUITS THAT SUPPLY 125-VOLT, SINGLE PHASE, 15 AND 20 AMPERE OUTLETS INSTALLED IN DWELLING UNIT FAMILY ROOMS, DINING ROOMS, LIVING ROOMS, PARLORS, LIBRARIES, DENS, BEDROOMS, SUNROOMS, RECREATION ROOMS, CLOSETS, HALLWAYS OR SIMILAR ROOMS OR AREAS SHALL BE PROTECTED BY AN ARC-FAULT CIRCUIT INTERRUPTER(S).

E14. RECEPTACLES IN WET LOCATIONS TO HAVE AN ENCLOSURE THAT IS WEATHERPROOF WHETHER OR NOT THE ATTACHMENT PLUG IS INSERTED.

E15. WHEN ADDITION OR ALTERATION EXCEEDS $1,000, SMOKE DETECTORS ARE REQUIRED IN AREAS PROVIDING ACCESS TO EXISTING SLEEPING ROOMS AND IN EXISTING SLEEPING ROOMS. THESE SMOKE DETECTORS MAY BE BATTERY OPERATED ONLY.

E16. N/A

E17. N/A

E18. N/A

E19. BATHROOM RECEPTACLES: OUTLETS SHALL BE SUPPLIED BY AT LEAST ONE 20-AMP BRANCH CIRCUIT. SUCH CIRCUITS SHALL HAVE NO OTHER OUTLETS.

E20. ALL INTERIOR RESIDENTIAL LIGHTING TO BE HIGH EFFICACY.

E21. THE FOLLOWING LIGHTING IS HIGH EFFICACY:
- PIN-BASED LINEAR FLUORESCENT
- PIN-BASED COMPACT FLUORESCENT
- PULSE-START METAL HALIDE
- HIGH PRESSURE SODIUM
- GU-24 (OTHER THAN LED'S)
- INSEPARABLE SOLID STATE LUMINAIRES (SSL'S) INSTALLED OUTDOORS
- INSEPARABLE SSL LUMINAIRES WITH COLORED LIGHT SOURCES FOR DECORATIVE PURPOSES

E22. THE FOLLOWING LAMPS AND LIGHT SOURCES ARE HIGH EFFICACY IF THEY ARE JOINT APPENDIX JA-8 CERTIFIED. JA-8 CERTIFIED LAMPS AND LIGHT SOURCES ARE MARKED "JA8-2016" OR "JA8-2016-E". THESE FIXTURES INCLUDE:
- LED LUMINAIRES WITH INTEGRAL SOURCES THAT ARE CERTIFIED TO THE ENERGY COMMISSION
- SCREW-BASED LED LAMPS (A-LAMPS, PAR LAMPS, ETC.)
- PIN-BASED LED LAMPS (MR-16, AR-11, ETC.)
- GU-24 BASED LED LIGHT SOURCES AND OTHER LUMINAIRES

E23. ADDITIONAL REQUIREMENTS FOR ANY RECESSED DOWNLIGHTS IN CEILINGS ARE AS FOLLOWS. THEY 1) SHALL NOT HAVE SCREW-BASED SOCKETS, 2) SHALL CONTAIN JA8-CERTIFIED LIGHT SOURCES AND 3) SHALL MEET PERFORMANCE REQUIREMENTS OF CEC SECTION 150.0(K)1C.

E24. EXCEPT FOR CLOSETS LESS THAN 70 SQUARE FEET AND HALLWAYS, ALL LUMINAIRES THAT ARE INSTALLED WITH JA8-CERTIFIED LIGHT SOURCES ARE REQUIRED TO BE CONTROLLED BY EITHER A DIMMER OR VACANCY SENSOR.

E25. AT LEAST ONE LUMINAIRE IN EACH BATHROOM, GARAGE, LAUNDRY ROOM, AND UTILITY ROOM SHALL BE CONTROLLED BY A MANUAL ON/AUTOMATIC-OFF VACANCY SENSOR.

E26. OUTDOOR LIGHTING PERMANENTLY MOUNTED TO A SINGLE FAMILY DWELLING OR OTHER BUILDINGS IN THE SAME LOT SHALL BE HIGH EFFICACY **AND** MUST BE CONTROLLED BY AN ON/OFF SWITCH THAT DOES **NOT** OVERRIDE TO **ON** THE ITEMS LISTED BELOW. ALSO, THE LIGHTING MUST BE BY ONE OF THE FOLLOWING METHODS:

i) CONTROLLED BY A PHOTOCELL AND MOTION SENSER. CONTROLS THAT OVERRIDE TO **ON** SHALL NOT BE ALLOWED UNLESS THE OVERRIDE AUTOMATICALLY REACTIVATES THE MOTION SENSOR WITHIN 6 HOURS, **OR**

ii) CONTROLLED BY THE FOLLOWING:
- (1) PHOTOCELL AND AUTOMATIC TIME SWITCH CONTROL. CONTROLS THAT OVERRIDE TO **ON** SHALL NOT BE ALLOWED UNLESS THE OVERRIDE AUTOMATICALLY RETURN THE PHOTOCONTROL AND AUTOMATIC TIME SWITCH CONTROL TO ITS NORMAL OPERATION WITHIN 6 HOURS, **OR**
- (2) ASTRONOMICAL TIME CLOCK. CONTROLS THAT OVERRIDE TO **ON** SHALL NOT BE ALLOWED UNLESS THE OVERRIDE AUTOMATICALLY RETURN THE ASTRONOMICAL CLOCK ITS NORMAL OPERATION WITHIN 6 HOURS AND WHICH IS PROGRAMMED TO AUTOMATICALLY TURN THE OUTDOOR LIGHTING OFF DURING DAYLIGHT HOURS, **OR**
- (3) ENERGY MANAGEMENT CONTROL SYSTEM WHICH MEETS ALL OF THE FOLLOWING REQUIREMENTS. AT A MINIMUM PROVIDES THE FUNCTIONALITY OF AN ASTRONOMICAL TIME CLOCK IN ACCORDANCE WITH SECTION 110.9 OF THE STANDARDS; MEETS THE INSTALLATION CERTIFICATE REQUIREMENTS IN SECTION 130.4 OF THE STANDARDS; MEETS THE REQUIREMENTS FOR AN EMCS IN SECTION 130.5 OF THE STANDARDS; DOES NOT HAVE AN OVERRIDE OR BYPASS SWITCH THAT ALLOWS THE LUMINAIRE TO BE ALWAYS **ON**; AND, IS PROGRAMMED TO AUTOMATICALLY TURN THE OUTDOOR LIGHTING **OFF** DURING DAYLIGHT HOURS.

E27. N/A

E28. CALIFORNIA ENERGY COMMISSION'S APPROVAED LISTING OF ALL LIGHT FIXTURES ARE TO BE AVAILABLE ON THE JOB SITE AT TIME OF INSPECTION.

E29. LUMINAIRES THAT ARE RECESSED INTO INSULATED CEILINGS ARE APPROVED, IC LUMINAIRES AND ARE CERTIFIED AND LABELED AS AIRTIGHT TO THE STANDARDS PRESCRIBED BY THE RESIDENTIAL ENERGY CODE.

E30. COORDINATE WITH SERVING ELECTRICAL UTILITY COMPANY AND MAKE PROVISIONS FOR ELECTRICAL SERVICE ACCORDINGLY. INCLUDE ALL SERVICE COSTS AND UTILITY COMPANY CHARGES IN BID.

E31. COORDINATE WITH SERVING TELEPHONE UTILITY COMPANY AND MAKE PROVISIONS FOR TELEPHONE SERVICE ACCORDINGLY. INCLUDE ALL SERVICE COSTS AND UTILITY COMPANY CHARGES IN BID.

E32. COORDINATE WITH SERVING CABLE COMPANY AND MAKE PROVISIONS FOR CABLE SERVICE ACCORDINGLY. INCLUDE ALL SERVICE COSTS AND UTILITY COMPANY CHARGES IN BID.

E33. ALL PERMITS SHALL BE OBTANED AND PAID FOR BY CONTRACTOR.

E34. ALL 125-VOLT, 15 AND 20 AMPERE RECEPTACLES IN A DWELLING UNIT SHALL BE LISTED TAMPER-RESISTANT RECEPTACLES.

E35. PROVIDE SIGNAGE AT PANEL A AND TRANSFER SWITCH INDICATING SOURCES OF POWER AND LOCATIONS OF DISCONNECTING MEANS.

E36. PROVIDE AND MAINTAIN MINIMUM 36" DEEP BY 30" WIDE CLEAR WORKING SPACE IN FRONT OF ALL ELECTRICAL EQUIPMENT.

E37. WHERE BRANCH-CIRCUIT WIRING IS MODIFIED, REPLACED OR EXTENDED IN AREAS SPECIFIED IN CEC 210.12(A), THE BRANCH CIRCUIT SHALL BE PROTECTED BY EITHER A LISTED COMBINATION-TYPE AFCI LOCATED AT THE ORIGIN OF THE BRANCH CIRCUIT OR A LISTED OUTLET BRANCH TYPE AFCI LOCATED AT THE FIRST RECEPTACLE OF THE EXISTING BRANCH CIRCUIT.

ELECTRICAL SYMBOLS

- E — 200 AMP MAIN ELECTRICAL PANEL, WEATHERPROOF
- FLUORESCENT FIXTURE
- 2 x 4 FLUORESCENT FIXTURE
- RECESSED STEP LIGHT
- TELEPHONE OUTLET
- FLOOR TELEPHONE OUTLET
- T — THERMOSTAT
- S — SMOKE DETECTOR, 110 VOLT (HARDWIRED) WITH BATTERY BACK-UP
- CO — CARBON MONOXIDE DETECTOR, 110 VOLT (HARDWIRED) WITH BATTERY BACK-UP
- P — PIGTAIL
- J — J-BOX
- B — DOORBELL BUTTON
- C — DOORBELL CHIME
- TV — CABLE TELEVISION
- T — TIME CONTROL CLOCK
- TRACK LIGHTING
- EXHAUST FAN
- FAN/LIGHT UNIT
- HEAT/LIGHT UNIT
- EXTERIOR LIGHT FIXTURE
- EXTERIOR LIGHT FIXTURE
- 120 V DUPLEX TAMPER RESISTANT OUTLET
- 120 V DUPLEX TAMPER RESISTANT OUTLET TOP HALF SWITCH
- 120 V FOURPLEX TAMPER RESISTANT OUTLET
- 120 V FLOOR OUTLET
- WP — 120 V WEATHERPROOF DUPLEX TAMPER RESISTANT OUTLET
- GFI — 120 V GROUND FAULT CIRCUIT INTERRUPTER, TAMPER RESISTANT
- AFI — 120 V ARC FAULT CIRCUIT INTERRUPTER, TAMPER RESISTANT
- 220 — 220 V DUPLEX TAMPER RESISTANT OUTLET
- S — SINGLE POLE SWITCH
- S3 — THREE-WAY SWITCH
- S4 — FOUR-WAY SWITCH
- D — SINGLE POLE DIMMER SWITCH
- OS — SINGLE POLE SWITCH W/ OCCUPANCY SENSOR
- CEILING SURFACE MOUNTED LIGHT FIXTURE
- WP — WATERPROOF OVERHEAD LIGHT FIXTURE
- WALL MOUNTED LIGHT FIXTURE
- RECESSED OVERHEAD LIGHT FIXTURE
- RECESSED OVERHEAD WALL WASHER
- RECESSED DOWNLIGHT - LOW VOLTAGE
- FG — GAS OUTLET

kras design studio

BLOCK RESIDENCE
1790 Sycamore Canyon Road
Santa Barbara, CA 93108

KRAS DESIGN STUDIO
116 E Yanonali Street, Unit A2
Santa Barbara, CA 93101
karl@krasdesignstudio.com

This document has been created by kras design studio, which retains all copyrights to the document. It may not be reproduced, distributed, displayed, modified or used by any other person for any purpose without the express written consent of the architect.

Revisions:

ELECTRICAL GENERAL NOTES

E1.00

10.10.19

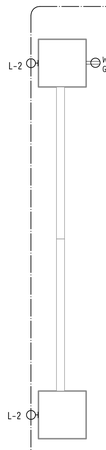

ENTRY GATE/COLUMNS ELEC/POWER PLAN 03

SCALE : 1/4"= 1'-0"

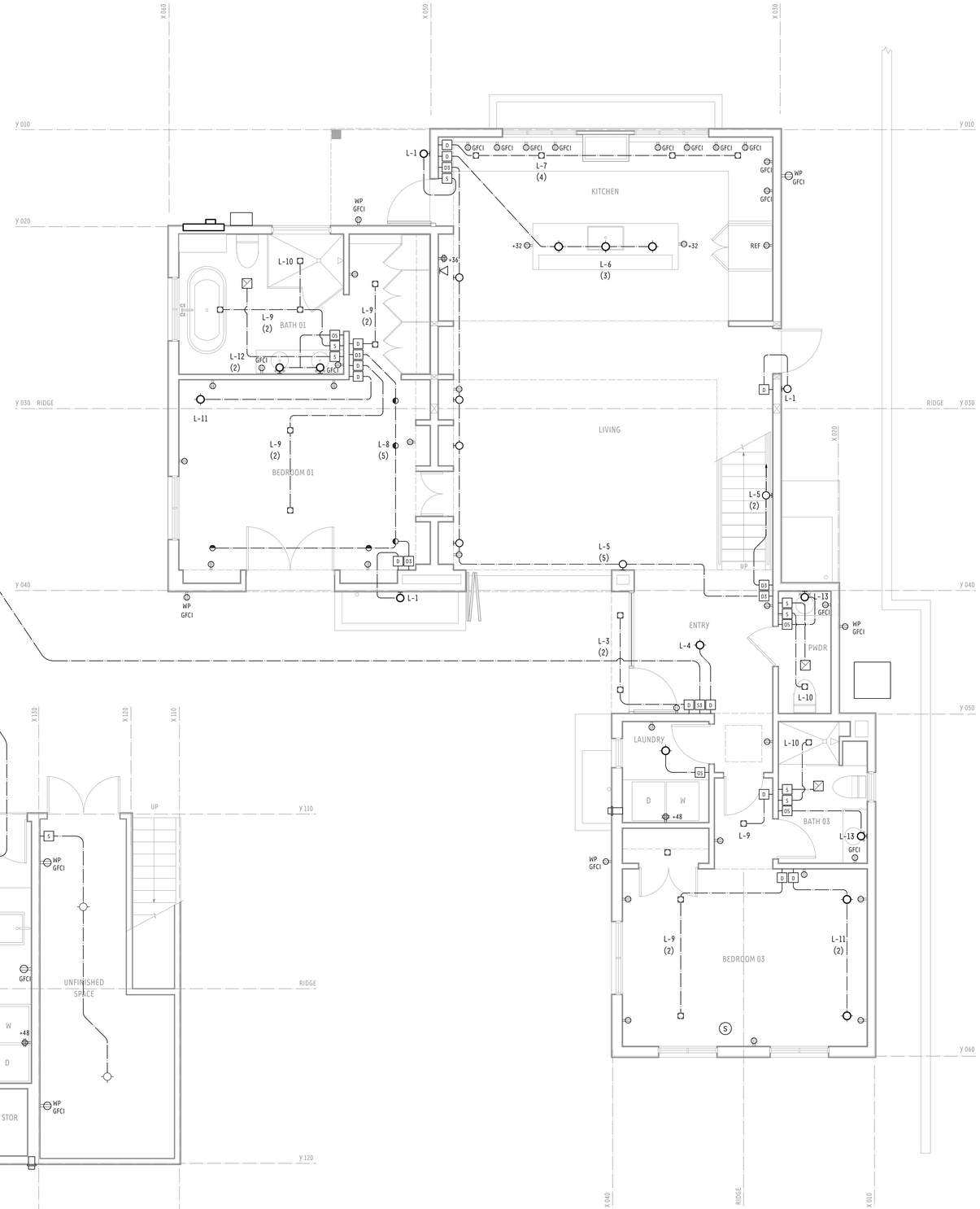

MAIN RESIDENCE - FIRST LEVEL LIGHTING & POWER PLAN 01

SCALE : 1/4"= 1'-0"

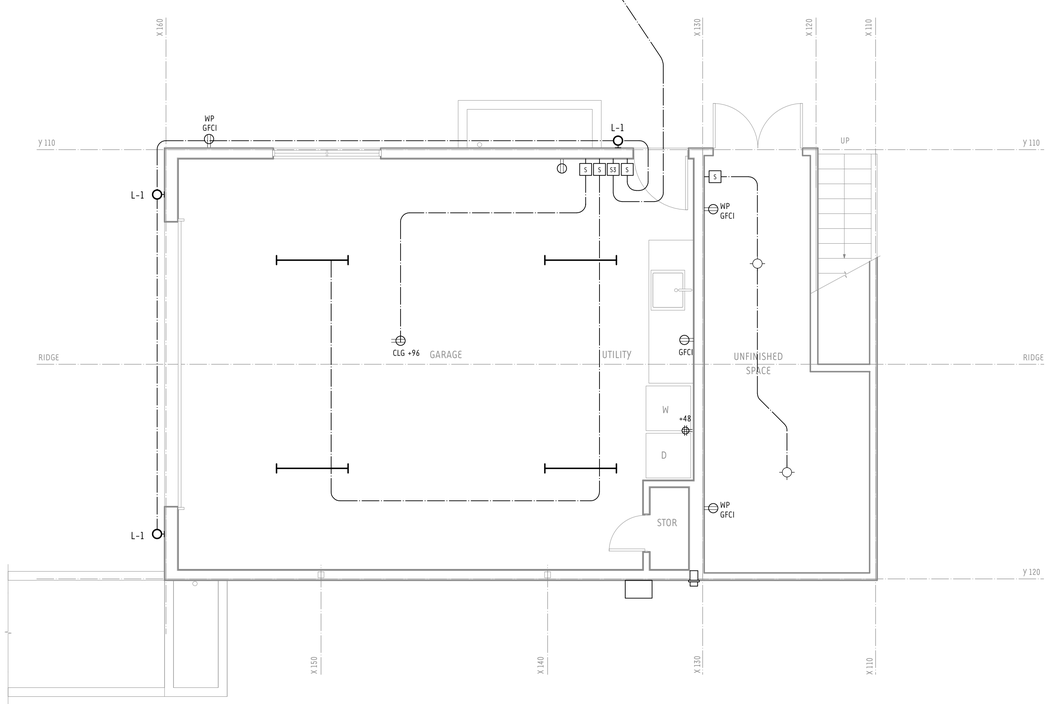

GARAGE - FIRST LEVEL LIGHTING & POWER PLAN 02

SCALE : 1/4"= 1'-0"

N

kras design studio

BLOCK RESIDENCE

1790 Sycamore Canyon Road
Santa Barbara, CA 93108

KRAS DESIGN STUDIO
116 E Yanonali Street, Unit A2
Santa Barbara, CA 93101
kari@krasdesignstudio.com

This document has been created by kras design studio, which retains all copyrights to the document. It may not be reproduced, distributed, displayed, modified or used by any other person for any purpose without the express written consent of the architect.

Revisions:

ELECTRICAL LIGHTING & POWER PLAN

E1.01

10.10.19

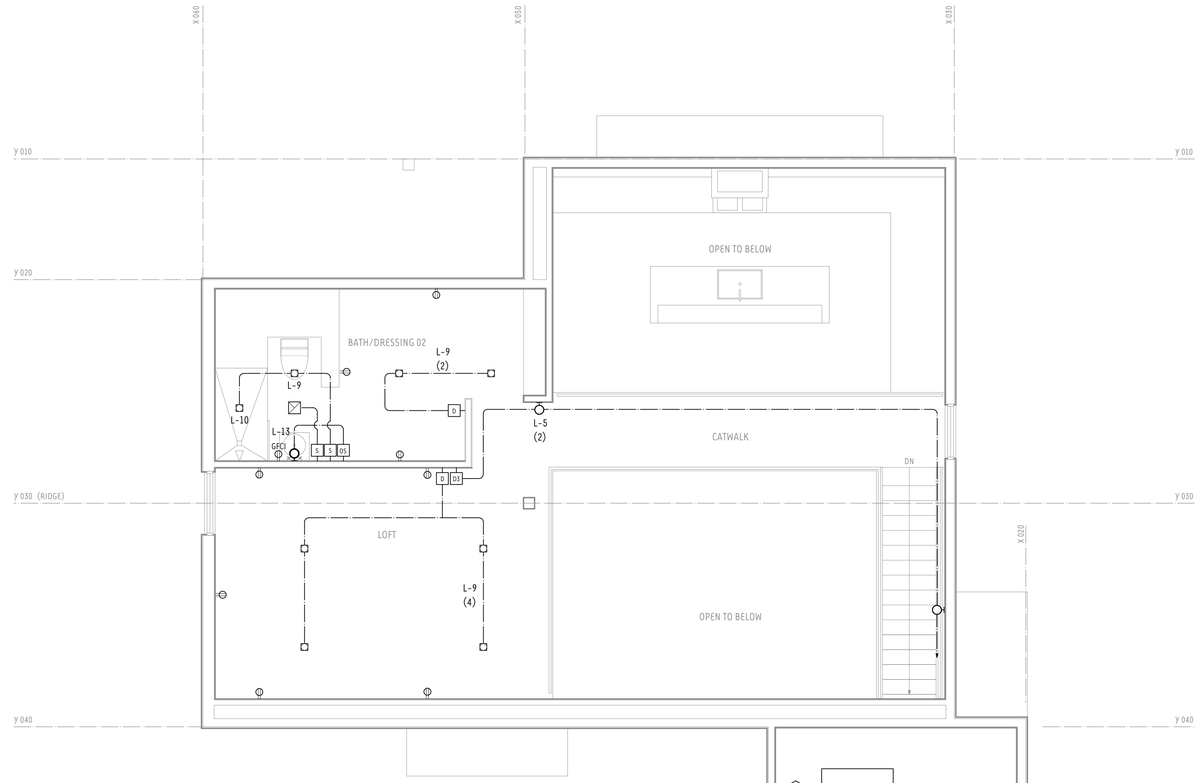

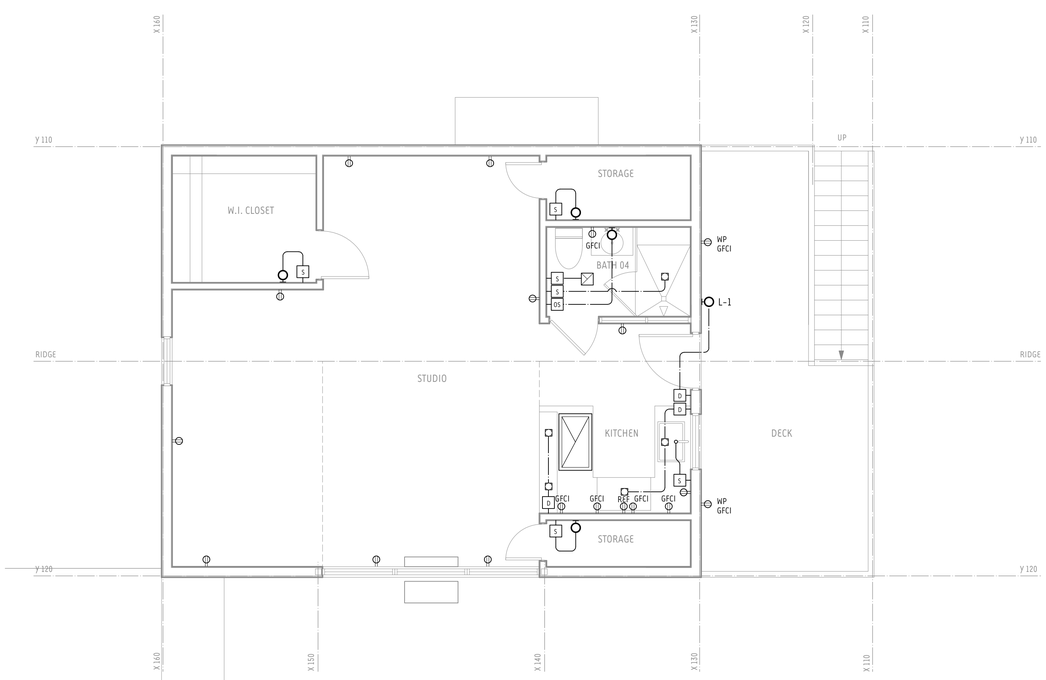

ADU - SECOND LEVEL LIGHTING/POWER PLAN 02

SCALE : 1/4"= 1'-0"

N

MAIN RESIDENCE - SECOND LEVEL LIGHTING/POWER PLAN 01

SCALE : 1/4"= 1'-0"

kras design studio

BLOCK RESIDENCE

1790 Sycamore Canyon Road
Santa Barbara, CA 93108

KRAS DESIGN STUDIO
116 E Yanonali Street, Unit A2
Santa Barbara, CA 93101
kar@krasdesignstudio.com

This document has been created by kras design studio, which retains all copyrights to the document. It may not be reproduced, distributed, displayed, modified or used by any other person for any purpose without the express written consent of the architect.

Revisions:

○
○
○
△
△
△

ELECTRICAL LIGHTING & POWER PLAN

E1.02

10.10.19

MECHANICAL NOTES

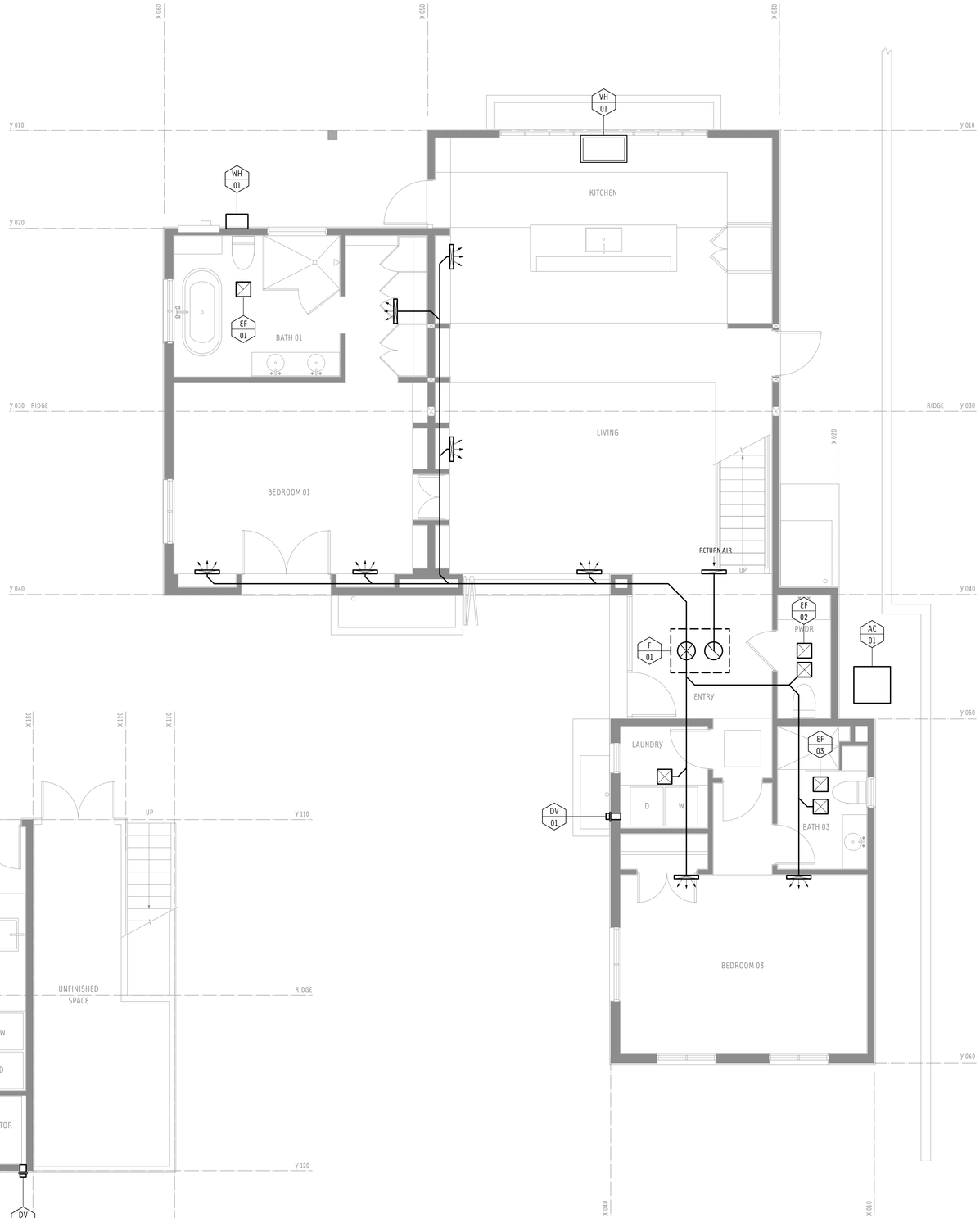

EQUIPMENT SCHEDULE

FURNACE

F 01 — YORK LATITUDE SERIES GAS FURNACE TGS MODEL
SINGLE -STAGE OPERATION, 40-130 Mbh input, 95.5%

AIR-CONDITIONING UNIT

AC 01 — YORK LX-SERIES AIR CONDITIONER MODEL YCS
14 SEER SINGLE-STAGE, 5 TON

MINI-SPLIT UNIT

MS 01 — YORK DUCT-FREE MINISPLIT SYSTEM
28 SEER SINGLE-ZONE SYSTEM, Z-SERIES

ON-DEMAND TANKLESS WATER HEATER

WH 01 — ON-DEMAND WATER HEATER
NAVIEN MODEL NO. NPE-240S

WH 02 — ON-DEMAND WATER HEATER
NAVIEN MODEL NO. NPE-210S

EXHAUST FANS

EF 01 — EXHAUST FAN - LOCAL VENTILATION EXHAUST REQUIREMENTS:
- EXHAUST FAN DELIEVER VENTILATION AIRFLOW AT 50 OR MORE CFM PER BATHROOM
- ALL CEILING MOUNTED INTERMITTENT LOCAL VENTILATION FANS HAVE A SOUND RATING OF THREE SONES OR LESS AT THE REQUIRED AIRFLOW RATE.

DRYER VENTS

DV 01 — DRYER VENT - LOCAL VENTING REQUIREMENTS:
- VENTED OUTSIDE
- EQUIPPED WITH BACK DRAFT DAMPER

COOKTOP VENT HOOD

VH 01 — VENT HOOD OVER COOKTOP - LOCAL EXHAUST REQUIREMENTS:
- EXHAUST RATE OF 100CFM MINIMUM FOR INTERMITTENT EXHAUST OR
- 5 AIR CHANGES PER HOUR IF CONTINUOUS

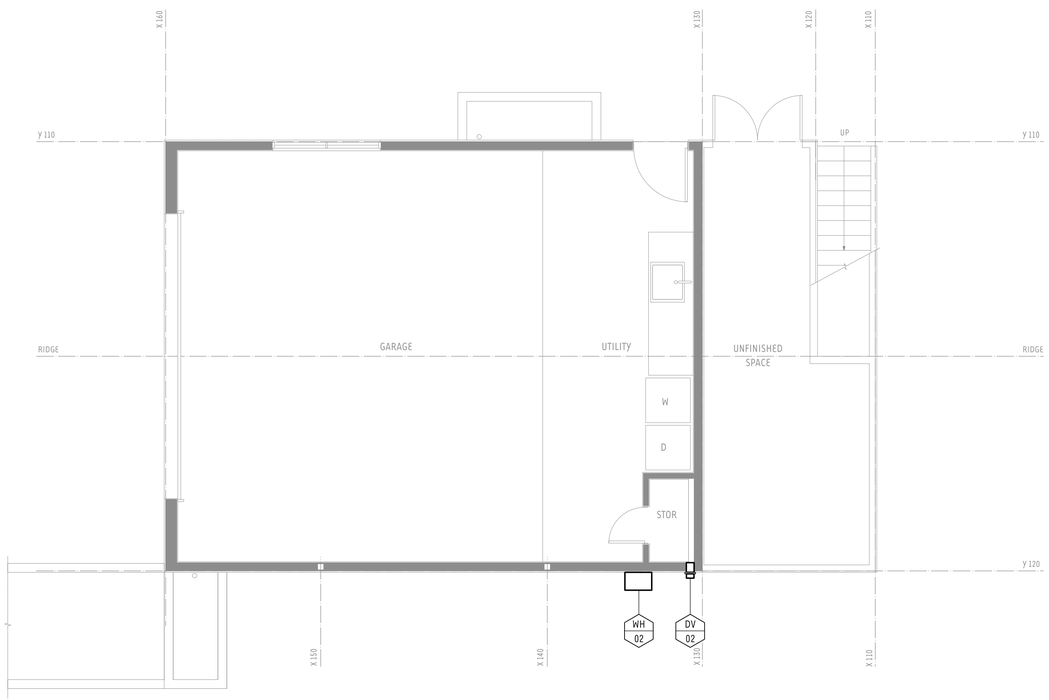

GARAGE - MECHANICAL FIRST LEVEL PLAN 02

SCALE : 1/4"= 1'-0"

MAIN RESIDENCE - MECHANICAL FIRST LEVEL PLAN 01

SCALE : 1/4"= 1'-0"

LEGEND

SYMBOL	DESCRIPTION
12x12 / 500	CEILING DIFFUSER, NECK SIZE, IN DIA. AIR QUALITY CFM
	SOLID LINE DENOTES NEW DUCTWORK
	SUPPLY AIR DUCT
	RETURN AIR DUCT
	EXHAUST AIR DUCT
	DOUBLE THICKNESS TURNING VANES
	CEILING DIFFUSER
	RETURN AIR GRILLE, RELIEF GRILLE
	EXHAUST GRILLE
12 x 6	DUCT (FIRST DIMENSION IS SIDE SHOWN)
12 x 6 (L)	LINED DUCT (FIRST DIMENSION IS SIDE SHOWN)
SD	DUCT SMOKE DETECTOR
S	SMOKE DETECTOR, 110 VOLT WITH BATTERY BACK-UP
T	THERMOSTAT (MOUNT AT +42" ABOVE FINISH FLOOR)
CO	CO2 SENSOR (FOR DEMAND CONTROL VENTILATION)
S.A.	SUPPLY AIR
R.A.	RETURN AIR
E.A.	EXHAUST AIR
O.S.A.	OUTSIDE AIR
C.D.	CEILING DIFFUSER
R.A.G. R.G.	RETURN AIR GRILLE, RELIEF GRILLE
E.G.	EXHAUST GRILLE

kras design studio

BLOCK RESIDENCE
1790 Sycamore Canyon Road
Santa Barbara, CA 93108

KRAS DESIGN STUDIO
116 E Yanonali Street, Unit A2
Santa Barbara, CA 93101
karl@krasdesignstudio.com

This document has been created by kras design studio, which retains all copyrights to the document. It may not be reproduced, distributed, displayed, modified or used by any other person for any purpose without the express written consent of the architect.

Revisions:

MECHANICAL MAIN LEVEL PLAN

M1.01

10.10.19

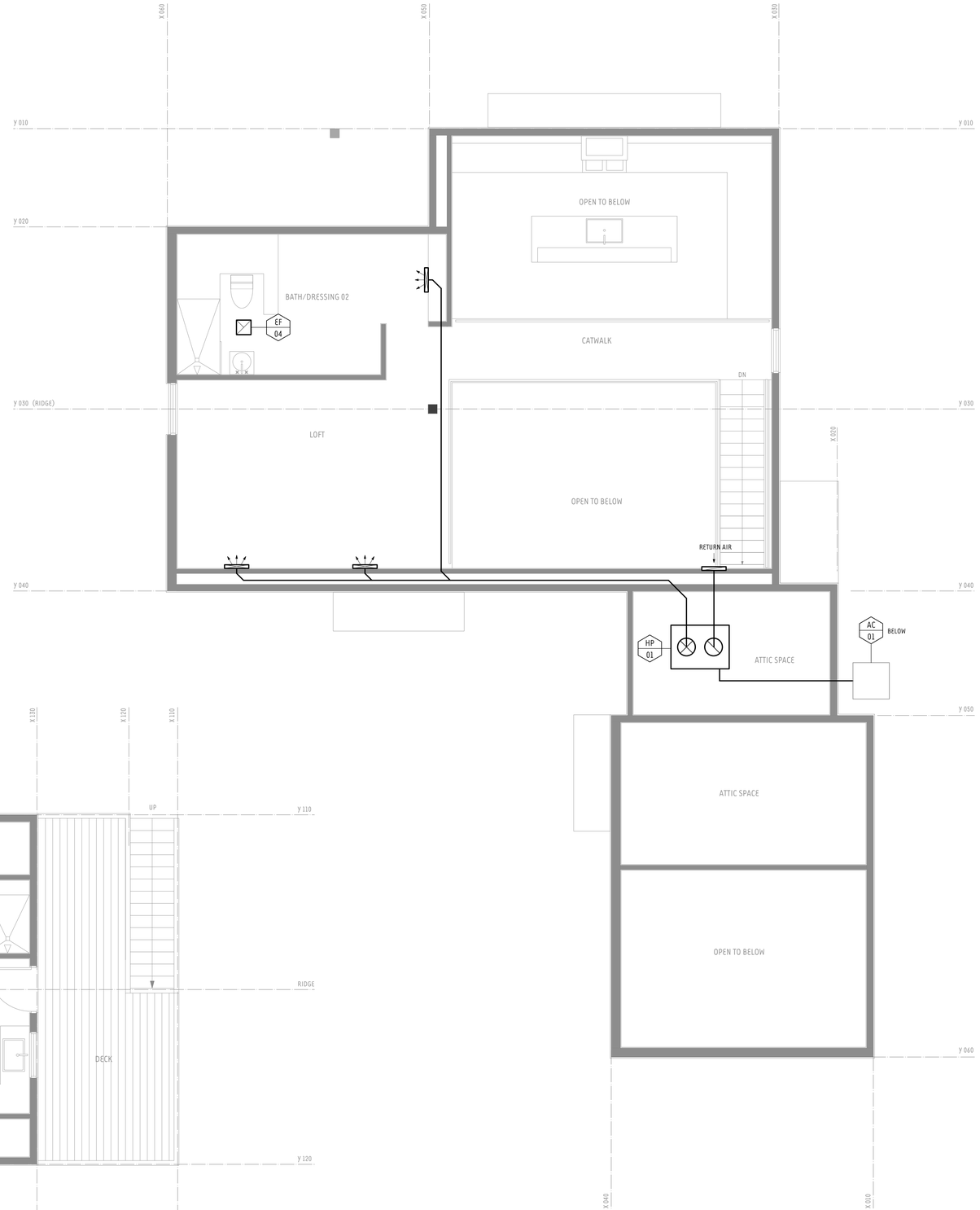

MAIN RESIDENCE - MECHANICAL FIRST LEVEL PLAN 01

SCALE : 1/4"= 1'-0"

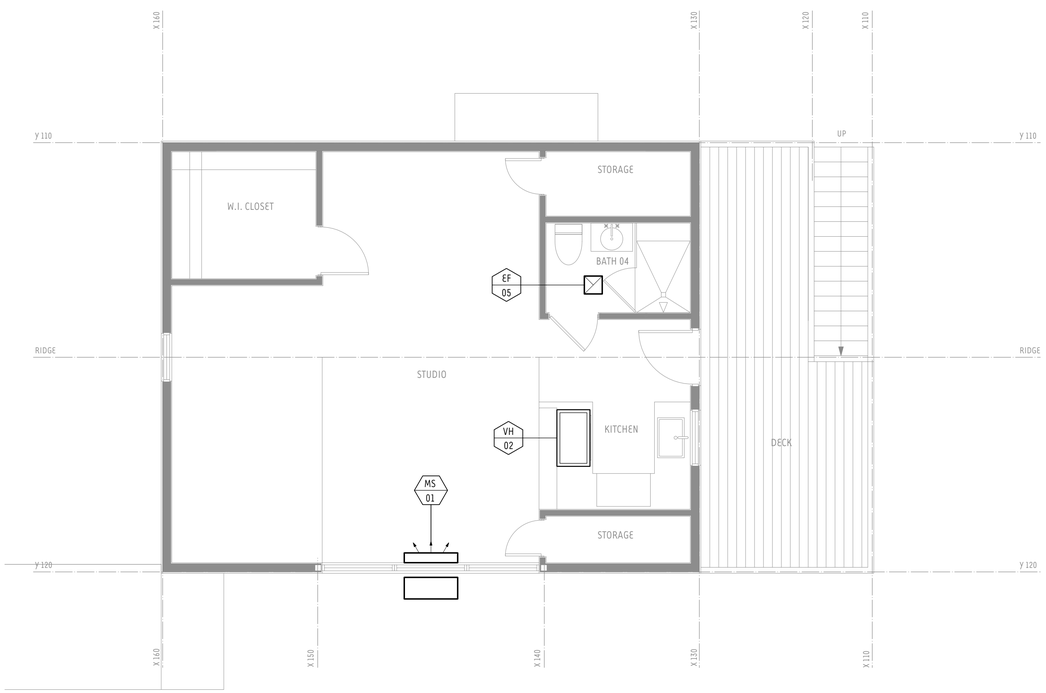

ADU - MECHANICAL SECOND LEVEL PLAN 02

SCALE : 1/4"= 1'-0"

EQUIPMENT SCHEDULE

FURNACE

F 01 — YORK LATITUDE SERIES GAS FURNACE TGS MODEL
SINGLE -STAGE OPERATION, 40-130 Mbh input, 95.5%

AIR-CONDITIONING UNIT

AC 01 — YORK LX-SERIES AIR CONDITIONER MODEL YCS
14 SEER SINGLE-STAGE, 5 TON

MINI-SPLIT UNIT

MS 01 — YORK DUCT-FREE MINISPLIT SYSTEM
28 SEER SINGLE-ZONE SYSTEM, Z-SERIES

ON-DEMAND TANKLESS WATER HEATER

WH 01 — ON-DEMAND WATER HEATER
NAVIEN MODEL NO. NPE-240S

WH 02 — ON-DEMAND WATER HEATER
NAVIEN MODEL NO. NPE-210S

EXHAUST FANS

EF 01 — EXHAUST FAN - LOCAL VENTILATION EXHAUST REQUIREMENTS:
- EXHAUST FAN DELIEVER VENTILATION AIRFLOW AT 50 OR MORE CFM PER BATHROOM
- ALL CEILING MOUNTED INTERMITTENT LOCAL VENTILATION FANS HAVE A SOUND RATING OF THREE SONES OR LESS AT THE REQUIRED AIRFLOW RATE.

DRYER VENTS

DV 01 — DRYER VENT - LOCAL VENTING REQUIREMENTS:
- VENTED OUTSIDE
- EQUIPPED WITH BACK DRAFT DAMPER

COOKTOP VENT HOOD

VH 01 — VENT HOOD OVER COOKTOP - LOCAL EXHAUST REQUIREMENTS:
- EXHAUST RATE OF 100CFM MINIMUM FOR INTERMITTENT EXHAUST OR
- 5 AIR CHANGES PER HOUR IF CONTINUOUS

LEGEND

SYMBOL	DESCRIPTION
12x12 / 500	CEILING DIFFUSER, NECK SIZE, IN DIA. AIR QUALITY CFM
	SOLID LINE DENOTES NEW DUCTWORK
	SUPPLY AIR DUCT
	RETURN AIR DUCT
	EXHAUST AIR DUCT
	DOUBLE THICKNESS TURNING VANES
	CEILING DIFFUSER
	RETURN AIR GRILLE, RELIEF GRILLE
	EXHAUST GRILLE
12 x 6	DUCT (FIRST DIMENSION IS SIDE SHOWN)
12 x 6 (L)	LINED DUCT (FIRST DIMENSION IS SIDE SHOWN)
SD	DUCT SMOKE DETECTOR
S	SMOKE DETECTOR, 110 VOLT WITH BATTERY BACK-UP
T	THERMOSTAT (MOUNT AT +42" ABOVE FINISH FLOOR)
CO	CO2 SENSOR (FOR DEMAND CONTROL VENTILATION)
S.A.	SUPPLY AIR
R.A.	RETURN AIR
E.A.	EXHAUST AIR
O.S.A.	OUTSIDE AIR
C.D.	CEILING DIFFUSER
R.A.G. R.G.	RETURN AIR GRILLE, RELIEF GRILLE
E.G.	EXHAUST GRILLE

kras design studio

BLOCK RESIDENCE
1790 Sycamore Canyon Road
Santa Barbara, CA 93108

KRAS DESIGN STUDIO
116 E Yanonali Street, Unit A2
Santa Barbara, CA 93101
karl@krasdesignstudio.com

This document has been created by kras design studio, which retains all copyrights to the document. It may not be reproduced, distributed, displayed, modified or used by any other person for any purpose without the express written consent of the architect.

Revisions:

MECHANICAL SECOND LEVEL PLAN

M1.02

10.10.19

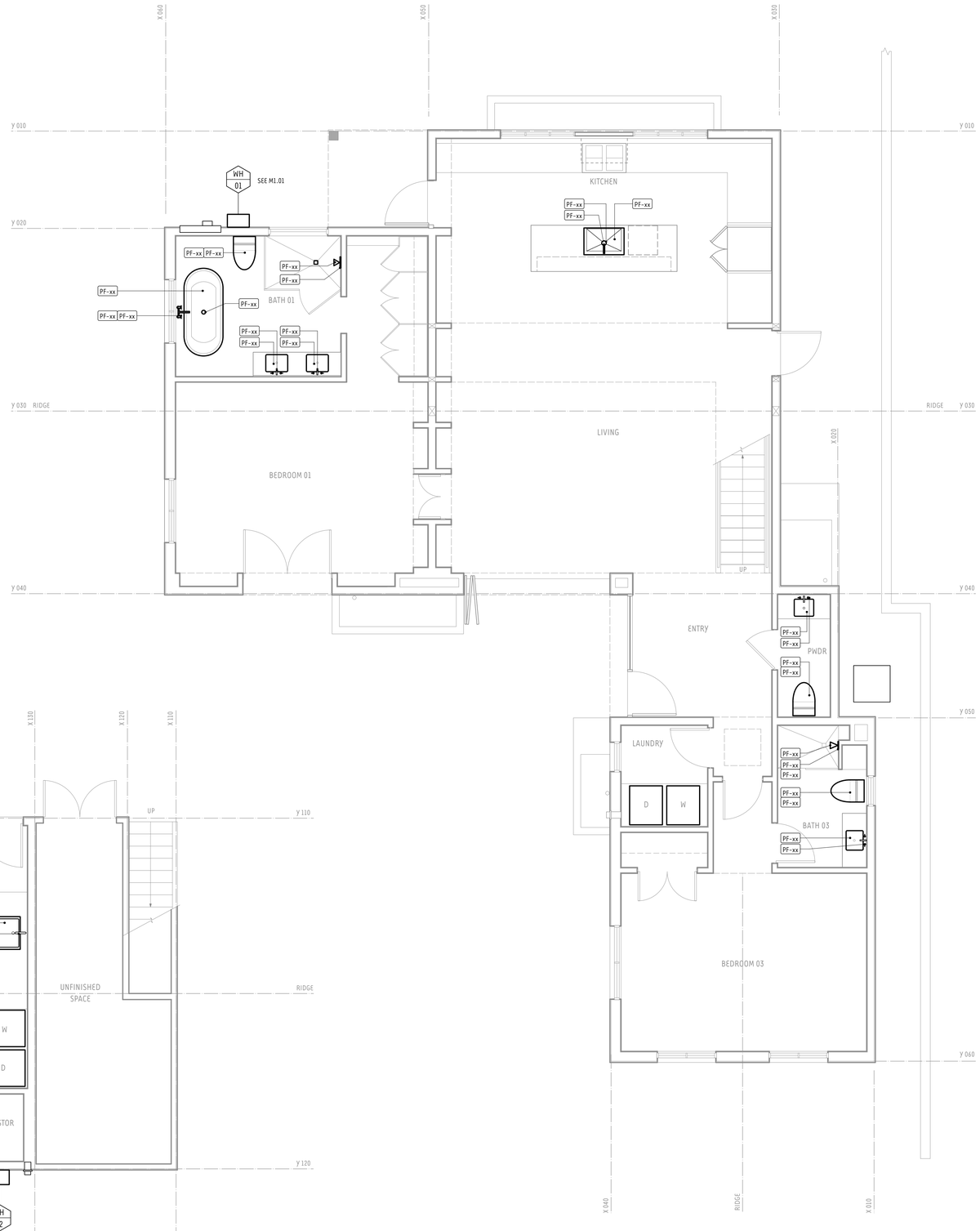

MAIN RESIDENCE - FIRST LEVEL PLUMBING & FIXTURE PLAN 01

SCALE : 1/4" = 1'-0"

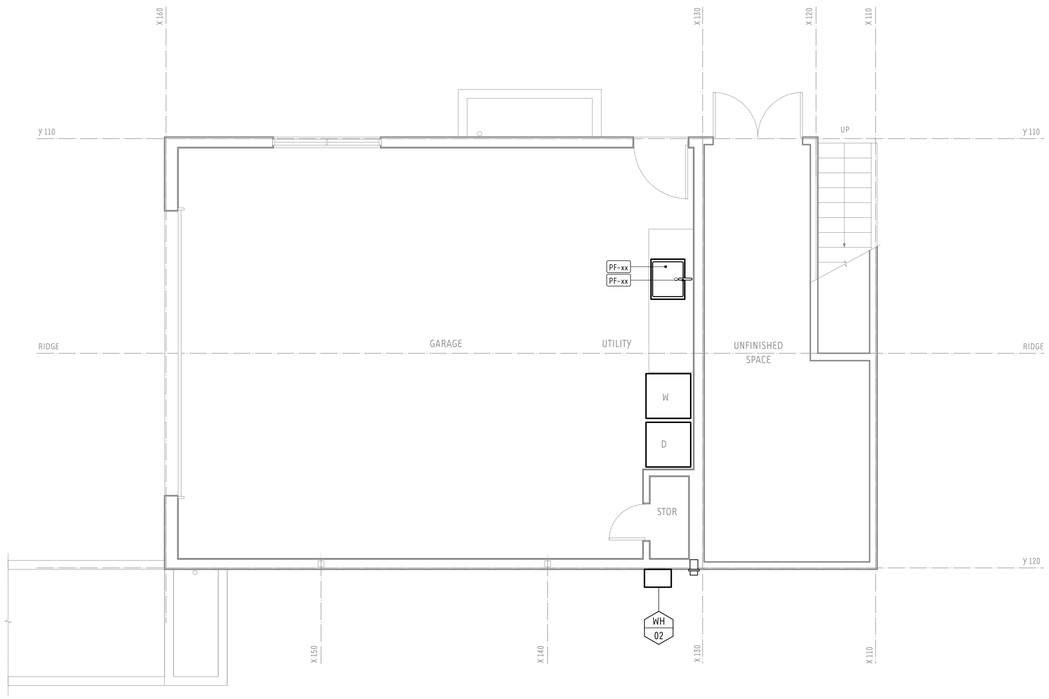

GARAGE - FIRST LEVEL PLUMBING & FIXTURE PLAN 02

SCALE : 1/4" = 1'-0"

N

kras design studio

BLOCK RESIDENCE

1790 Sycamore Canyon Road
Santa Barbara, CA 93108

KRAS DESIGN STUDIO
116 E Yanonali Street, Unit A2
Santa Barbara, CA 93101
karl@krasdesignstudio.com

This document has been created by kras design studio, which retains all copyrights to the document. It may not be reproduced, distributed, displayed, modified or used by any other person for any purpose without the express written consent of the architect.

Revisions:

PLUMBING & FIXTURE PLAN

P1.01

10.10.19

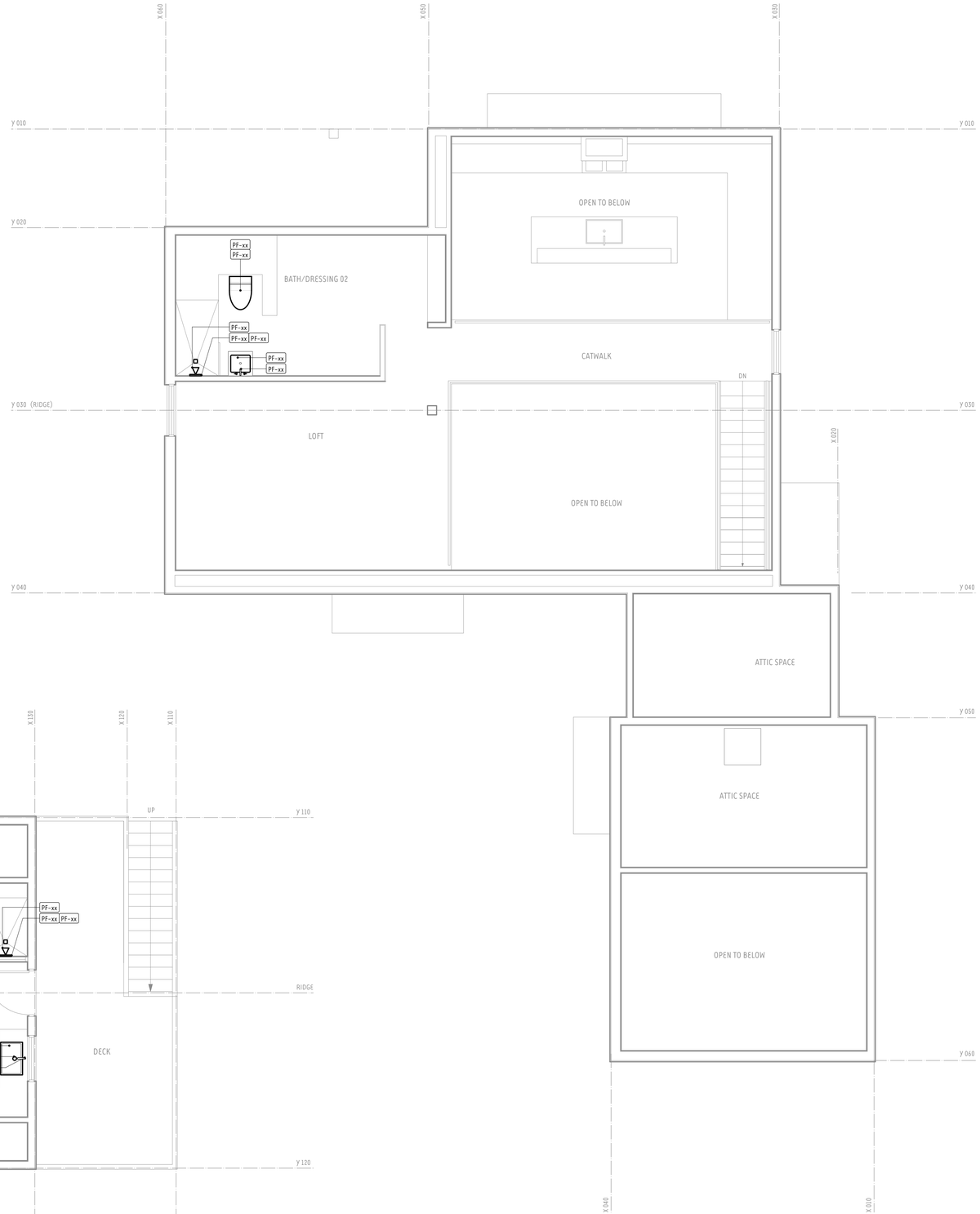

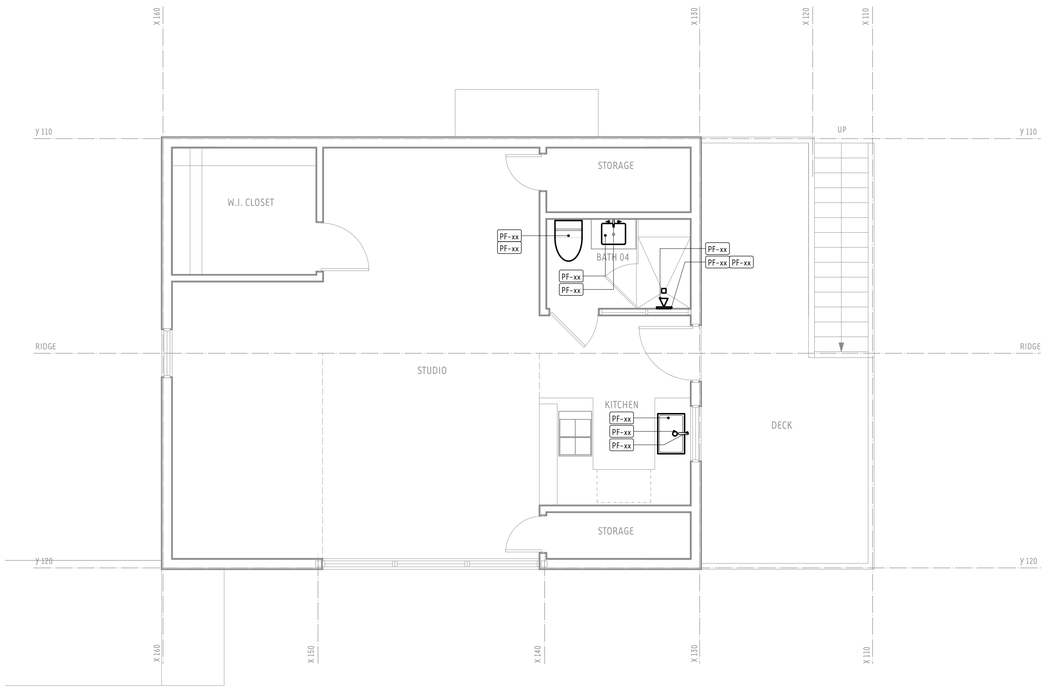

ADU - SECOND LEVEL PLUMBING & FIXTURE PLAN **02**

SCALE : 1/4"= 1'-0"

N

MAIN RESIDENCE - SECOND LEVEL PLUMBING & FIXTURE PLAN **01**

SCALE : 1/4"= 1'-0"

kras design studio

BLOCK RESIDENCE

1790 Sycamore Canyon Road
Santa Barbara, CA 93108

KRAS DESIGN STUDIO
116 E Yanonali Street, Unit A2
Santa Barbara, CA 93101
karl@krasdesignstudio.com

This document has been created by kras design studio, which retains all copyrights to the document. It may not be reproduced, distributed, displayed, modified or used by any other person for any purpose without the express written consent of the architect.

Revisions:

PLUMBING & FIXTURE PLAN

P1.02

10.10.19

Block Residence

1790 Sycamore Canyon Road
Santa Barbara, CA 93108

STANDARD DETAILS

9 TYPICAL NOTCHING & BORING

PENETRATIONS IN TOP PLATES & SILL PLATES

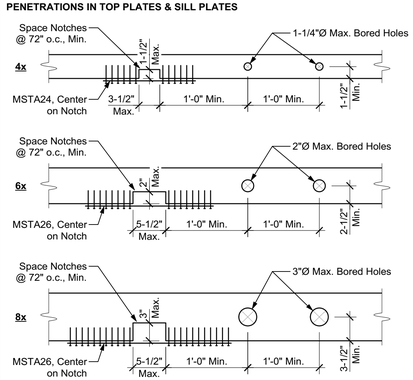

NOTCHING LIMITS FOR WOOD STUDS

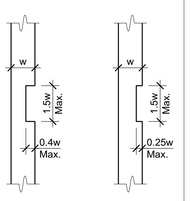

BORING LIMITS FOR WOOD STUDS

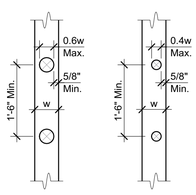

6 TYPICAL FLOOR / ROOF NAILING

Nailing per Plan w/ Spcg. Denoted as **@ A", B", C"**
A = Boundary Nailing
B = Edge Nailing
C = Field

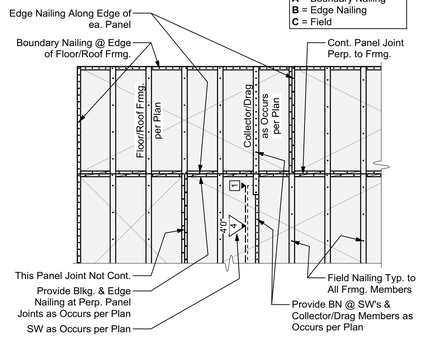

4 TYPICAL CONCRETE SLAB JOINTS

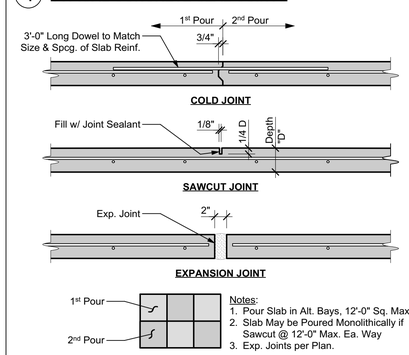

Notes:
1. Pour Slab in Alt. Bays, 12'-0" Sq. Max.
2. Slab May be Poured Monolithically if Sawcut @ 12'-0" Max. Ea. Way
3. Exp. Joints per Plan.

1 TYPICAL REINFORCING BAR BENDS

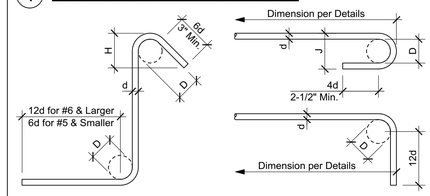

STANDARD TIES & STIRRUPS

Bar Size	D	H (Approx.)
#3	1-1/2"	3"
#4	2"	3"
#5	2-1/2"	3-3/4"
#6	4-1/2"	4-1/2"
#7	5-1/4"	5-1/4"
#8	6"	6"

STANDARD END HOOKS

Bar Size	D	J
#3	2-1/4"	3"
#4	3"	4"
#5	3-3/4"	5"
#6	4-1/2"	6"
#7	5-1/4"	7"
#8	6"	8"

Note:
All Bar Bend Diameters & End Lengths Must Conform to the CRSI Manual of Standard Practice

7 TYPICAL 2x TOP PLATE SPLICE

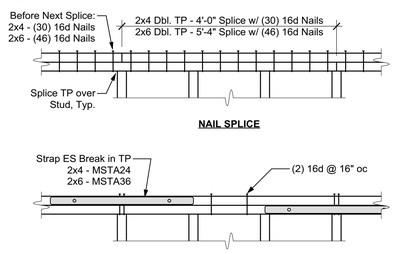

5 TYP. PENETRATION THROUGH FOUNDATION

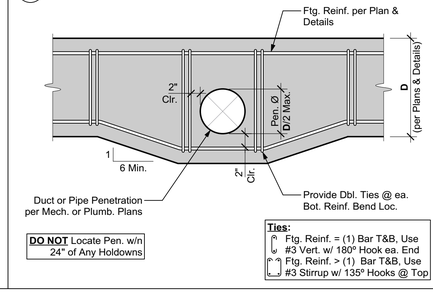

DO NOT Locate Pen. w/n 24" of Any Holdowns

Ties:
Ftg. Reinf. = (1) Bar T&B, Use #3 Vert. w/ 180° Hook ea. End
Ftg. Reinf. > (1) Bar T&B, Use #3 Stirrup w/ 135° Hooks @ Top

2 STD. DEVELOPMENT LENGTHS & LAP SPLICES

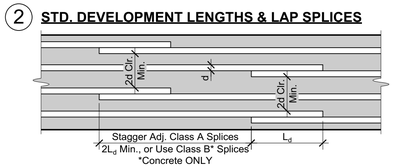

CONCRETE			
Bar Size	Length of Lap, L_d Class A	Length of Lap, L_d Class B	Embed. of Hook, L_{dh}
#3	16"	21"	7"
#4	22"	28"	9"
#5	27"	35"	11"
#6	32"	42"	14"
#7	38"	49"	16"
#8	43"	56"	18"

MASONRY		
Bar Size	Length of Lap, L_d	Embed. of Hook, L_{dh}
#3	15"	5"
#4	26"	7"
#5	40"	9"
#6	74"	10"
#7	101"	12"
#8	131"	13"

TYPICAL SHEAR WALL FRAMING NOTES:

1. Single sided shear walls may be placed on EITHER side of the framed wall.
2. Sill plates on masonry or concrete to be pressure treated per Timber / Lumber specifications. Sill plate thickness per SW Sched.
3. Wall studs and blkg. are required at all adjoining panel edges. Thickness of wall studs and blkg. at panel edges per SW Sched.
4. Where plywood is applied on both faces of a wall, edge nails shall be staggered on adjacent panel edges OR panel joints shall be offset to fall on different framing members. Plywood joint and sill plate nailing shall be staggered in all cases.
5. Plywood panels shall butt along centerlines of framing members. Minimum plywood dimension for shearwall shall be 12".
6. Nails shall be located at least 3/8" from all panel edges.
7. The use of pnuematic nail guns for shear wall nailing is subject to continued satisfactory jobsite performance and subject to the review and approval by the Engineer of Record and/or Building Inspector. If the nail heads penetrate the outer ply more than would be normal for a hand held hammer, or if the minimum edge distances are not maintained, the performance will be deemed as unsatisfactory and the continued use of pneumatic nail for shear wall nailing will not be permitted.
8. At all bearing walls (both exterior and interior walls) not noted as shear walls, continuous full depth blocking shall be provided between joists and rafters with LTP4 or A35 to top plates @ 32" oc at floors and 48" oc at roofs, unless noted otherwise per plan.
9. Refer to material specifications for additional framing requirements.

SHEAR WALL LEGEND

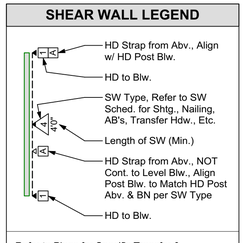

Refer to Plans for Specific Transfer & Connection Detail at each Shear Wall Location

10 TYPICAL SHEAR WALL INTERSECTIONS

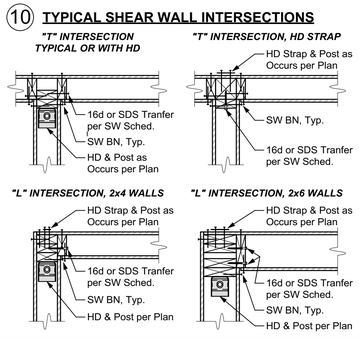

8 TYPICAL SHEAR WALL FRAMING

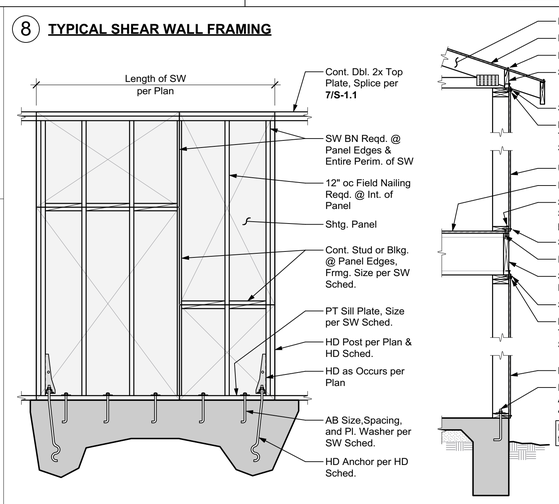

3 TYPICAL WOOD FRAMED OPENING

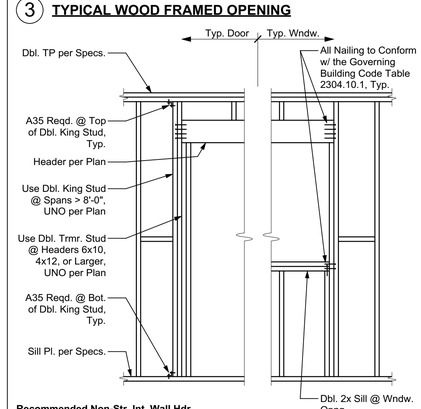

Recommended Non-Str. Int. Wall Hdr.

Span	2x4 Wall	2x6 Wall
< 4'-0"	Dbl. 2x4 Flat	Dbl. 2x6 Flat
< 6'-0"	4x4	4x6 Flat
< 8'-0"	4x6	6x6
> 8'-0"	Span in Feet Equals Beam Depth in Inches	

ABBREVIATIONS

AB	Anchor Bolt	Mas.	Masonry
A&B	Above and Below	Max.	Maximum
Abv.	Above	MB	Machine Bolt
Adn.	Addition (al)	MF	Moment Frame
Adj.	Adjacent, Adjustable	Mfr.	Manufacture(r)
Alt.	Alternate (ive)	Min.	Minimum, Minute
Appd.	Approved	Mod.	Modif(y), (ication)
Arch.	Architect(ural)	Mtl.	Metal
Avg.	Average	(N)	New
Bdry.	Boundary	N/A	Not Applicable
Bldg.	Building	Nat.	Natural
Blk(g).	Block (ing)	NTS	Not to Scale
Bm.	Beam	o/	Over
BN	Boundary Nailing	oc	On Center
B-O	Bottom of	OD	Outside Diameter
BO	By Others	Opng.	Opening
Bot.	Bottom	Opp.	Opposite
Brg.	Bearing	Opt.	Optional
Btwn.	Between	Para.	Parallel
BW	Both Ways	PCF	Lbs per Cubic Ft.
Cant.	Cantilever(ed)	Pen.	Penetrate, (tion)
CIP	Cast in Place	Perf.	Perforated
CJ	Ceiling Joist	Perim.	Perimeter
CJP	Complete Joint Penetration	Perp.	Perpendicular
		Pl	Panel Index
CL	Center Line	PJP	Partial Joint Pen.
Clg.	Ceiling	PL	Plate
CMU	Conc. Masonry Unit	PLF	Lbs per Linear Ft.
Col.	Column	Pl.	Plate
Com.	Common	Ply.	Plywood
Comp.	Component	Prep.	Prepare, (tion)
Conc.	Concrete	Press.	Pressure
Conn.	Connection	Proj.	Project
Const.	Construction	Prop.	Property
Cont.	Continue (ous)	PSF	Lbs per Square Ft.
Ctr.	Center	PSI	Lbs per Square In.
d	Penny	PT	Pressure-Treated
Dbl.	Double	R	Radius
Defl.	Deflection	Rec(s).	Recommendation(s)
Deg.	Degree	Rect.	Rectangular
Demo.	Demolish (tion)	Ref.	Reference
Dep.	Depress(ed)	Reinf.	Reinforce(d), (ment), (ing)
DF	Douglas Fir		
Dia.	Diameter	Req(d).	Require(d)
Diaph.	Diaphragm	Reqs.	Requirements
Dif.	Different	Ret.	Retain(ing)
Dim.	Dimension	RJ	Roof Joist
Dist.	Distance	RR	Roof Rafter
DJ	Deck Joist	RW	Redwood
DL	Dead Load	SAD	See Arch Dwg's
Dwg.	Drawing	Sched.	Schedule
(E)	Existing	Sgl.	Single
Ea.	Each	Shtg.	Sheathing
EF	Each Face	Sim.	Similar
EFP	Equivalent Fluid Pressure	SIP	Str. Insulated Panel
		SM	Sheet Metal
Elev.	Elevator, Elevation	SMS	Sheet Metal Screw
Embed.	Embed(ed), (ment)	SOG	Slab on Grade
Engr.	Engineer	Spec.	Specif(ied), (cations)
EOR	Engineer of Record	Std.	Standard
Eq.	Equal, Equivalent	Stl.	Steel
ES	Each Side	Struc.	Structure, (al)
EW	Each Way	SW	Shear Wall
Exp.	Expand, Expansion	Sym.	Symmet(ry), (rical)
Ext.	Exterior	T&B	Top and Bottom
Fdn.	Foundation	T&G	Tongue and Groove
FF	Finished Floor	Temp.	Temporary
FJ	Floor Joist	Thk.	Thick(ness)
Flr(g).	Floor (ing)	Thru	Through
FOC	Face of Concrete	TN	Toe-Nail
FOM	Face of Masonry	TP	Top Plate
FOS	Face of Studs	T-O	Top of
FOW	Face of Wall	TOB	Top of Beam
Frmg.	Framing	TOC	Top of Concrete
Ft.	Foot, Feet	TOG	Top of Grade
Ftg.	Footing	TOM	Top of Masonry
Ga.	Gage, Gauge	TOS	Top of Steel
Galv.	Galvanized	TOW	Top of Wall
GB	Grade Beam	TRU	To Remain Unchanged
GC	General Contractor		
Gyp.	Gypsum	Trmr.	Trimmer Stud
Hldn.	Holdown	Typ.	Typical
Hdr.	Header	UNO	Unless Noted Otherwise
Hdw.	Hardware		
Hgr.	Hanger	Vert.	Vertical
Hor(iz).	Horizontal	VIF	Verify in Field
Ht.	Height	VWA	Verify with Arch
ID	Inside Diameter	w/	With
In.	Inch(es)	w/n	Within
Insp.	Inspect(ion)	w/o	Without
Int.	Interior	WS	Wood Screw
Inv.	Invert, Inverted	Wndw.	Window
Jst.	Joist	Wt.	Weight
K	Kips (1,000 pounds)	WWF	Welded Wire Fabric
KLF	Kips per Linear Ft.	Yd.	Yard
King	King Stud		
KP	King Post	@	At
KSF	Kips per Square Ft.	°	Degrees
KSI	Kips per Square In.	>	Greater Than
Lb(s).	Pound(s)	<	Less Than
LL	Live Load	#	Number, Pound(s)
Loc.	Location	/	Per
LW	Light Weight	%	Percent(age)
		±	Plus or Minus

PROJECT INFORMATION

ARCHITECT / DESIGNER:
Kras Design Studio
116 E Yanonali Street, Unit A2
Santa Barbara, CA 93101
(805) 451-3172

SOILS/GEO. ENGINEER:
Braun & Associates, Inc.
P.O. Box 2004
Buellton, CA 93427
(805) 688-5429

Client:
Kara Block
Sycamorebuilt, LLC
P.O. Box 90305
Santa Barbara, CA 93190

DESIGN PARAMETERS

GENERAL PARAMETERS

Building Code	2016 CBC *
Roof Loads	
Dead Loads (DL)	12 psf
Live Loads (LL)	20 psf
Floor Loads - Typ.	
Dead Loads (DL)	15 psf
Live Loads (LL)	40 psf
Floor Loads - Deck	
Dead Loads (DL)	12 psf
Live Loads (LL)	60 psf

SOILS VALUES (per Soils Report)

Bearing Pressure	1500 psf
Skin Friction	500 psf
Lateral Passive Pressure	450 psf (Max. 5000 psf)

WIND DESIGN BASIS

Ultimate Wind Speed, V_{ULT}	110 mph
Nominal Wind Speed, V_{ASD}	85 mph
Risk Category	II
Exposure	B
Importance Factor, I_w	1.00
Int. Press. Coefficient, GC_{pi}	±0.18
Comp. & Cladding Press.	16.00 psf

SEISMIC DESIGN BASIS

Seismic Design Category	E
Site Class	D
Seismic Factors	
S_S / S_1	2.839 / 1.000
S_{DS} / S_{D1}	1.893 / 1.000
Risk Category	II
Importance Factor, I_e	1.00
Resisting System:	Wood Shear Walls
Response Mod. Coefficient, R	6.5
Design Base Shear	V = 0.2912W
Analysis Procedure:	Eqv. Lateral Force (ASCE 7-10, T. 12.6-1)

* The 2016 California Building Code (CBC), based on the 2015 International Building Code (IBC), is the governing code in the State of California.

SHEET INDEX

S-1.1	Structural Title Sheet
S-1.2	Structural Specifications
S-1.3	Special Inspections
S-2.1	Foundation Plan
S-2.2	Floor Framing Plan
S-2.3	Roof Framing Plan
S-2.4	Garage Foundation Plan
S-2.5	Garage Floor Framing Plan
S-2.6	Garage Roof Framing Plan
S-3.1	Structural Details
S-3.2	Structural Details
S-3.3	Structural Details

Ashley&Vance ENGINEERING, INC.
210 East Cota Street
Santa Barbara, CA 93101
(805) 962-9966
www.ashleyvance.com
CIVIL • STRUCTURAL

The use of these plans and specifications shall be restricted to the original site for which they were prepared and publication thereof is expressly limited to such use. Reproduction or publication by any method, in whole or in part, is prohibited. Title to these plans and specifications remain with Ashley & Vance Engineering, Inc. without prejudice. Visual contact with these plans and specifications shall constitute prima facie evidence of the acceptance of these restrictions.

Engineer of Record:

REGISTERED PROFESSIONAL ENGINEER CRAIG W. PRUETT C 77909 CIVIL STATE OF CALIFORNIA
PLAN REVIEW SET NOT FOR CONSTRUCTION

Block Residence
1790 Sycamore Canyon Road
Santa Barbara, CA 93108

Revision:

Proj. Engr.: R. Gabriel Phone Ext.: 131
Proj. Mngr.: C. Pruett
Date: 9 Oct. 2019 Scale: NTS
A&V Job No.: 181380

STRUCTURAL TITLE SHEET

S-1.1

DO NOT SCALE THESE DRAWINGS. Refer to Architectural plans for all dimensions.

Oct 9, 2019
2:21:00 PM

GENERAL NOTES

1. The following notes, details, schedules & specifications shall apply to all phases of this project unless specifically noted otherwise. Notes and details on the structural plans shall take precedence over general notes and typical details. Where no details are given, construction shall be as shown for similar work.
2. All drawings are considered to be part of the contract documents. The Contractor shall be responsible for the review and coordination of all drawings and specifications prior to the start of construction. Any discrepancies shall be brought to the attention of the Engineer prior to the start of construction so that a clarification can be issued. Any work performed in conflict with the contract documents or any applicable code requirements shall be corrected by the Contractor at no expense to the Owner or Engineer.
3. All information on existing conditions shown on the structural plans are based on best present knowledge available, but without guarantee of accuracy. The Contractor shall be responsible for the verifications of all dimension and conditions at the site. Any discrepancies between actual site conditions and information shown on the drawings or in the specifications shall be brought to the attention of the EOR prior to the start of construction.
4. Refer to the Architectural plans for the following:
   - (a) Dimensions
   - (b) Size and location of all interior and exterior wall locations.
   - (c) Size and location of all floor, roof and wall openings
   - (d) Size and location of all drains, slopes, depressions, steps, etc.
   - (e) Specification of all finishes & waterproofing
   - (f) All other non-structural elements
5. Refer to the mechanical, electrical and plumbing plans for the following:
   - (a) Size and location of all equipment
   - (b) Pipe runs, sleeves, hangers and trenches
   - (c) All other mechanical, electrical or plumbing related elements
6. **DO NOT** scale structural plans. Contractor shall use all written dimensions on Architectural plans.
7. Construction materials shall be uniformly spread out if placed on floor or roof so as to not overload the framing. Load shall not exceed the design live load per square foot. It is the Contractor's responsibility to provide adequate shoring and/or bracing as required.
8. Specifications and detailing of all waterproofing and drainage items, while sometimes shown on the structural plans for general information purposes only, are solely the design responsibility of others.
9. The Engineer will not be responsible for and will not have control or charge of construction means, methods, techniques, sequences or procedures, or for safety precautions and programs in connection with the construction delineated by these plans. It should be understood that the Contractor or his/her agent(s) shall supervise and direct all work and shall be solely and completely responsible for all construction means, methods, techniques, sequences, procedures and conditions on the job site, including safety of all persons and property during the entire period of construction. Periodic observations by the Engineer, his staff or representatives are not intended to include verification of dimensions or review the adequacy of the Contractor's safety measures on or near the construction site.
10. Modifications of the plans, notes, details and specifications shall not be permitted without prior approval from the Engineer.
11. All workmanship shall conform to the best practice prevailing in the various trades performing the work. The Contractor shall be responsible for coordinating the work of all trades.
12. It is the Contractor's responsibility to ensure that only approved structural plans are used during the course of construction. The use of unapproved documents shall be at the contractor's own risk. Corrections of all work based on such documents shall be performed at the Contractor's expense.
13. These plans and specifications represent the structural design only. No information nor warranty is provided for the work of any other Consultant (Architect, Mechanical, Electrical, etc.). This includes, but is not limited to, waterproofing, drainage, ventilation, accessibility, or dimensions.

STRUCTURAL STEEL.

1. All structural steel and connections shall be fabricated and erected in accordance with AISC specifications, Seismic Provisions Supplements No. 1 and 2, and Code of Standard Practice as amended to date.
2. Steel fabrication shop drawings shall be submitted for review by the Architect and Engineer prior to fabrication.
3. Special Inspection: Continuous special inspection of structural welding is required by an inspector pre-qualified by the Building Department. The following exceptions arepermitted for welds not in Special Moment-Resisting Frames:
   - (a) Welding performed in an approved fabricator's shop in accordance with latest edition of the the Governing Building Code, Section 1704.2.
   - (b) The inspector need not be continuously present during welding of the following items, provided the materials, welding procedures, and welders qualifications are verified prior to the start of work; Periodic inspections are made of work in progress; and visual inspection of all completed welds is made prior to shipment:
     - i. Single-pass fillet welds not exceeding 5/16"
     - ii. Floor and roof steel deck welding
     - iii. Welded studs (for nailers, diaphragms or composite deck systems)
     - iv. Welded light gauge cold-formed framing members (studs, joists, etc.)
     - v. Welding of stairs and railing systems
4. Testing Procedures: All complete joint penetration welds (aka full penetration, FP, or CJP) groove or butt welded joints and splices in Special Moment-Resisting Frames shall be tested 100 percent in accordance with AISC Seismic Part I, Section 16 by either ultrasonic testing ("UT") or radiography (x-ray). The following exceptions are permitted:
   - (a) Ultrasonic or radiographic testing is not required for all complete joint penetration welds on material less than 5/16" thick; continuous visual inspection is required.
   - (b) At the discretion of the Building Official, the ultrasonic or radiographic testing rate for an individual welder may be reduced to 25% provided the reject rate is no more than 5% for all welds tested for that individual welder.
   - (c) At the discretion of the Building Official, the ultrasonic or radiographic testing may be performed in the shop of an approved fabricator by a qualified inspector of their employ.
   - (d) It is the responsibility of the Contractor to verify all the testing requirements of the local Building Department as the requirements vary with each governing agency. The testing procedures outlined above apply on to those complete joint penetration welds specified in Special Moment-Resisting Frames only; Ordinary Moment-Resisting Frames are exempt.
5. Materials:
   - (a) Wideflange (W) sections shall conform to ASTM A992 except in moment frames.
   - (c) Hollow Steel Sections sections (HSS) shall conform to ASTM A500 Gr. B.
   - (d) Pipe sections shall be welded seamless pipe conforming to ASTM A53 Gr. B.
     - i. STD indicates Standard Wall
     - ii. EXT indicates Extra Strong
     - iii. DBL indicates Double Extra Strong
   - (e) All other material(plate, bars, etc.) shall conform to ASTM A36, UNO specifically.
   - (f) All plate material specified in steel moment frame connections shall conform to ASTM A572 Gr. 50 or ASTM A992.
6. Bolts:
   - (a) All bolts shall be ASTM A307 Gr. A, UNO specifically on the structural plans.
   - (b) High strength bolts complying with ASTM A325 and A490, when specified, shall require special inspection in accordance with the Governing Building Code, Section 1704.3.3.
   - (c) Threaded rod, where specified, shall conform with ASTM A307 unless specifically noted otherwise on the structural plans.
   - (d) Bolt holes shall be drilled 1/32" to 1/16" larger than the specified bolt diameter.
7. Welding:
   - (a) All welding shall be performed using SMAW, GMAW or FCAW processes.
   - (b) All welded connections to be in accordance with the latest edition of the AWS D1.1.
   - (c) All welding shall be performed by certified welders.
   - (d) All welding shall be performed with E70XX electrodes with a minimum CVN toughness of 20 ft-lb at -20ºF.
   - (e) Weld lengths specified on the plans are the net effective length required. Where fillet weld symbol is given without indication of size, use the minimum size welds as specified in section 1.17.2 of the AISC Manual of Steel Construction 9th Ed.
   - (f) No field welding shall be permitted, UNO specifically on the plans or details.
8. No holes other than those specifically detailed shall be allowed through structural steel members. Burning or torching of holes is not permitted under any circumstances.
9. All structural steel shall be painted one shop coat and touched-up in the field with read lead (or approved zinc chromate primer) as necessary.
10. Any steel member interfacing with wood framing shall have 1/2" diameter studs welded at 24" oc for attachment of wood nailers. Thru-bolting of nailers shall not be permittedunless specifically noted on the plans or details.
11. Provide hot dip galvanizing or 3" min. concrete cover around all structural steel below grade.

CONCRETE

1. All concrete shall have:
   - (a) an ultimate compressive strength (f'c) of 3,000 psi at 28 days (UNO).
   - (b) a maximum slump of 5" at point of placement.
   - (c) a W/C ratio of 0.55 or less for all slabs, walls, and columns, and 0.60 or less for all foundations.
   - (d) a normal dry-weight density (UNO).
2. Special inspection is required. Special inspection services shall conform to the Governing Building Code, Chapter 17 and shall be provided by an ICC certified inspector or Building Department approved engineer. The Building Department reserves the right to waive or require the special inspection requirements [Section 1704.1 and 1704.4] . Nothing in these plans waives the Building Department's right to require special inspection at any point and on any material.
3. Testing of materials used in concrete construction must be performed as noted on structural plans or at the request of the Building Department to determine if materials are quality specified. Tests of materials and of concrete shall be made by an approved agency and at the expense of the contractor; such tests shall be made in accordance with the standards listed in the Governing Building Code, Table 1704.4. When testing of concrete is required, four (4) test cylinders shall be taken from each 150 yards, or fraction thereof, poured in any one day. One (1) cylinder shall be tested at seven (7) days; two (2) at 28 days; one (1) shall be held in reserve. If Contractor elects to have additional tests performed for "early-break" results, additional test cylinders must be taken. At no time shall the Contractor instruct the testing agency to perform tests on a schedule different than above without the prior authorization of the Engineer. Contractor is responsible for complying with applicable testing requirements of theBuilding Department. Copies of all test reports shall be provided to Engineer and Building Department for review in a timely manner.
4. The Contractor shall remove and replace any concrete which fails to attain specified 28 day compressive strength if so directed by the Engineer. Any defects in the hardened concrete shall be repaired to the satisfaction of the Engineer and/or Architect or the hardened concrete shall be replaced at the Contractor's expense.
5. All concrete work shall conform with the Governing Building Code, Chapter 19.
6. All cement shall be Portland Cement Type I or II and shall conform to ASTM C 150.
7. All aggregates shall conform to ASTM C33. Maximum aggregate sizes:
   - (a) Footings: 1-1/2"
   - (b) All other work: 3/4"
8. Where not specifically detailed, the minimum concrete cover on reinforcing steel shall be:
   - (a) Permanently exposed to earth or weather
     - i. Cast against earth: 3"
     - ii. Cast against forms: 2"
   - (b) Not exposed to earth or weather
     - i. Slabs, walls, joists: 3/4"
     - ii. Beams, girders, columns: 1-1/2"
9. The minimum lap splice length for all reinforcing steel shall be as noted in the typical details on sheet S-1.1. All lap splices to be staggered.
10. All reinforcing steel, anchor bolts, dowels, inserts, and any other hardware to be cast in concrete shall be well secured in position prior to foundation inspection. All hardware to be installed in accordance with respective manufacturer's specifications. Refer to architectural and structural plans for locations of embedded items.
11. Locations of all construction joints, other than specified on the structural plans, shall be approved by the Architect and Engineer prior to forming. Construction joints shall be thoroughly air and water cleaned and heavily roughened so as to expose coarse aggregates. All surfaces to receive fresh concrete shall be maintained continuously wet at least three (3) hours in advance of concrete placement. Unless specifically detailed or otherwise noted, construction and control joints shall be provided in all concrete slabs-on-grade. Joints shall be located such that the area does not exceed 400 sq. feet.
12. The Architect, Engineer and appropriate inspectors shall be notified in a timely manner for a reinforcement inspection prior to the placement of any concrete.
13. The Contractor shall obtain approval from the Architect and the Engineer prior to placing sleeves, pipes, ducts, chases, coring and opening on or through structural concrete beams, walls, floors, and roof slabs unless specifically detailed or noted on the plans. All piles or conduits passing through concrete members shall be sleeved with standard steel pipe sections.
14. The Contractor is responsible for design, installation, maintenance and removal of all formwork. Forms shall be properly constructed, sufficiently tight to prevent leakage, sufficiently strong, and braced to maintain their shape and alignment until no longer needed for concrete support. Joints in formwork shall be tightly fitted and blocked, and shall produce a finished concrete surface that is true and free from blemishes. Forms for exposed concrete shall be pre-approved by the Architect to ensure conformance with design intent.
15. Remove form work in accordance with the following schedule:
    - (a) Forms at slab edge: 1 day
    - (b) Side forms at footings: 2 days
    - (c) All other vertical surfaces: 7 days
    - (d) Beams, columns, girders: 15 days
    - (e) Elevated slabs: 28 days

    Engineer reserves the right to modify removal schedule above based on field observations, concrete conditions, and/or concrete test results.
16. All concrete (except slabs-on-grade 6" or less) shall be mechanically vibrated as it is placed. Vibrator to be operated by experienced personnel. The vibrator shall be used to consolidate the concrete. The vibrator shall not be used to convey concrete, nor shall it be placed on reinforcing and/or forms.
17. Concrete shall be maintained in a moist condition for a min. of five (5) days after placement.
18. Concrete shall not be permitted to free fall more than six (6) feet. For heights greater than six (6) feet, use tremie, pump or other method consistent with applicable standards.
19. When specified ultimate compressive strength is greater than 2500 psi, Contractor shall submit mix designs to Architect and Engineer for approval seven (7) days prior toplacement. Mix designs shall be prepared by an approved testing laboratory. Sufficient data must be provided for all admixtures.
20. Refer to Architectural plans for locations of all dimensions, slab depressions, slopes, drains, curbs, and control joints.

FOUNDATIONS

1. Refer to Structural Design Parameters section on sheet S-1.1 for all soil design values used in calculations.
2. Soils values per geologic/geotechnical report (or "soils report") by Braun & Associates, Inc., Project No. W.O. #3014, dated August 22, 2019. This report and all recommendations contained therein are to be considered a part of these plans.
3. It is the Contractor's responsibility to obtain a copy of the soils report from the Owner. A copy of the soils report shall be on the job site during the course of construction.
4. Unexpected Soil Conditions: Allowable values and subsequent foundation designs are based on soil conditions which are shown by test borings. Actual soil conditions which deviate appreciably from that shown in the test borings shall be reported to the Engineer immediately.
5. All compaction, fill, backfilling and site preparation shall be performed in accordance with project soils report or the Governing Building Code Chapter 18 & Appendix J. All such work shall be performed per the recommendations of the project soils engineer.
6. Excavate to required depths and dimensions (as indicated in the drawings), cut square and smooth with firm level bottoms. Care shall be taken not to over-excavate foundation at lower elevation and prevent disturbance of soils around high elevation.
7. Foundations shall be poured in neat excavations.
8. Excavate all foundations to required depths into compacted fill or natural soil (as per plans and details) and as verified by the building official and/or soils engineer.
9. All foundations shall be inspected and approved by the appropriate building official and/or a representative of the soils engineer prior to forming and placement of reinforcing or concrete.
10. Foundations shall not be poured until all required reinforcing steel, framing hardware, sleeves, inserts, conduits, pipes, etc. and formwork is properly placed and inspected by the appropriate building official/inspector(s).
11. It is the responsibility of the contractor in charge of framing to properly position all holdown bolts, anchor bolts, column bases, and all other cast-in-place hardware. Refer to typical details. All hardware to be secured prior to foundation inspections.
12. The sides and bottoms of dry excavations must be moistened just prior to placing concrete. Conversely, de-water footings as required to remove standing water and to maintain optimum working conditions.
13. The Contractor shall be solely responsible for all excavation procedures including lagging, shoring, and the protection of adjacent property, structures, streets, and utilities in accordance with all federal, state and local safety ordinances. The Contractor shall provide for the design and installation of all cribbing, bracing and shoring required.

ROUGH CARPENTRY

1. Refer to latest edition of the the Governing Building Code, Table 2304.10.1. for all minimum nailing requirements.
2. Refer to individual sections for applicable material specifications.
3. Fabricate, size, install, connect, fasten, bore, notch, and cut wood and plywood with joints true, tight, and well-nailed, screwed or bolted as required, all members to have solid bearing without being shimmed, unless noted otherwise. Set horizontal members subject to bending with the crown up. Install framing plumb, square, true and cut for full bearing. Splices are not permitted between bearings. Use full lengths unless otherwise specified.
4. Metal framing angles, anchor, clips, straps, ties, holdowns, etc. shall be mfg by Simpson Strong-Tie Co. No substitutions shall be permitted without prior approval of the Engineer.
5. All walls are to have continuous double 2x top plates spliced as followings unless specifically noted otherwise on the plans and details.
6. Wall Studs:
   - (a) Unless specifically noted on the plan and details, use the following guidelines for wall framing:
     - i. Use 2x4 studs at 16" oc for walls less than 9'-0" tall.
     - ii. Walls 9'-0" to 16'-0" tall shall be constructed of 2x6 studs at 16" oc
     - iii. Request specifically engineered wall details for walls greater that 16'-0" tall.
7. Blocking:
   - (a) Provide min. one row of nominal 2" thick blocking of same width as stud, fitted snugly and spiked into studs at mid-height of partitions or walls over 8' high.
   - (b) All foundation cripple walls (or "pony walls") less than 14" in height shall be solid blocking.
   - (c) Refer to shearwall section for additional blocking requirements.
8. Notching:
   - (a) Is not permitted of any structural member without prior approval
   - (b) In exterior and bearing walls, notches shall not exceed 25% of the stud depth.
   - (c) Non-bearing partition walls, notches shall not exceed 40% of the stud depth.
   - (d) Successive notches in the same member shall be spaced a min of 18" apart.
9. Boring:
   - (a) Is not permitted of any structural member without prior approval
   - (b) In exterior and bearing walls, holes shall not exceed 40% of the stud depth.
   - (c) Non-bearing partition walls, may be drilled not greater than 60% of stud depth.
   - (d) Successive holes in the same member shall be spaced a minimum of 18" apart.
10. Bearing:
    - (a) Provide a min. of 1-1/2" of bearing for all 2x joists and hdrs 4x10 / 6x8 & smaller.
    - (b) Provide a min. of 3" of bearing for all beams and hdrs 4x12 / 6x10 & larger, UNO on plans.
    - (c) Members bearing on prefabricated hangers are to have full bearing and nailing per manufacturer's specifications.
11. Posts:
    - (a) Posts inside walls shall bear on sill plates and shall be continuous between top and bottom plates, unless specifically noted otherwise.
    - (b) Provide posts under all beams, girders or double joists equal to the width of the supported member.
    - (c) Posts on upper levels are to be stacked on posts of equal size at levels below, unless a larger post is specified on the plans.
    - (d) Vertical continuous blocking ("squash blocking") shall be used to fully transfer the post area through floors to foundation. Vertical blocking shall be equal to floor thickness plus 1/16".
    - (e) Headers framing into continuous posts without trimmer studs shall be supported in Simpson HUC hangers unless noted otherwise on the plans.
    - (f) Posts when isolated, shall be seated in Simpson post or column bases, unless noted otherwise on the plans
12. Roof Framing:
    - (a) Provide wood joists, as specified, laid with the crown up and spaced as indicated.
    - (b) Provide a minimum of 1-1/2" end bearing unless otherwise shown.
    - (c) Provide full depth solid 2x blkg or cross-bridging between the joists at 8' oc max.
    - (d) Provide all cricket framing required to achieve positive drainage per Arch.
    - (e) Install plywood panels with the face grain across the framing and close joints and nail at each support. Fully nail with common nails per the plans.
    - (f) Plywood panels shall not be less than 4' x 8' except at boundaries and changes in framing direction, where the minimum panel dimension shall be no less than 24", unless all edges of undersized panels are supported by and fastened to framing members or blocking.
    - (g) Provide Simpson "PSCL" clips at all plywood joints perpendicular to framing. Provide clips midway between framing members at the unsupported edges of plywood when members are spaced at 24" oc or greater. If clips are not used, provide solid blocking for joints perpendicular to framing.
13. Floor Framing:
    - (a) Provide wood joists, as specified, laid with the crown up and spaced as indicated.
    - (b) Provide a minimum of 1-1/2" end bearing unless otherwise shown.
    - (c) Provide full depth solid 2x blkg or cross-bridging between the joists at 8' oc max. For floors framed with I joists, refer to the mfg's spec's for blkg requirements.
    - (d) Provide full depth solid 2x blocking between the joists under all walls and partitions where the wall or partition is perpendicular to the floor framing (including floors framed with I joists)
    - (e) Install plywood sheathing with the face grain across supports, end supports staggered, and the edges of sheets centered over supports. If T&G plywood issused, blocking need not be provided at all plywood edges (UNO per plan). If T&G plywood is not used, blocking shall be provided at all plywood edges. Glue plywood to joists and fully nail with common nails per the plans.
    - (f) Plywood panels shall not be less than 4' x 8' except at boundaries and changes in framing direction, where the minimum panel dimension shall be no less than 24", unless all edges of undersized panels are supported by and fastened to framing members or blocking.
14. Shear Walls:
    - (a) Refer to plans for all shearwall locations, length type and nailing.
    - (b) Refer to Shearwall Schedule on title sheet for additional information.
    - (c) Shear wall lengths specified on plans are minimum required.
    - (d) Shear walls to be nailed with common nails. All nails to have minimum 3/8" edge distance to panel or framing member.
    - (e) Where 3x framing is required per the shear wall schedule, stagger edge nailing.
    - (f) Oriented Strand Board (OSB) may be used in lieu of plywood.

TIMBER / LUMBER

1. All structural lumber shall be Douglas Fir-Larch, S4S and shall conform to the Governing Building Code, section 2303.1.1.
2. The minimum lumber grade of each member shall be as follows (unless specifically notedotherwise on plans and details) :
   - (a) 2x studs, blocking, plates:Stud
   - (b) 2x joists #2 or better
   - (c) 4x4, 4x6, or 6x6 beams or posts #2 or better
   - (d) 4x8, 6x8, or larger beams or posts #1 or better

   It is recommended (but not required) that all exposed members be Select Structural or better and free of heart center due to visual characteristics.
3. All lumber in contact with concrete or masonry shall be pressure treated Douglas Fir. Whenever it is necessary to cut, notch, bore or splice pressure treated material, all newlycut surfaces shall be thoroughly painted with the same preservative.
4. Maximum moisture content for all structural members shall not exceed 19%.
5. All plywood sheathing shall be CDX grade (or better) Douglas Fir with exterior glue. All sheathing shall conform to the Governing Building Code Standard 23-2 and grade-marked by the American Plywood Association (APA). Panel index to be 40/20 for floors and 24/0 for roofs unless specifically noted otherwise on the plans and details.

REINFORCEMENT

1. Reinforcing steel shall be to deformed, clean, free of rust, grease or any other material likely to impair concrete bond.
2. All bars shall conform to ASTM A615, Grade 60 minimum (UNO on structural plans). All weld wire fabric (WWF) shall conform to ASTM A185.
3. Reinforcing steel that is to be welded shall conform to ASTM A706. All welding of reinforcement shall be subject to special inspection.
4. Contractor shall take necessary steps (standard ties, anchorage devices, etc.) to secure all reinforcing steel in their true position and prevent displacement during concrete placement.
5. Fabrication, placement and installation of reinforcing steel shall conform to:
   - (a) Concrete Reinforcing Steel Institute (CRSI) Manual of Standard Practice
   - (b) the Governing Building Code, Section 1907.
6. Shop drawings for fabrication of reinforcing steel shall be approved by the Contractor and submitted to the Architect and Engineer for review and approval prior to fabrication. Shop drawings are not required for slabs-on-grade or foundations unless specifically noted on the structural plans.
7. Heating of reinforcing steel to aid in bending and shaping of bars is not permitted. All bends in reinforcing steel are to be made cold. All bend radii shall conform to CRSI Manual of Standard Practice.
8. Refer to Concrete and Masonry notes for specific minimum splice length and splice staggering requirements. Lap welded wire fabric (WWF) reinforcement two (2) modules minimum (UNO). All splices are to be staggered.

ENGINEERED LUMBER

1. Glu-laminated Beams (GLB):
   - (a) shall be 24F-V4 for simple single spans and 24F-V8 for beams that are cantilevered &/or continuous over interior supports. They shall have the following min. properties:
     - i. Fb = 2400 psi
     - ii. Fv = 265 psi
     - iii. Fc = 650 psi
     - iv. E = 1800 ksi
   - (b) shall not be notched, cut or drilled without prior approval from the Engineer
   - (c) shall have exterior glue and weather-treatment prior to installation
   - (d) shall be fabricated by an approved manufacturer. An A.I.T.C. Certificate of Compliance shall be given to the building inspector prior to installation
   - (e) shall have factory standard camber, except where noted otherwise on the plans
2. Laminated Veneer Lumber (LVL) :
   - (a) shall be 1-3/4" minimum thickness with the following minimum properties:
     - i. E = 2000 ksi
     - ii. Fb = 2600 psi
     - iii. Fv = 285 psi
     - iv. Fc (parallel) = 2500 psi
     - v. Fc (perp.) = 750 psi
     - vi. Ft (parallel) = 1500 psi
     - vii. Specific Gravity = 0.50
   - (b) shall be fabricated by an approved manufacturer
   - (c) shall bear a minimum of 3-1/2" on specified supports. Provide full depth solid blocking at all bearing points
   - (d) shall be nailed in accordance with mfg's specifications. Unless otherwise approved, nailing into the top edge shall not be spaced any closer than:
     - i. 16d @ 6" oc, 10d @ 4" oc, and 8d @ 3" oc
     - ii. When nailing must be reduced, stagger rows a minimum of 1/2" apart while maintaining proper edge distances.
   - (e) shall be, when comprised of multiple members, connected with 16d nail, 1/2" bolts or 1/4" lag screws in accordance with manufacturer's specifications.
   - (f) shall not be cut, notched or drilled without specific written approval of the EOR.
3. Laminated Strand Lumber (LSL) :
   - (a) shall be 1-1/4" minimum thickness with the following minimum properties:
     - i. E = 1550 ksi
     - ii. Fb = 2325 psi
     - iii. Fv = 310 psi
     - iv. Fc (parallel) = 2500 psi
     - v. Fc (perp.) = 800 psi
     - vi. Ft (parallel) = 1070 psi
     - vii. Specific Gravity = 0.50
   - (b) shall be fabricated by an approved manufacturer
   - (c) shall bear a minimum of 3-1/2" on specified supports. Provide full depth solid blocking at all bearing points
   - (d) shall be nailed in accordance with mfg's specifications. Unless otherwise approved, nailing into the top edge shall not be spaced any closer than:
     - i. 16d @ 6" oc, 10d @ 4" oc, and 8d @ 3" oc
     - ii. When nailing must be reduced, stagger rows a minimum of 1/2" apart while maintaining proper edge distances.
   - (e) shall be, when comprised of multiple members, connected with 16d nail, 1/2" bolts or 1/4" lag screws in accordance with manufacturer's specifications.
   - (f) shall not be cut, notched or drilled without specific written approval of the EOR.
4. Parallel Strand Lumber (PSL) :
   - (a) shall be 2-1/2" minimum thickness with the following minimum properties:
     - i. E = 2000 ksi
     - ii. Fb = 2900 psi
     - iii. Fv = 290 psi
     - iv. Fc (parallel) = 2900 psi
     - v. Fc (perp.) = 750 psi
     - vi. Ft (parallel) = 2025 psi
     - vii. Specific Gravity = 0.50
   - (b) shall be fabricated by an approved manufacturer
   - (c) shall bear a minimum of 3-1/2" on specified supports. Provide full depth solid blocking at all bearing points
   - (d) shall be nailed in accordance with manufacturer's specifications. Unless otherwise approved, nailing shall not be spaced any closer than:
     - i. Narrow face: 16d @ 6" oc, 10d @ 4" oc, and 8d @ 3" oc
     - ii. Wide Face: 16d @ 8" oc, and 10d & 8d @ 6" oc
     - iii. When nailing must be reduced, stagger rows a minimum of 1/2" apart while maintaining proper edge distances
   - (e) shall not be cut, notched or drilled without specific written approval of the EOR.
5. Plywood I Joists:
   - (a) type and manufacturer shall be clearly noted on the plans. Substitutions shall not be permitted without prior approval of the Engineer.
   - (b) shall be installed in accordance with applicable code approvals and mfg's spec's.
   - (c) shall bear a minimum of 1-3/4" at all end supports, and 3-1/2" at intermediate supports. Provide full depth solid blocking at all bearing points.
   - (d) shall be installed with intermediate blocking or bridging as specified by the Mfr. Only omit intermediate blocking when specifically allowed by the Mfr.
   - (e) shall not be cut, notched or drilled without specific written approval of the EOR.

FASTENERS

1. Nails:
   - (a) shall be with "common" nails unless noted otherwise.
   - (b) shall not be driven closer than 1/2 their length nor closer than 1/4 of their length to the edge or end of a member, except for sheathing.
   - (c) shall be installed in pre-drilled lead holes if necessary to avoid splitting.
   - (d) shall be hot-dipped zinc-coated galvanized steel, stainless steel, silicon bronze, or copper when in contact with preservative-treated wood.
     - i. When used in exterior applications, nails shall have coating types and weights in accordance with the treated wood or bolt manufacturer's Recs. A Min. of ASTM A653, type G185 zinc-coated galvanized steel (or equiv.) shall be used.
     - ii. When used in an interior, dry environment in SBX/DOT or zinc borate preservative-treated wood, plain carbon nails shall be permitted.
   - (e) All nailing shall conform to the Governing Building Code, Table 2304.10.1.
2. Lag screws:
   - (a) shall be installed into pre-drilled lead holes. Lubricant (or soap) shall be used to facilitate installation and prevent damage to the screws.
   - (b) shall be hot-dipped zinc-coated galvanized steel or stainless steel when in contact with preservative-treated wood.
     - i. When used in exterior applications, bolts shall have coating types and weights in accordance with the treated wood or bolt manufacturer's rec's. A minimum of ASTM A653, type G185 zinc-coated galvanized steel (or equal) shall be used.
     - ii. When used in dry interior environments in SBX/DOT or zinc borate preservative-treated wood, plain carbon screws, nuts, and washers shall be permitted.
3. Bolts:
   - (a) shall conform to ASTM A307, UNO specifically on plans and details.
   - (b) shall be installed in pre-drilled holes a max of 1/16" larger than the specified bolt dia.
   - (c) when installed against wood surfaces, shall have standard washers under the heads and nuts.
   - (d) shall be hot-dipped zinc-coated galvanized steel or stainless steel when in contact with preservative-treated wood.
     - i. When used in exterior applications, bolts shall have coating types and weights in accordance with the treated wood or bolt manufacturer's rec's. A minimum of ASTM A653, type G185 zinc-coated galvanized steel (or equal) shall be used.
     - ii. When used in dry interior environments in SBX/DOT or zinc borate preservative-treated wood, plain carbon screws, nuts, and washers shall be permitted.
4. Anchor Bolts:
   - (a) shall be installed at all exterior walls and all interior shear and/or bearing walls.
   - (b) shall be 5/8" diameter with 3x3x0.229" steel plate washers at shearwalls.
   - (c) shall be 5/8" diameter with 2x2x3/16" steel plate washers at non-shearwalls.
   - (d) shall have 7" minimum embedment. (Contractor to coordinate length of bolts with sill plate thicknesses).
   - (e) shall conform to ASTM F1554, Grade 36.
   - (f) shall be hot-dipped zinc-coated galvanized steel or stainless steel when in contact with preservative-treated wood.
     - i. When used in exterior applications, bolts shall have coating types and weights in accordance with the treated wood or bolt manufacturer's rec's. A minimum of ASTM A653, type G185 zinc-coated galvanized steel (or equal) shall be used.
     - ii. When used in dry interior environments in SBX/DOT or zinc borate preservative-treated wood, plain carbon screws, nuts, and washers shall be permitted.
   - (g) shall not be spaced greater than 72" oc Refer to shearwall schedule for specific anchor bolt spacing requirements.
   - (h) shall be placed a maximum of 12" from wall corners, wall ends, and sill plate splices (but not less than 7 dia.) , and a min. of two bolts per piece of sill plate is required.
   - (i) shall be secured in place prior to foundation inspection.
5. Powder Actuated Shot Pins:
   - (a) shall be installed at all interior non-bearing, non-shearwalls.
   - (b) shall be 0.145x3" with 1.5" diameter steel washers.
   - (c) shall not be spaced greater than 32" o.c.

Ashley&Vance ENGINEERING, INC.
210 East Coata Street
Santa Barbara, CA 93101
(805) 962-9966
www.ashleyvance.com
CIVIL • STRUCTURAL

The use of these plans and specifications shall be restricted to the original site for which they were prepared and publication thereof is expressly limited to such use. Reproduction or publication by any method, in whole or in part, is prohibited. Title to these plans and specifications remain with Ashley & Vance Engineering, Inc. without prejudice. Visual contact with these plans and specifications shall constitute prima facie evidence of the acceptance of these restrictions.

Engineer of Record:

REGISTERED PROFESSIONAL ENGINEER
CRAIG W. PRUETT
C 77909
CIVIL
STATE OF CALIFORNIA
PLAN REVIEW SET
NOT FOR CONSTRUCTION

Block Residence

1790 Sycamore Canyon Road
Santa Barbara, CA 93108

Revision:

Proj. Engr.: R. Gabriel	Phone Ext.: 131
Proj. Mngr.: C. Pruett	
Date: 9 Oct. 2019	Scale: NTS
A&V Job No.: 181380	

STRUCTURAL SPECIFICATIONS

S-1.2

DO NOT SCALE THESE DRAWINGS. Refer to Architectural plans for all dimensions.

Oct 9, 2019
2:21:03 PM

STATEMENT OF SPECIAL INSPECTIONS, 2016 CBC

1. This Statement of Special Inspection is submitted in fulfillment of the requirements of the Governing Building Code, section 1704 and 1705.
2. Special Inspections and Testings will be preformed in accordance with the approved plans and specifications, this statement and the Governing Building Code, Section 1704 , 1705 , 1707 , and 1708.
3. The schedule of Special Inspections summarizes the Special Inspections and tests required. Special Inspectors will refer to the approved plans and specifications for detailed special inspection requirements. Any additional tests and inspections required by the approved plans and specifications will also be performed.
4. Interim reports will be submitted to the Building Official and the Registered Design Professional in Responsible Charge in accordance with the Governing Building Code Section 1704.2.4.
5. A Final Report of Special Inspections documenting required Special Inspections, testing and correction of any discrepancies noted in the inspections shall be submitted prior to issuance of a Certificate of Use and Occupancy (Section 1704.2.4). The Final Report will document:
   (a) Required special inspections.
   (b) Correction of discrepancies noted in inspections.
6. The Owner recognizes his or her obligation to ensure that the construction complies with the approved permit documents and to implement this program of special inspections. In partial fulfillment of these obligations, the Owner will retain and directly pay for the Special Inspections as required in the Governing Building Code, Section 1704.2.
7. 1704.4 Contractor responsibility. Each contractor responsible for the construction of a main wind- or Seismic-force-resisting system, designated seismic system or a wind- or seismic-resisting component listed in The statement of special inspections shall submit a written statement of responsibility to the building official and the owner prior to the commencement of work on the system or component. The contractor's statement of responsibility shall contain acknowledgement of awareness of the special requirements contained in the statement of special inspection.

SCHEDULE OF TESTING AGENCIES & SPECIAL INSPECTORS

The following are the testing agencies and special inspectors that will be retained to conduct tests and inspection on this project.

Responsibility	Firm	Address, Telephone, Email
1. Special Inspection (Except for Geotechnical)		
2. Materials Testing		
3. Geotechnical Inspection		
*		

* Additional inspections may be required at the discretion of the Building Official.

SEISMIC REQUIREMENTS (Section 1705.12)

Description of seismic-force-resisting system and designated seismic systems subject to special inspections per Section 1705.11:

Light-framed walls sheathed with wood structural panels rated for shear resistance or steel sheets (ASCE 7, Table 12.2-1, Line A.15)

The extent of the main seismic-force-resisting system is defined in more detail in the construction documents.

WIND REQUIREMENTS (Section 1705.11)

Description of main wind-force-resisting system and designated seismic systems subject to special inspections per Section 1705.10:

Not Applicable

The extent of the main wind-force-resisting system is defined in more detail in the construction documents.

SCHEDULE OF SPECIAL INSPECTIONS

Column Header Notation Used in Table:
- C Indicates continuous inspection is required.
- P Indicates periodic inspections are required. The notes and/or contract documents should clarify.

Box Entry Notation Used in Table:
- X Is placed in the appropriate column to denote either "C" continuous or "P" periodic inspections.
- -- Denotes a one-time activitiy or one whose frequency is defined in some other manner.

Additional details regarding inspections are provided in the project specifications or notes on the drawings.

Verification & Inspection	C	P	Notes
1704.2.5 - Inspect fabricator's fabrication and quality control procedures.	--	--	
1705.2 - Steel			
1. Material verification of high-strength bolts, nuts, and washers		X	
a. Identification markings to conform to ASTM standards specified in the approved construction documents		X	
b. Manufacturer's certificate of compliance required		X	
2. Inspection of high-strength bolting:			
a. Bearing-type connections		X	
b. Slip-critical connections	X		
3. Material verification of structural steel:			
a. Identification markings to conform to ASTM standards specified in the approved construction documents	--	--	
b. Manufacturer's mill test reports	--	--	
4. Material verification of weld filler materials:			
a. Identification markings to conform to AWS designation listed in the WPS	--	--	
b. Manufacturer's certificate of compliance required	--	--	
5. Inspection of Welding: a. Structural Steel			
1) Complete and partial penetration groove welds	X		
2) Multi-pass fillet welds	X		
3) Single-pass fillet welds > 5/16"		X	
4) Single-pass fillet welds < 5/16"		X	
5) Floor and roof deck welds		X	
b. Reinforcing Steel			
1) Verification of weldability of reinforcing steel other than ASTM A706		X	
2) Reinforcing steel resisting flexural and axial forces in intermediate and special moment frames, and boundary elements of special reinforced concrete shear walls, and shear reinforcement	X		
3) Shear reinforcement	X		
4) Other reinforcing steel		X	
6. Inspection of steel frame joint details for compliance with approved construction documents (bracing & stiffening, member locations, application of joint details at each connection, etc.)		X	
7. Welded studs when used for structural diaphragms		X	
8. Welding of cold formed sheet steel framing members		X	
9. Welding of stairs and railing systems		X	
1705.3 - Concrete			
1. Inspect reinforcing steel, including prestressing tendons, verify and placement		X	
2. Inspect reinforcing steel welding in accordance with Table **1705.2 - Steel**, item 5a	--	--	
3. Inspect bolts to be cast in concrete prior to and during placement of concrete	X		
4. Inspect anchors post-installed in hardened concrete			
a. Adhesive anchors[1] installed in horizontally or upwardly inclinded orientations to resist sustained tension	X		
b. Mechanical anchors[2] and adhesive anchors[1] not defined in 4.a		X	
5. Verifying use of required design mix		X	
6. Prior to concrete placement, fabricate specimens for strength tests, perform slump and air content tests, and determine the temperature of the concrete	X		
7. Inspect concrete and shotcrete placement for proper application techniques	X		
8. Verify maintenance of speciified curing temperature and techniques		X	
9. Inspect prestressed concrete for:			
a. Application of prestressing forces	X		
b. Grouting of bonded prestressing tendons	X		
10. Inspect erection of precast concrete members		X	
11. Verify in-situ concrete strength, prior to stressing of tendons in post-tensioned concrete and prior to removal of shores and forms from beams and structural slabs		X	
12. Inspect formwork for shape, location, and dimensions of the concrete member being formed		X	

FOOTNOTES:
1. Prior to epoxy placement, it must be verified that the hole is clean, dry, and free of loose debris
2. Periodic inspection shall take place such that the installation of a minimum of two (2) anchors per each shear wall are observed

Verification & Inspection	C	P	Notes
1705.5 - Wood			
1. Inspect prefabricated wood structural elements and assemblies in accordance with Section 1704.2.5	--	--	
2. Inspect site-built assemblies	--	--	
3. Inspect high-load diaphragms:			
a. Verify grade and thickness of sheathing.	--	--	
b. Verify nominal size of framing members at adjoining panel edges.	--	--	
c. Verify: 1) Nail (or staple) diameter and length. 2) Number of fastener lines. 3) Spacing between fasteners in each line and at edge margins.	--	--	
1705.6 - Soils			
1. Verify materials below shallow footings are adequate to achieve the desired bearing capacity		X	
2. Verify excavations are extended to proper depth and have reached proper material		X	
3. Perform classification and testing of compacted fill materials		X	
4. Verify use of proper materials, densities, and lift thicknesses during placement and compaction of compacted fill	X		
5. Prior to placement of compacted fill, inspect subgrade and verify that site has been prepared properly		X	
1705.8 - Cast-in-Place Deep Foundations			
1. Inspect drilling operations and maintain complete and accurate records for each element	X		
2. Verify placement locations and plumbness, confirm element diameters, bell diameters (if applicable), lengths, embedment into bedrock (if applicable) and adequate end-bearing strata capacity. Record concrete or grout volumes	X		
3. For concrete elements, perform tests and additional inspections in accordance with Section **1705.3**	--	--	
1705.12.2 - Seismic Resistance - Structural Wood			
1. Inspect field gluing operations of elements of the main seismic force-resisting system	X		
2. Inspect nailing, bolting, anchoring, and other fastening of elements of the main seismic force-resisting system, including wood shear walls, wood diaphragms, collectors (drag struts), braces, shear panels, and hold-downs		X	Inspection of shear walls and diaphragms with fasteners spaced greater than 4" oc is not required

Ashley&Vance ENGINEERING, INC.
210 East Cota Street
Santa Barbara, CA 93101
(805) 962-9966
www.ashleyvance.com
CIVIL • STRUCTURAL

The use of these plans and specifications shall be restricted to the original site for which they were prepared and publication thereof is expressly limited to such use. Reproduction or publication by any method, in whole or in part, is prohibited. Title to these plans and specifications remain with Ashley & Vance Engineering, Inc. without prejudice. Visual contact with these plans and specifications shall constitute prima facie evidence of the acceptance of these restrictions.

Engineer of Record:

REGISTERED PROFESSIONAL ENGINEER
CHAD W. PRUETT
C 77909
CIVIL
STATE OF CALIFORNIA
PLAN REVIEW SET
NOT FOR CONSTRUCTION

Block Residence
1790 Sycamore Canyon Road
Santa Barbara, CA 93108

Revision:

Proj. Engr.: R. Gabriel Phone Ext.: 131
Proj. Mngr.: C. Pruett
Date: 9 Oct. 2019 Scale: NTS
A&V Job No.: 181380

SPECIAL INSPECTIONS

S-1.3

DO NOT SCALE THESE DRAWINGS. Refer to Architectural plans for all dimensions.

Oct 9, 2019
2:21:02 PM

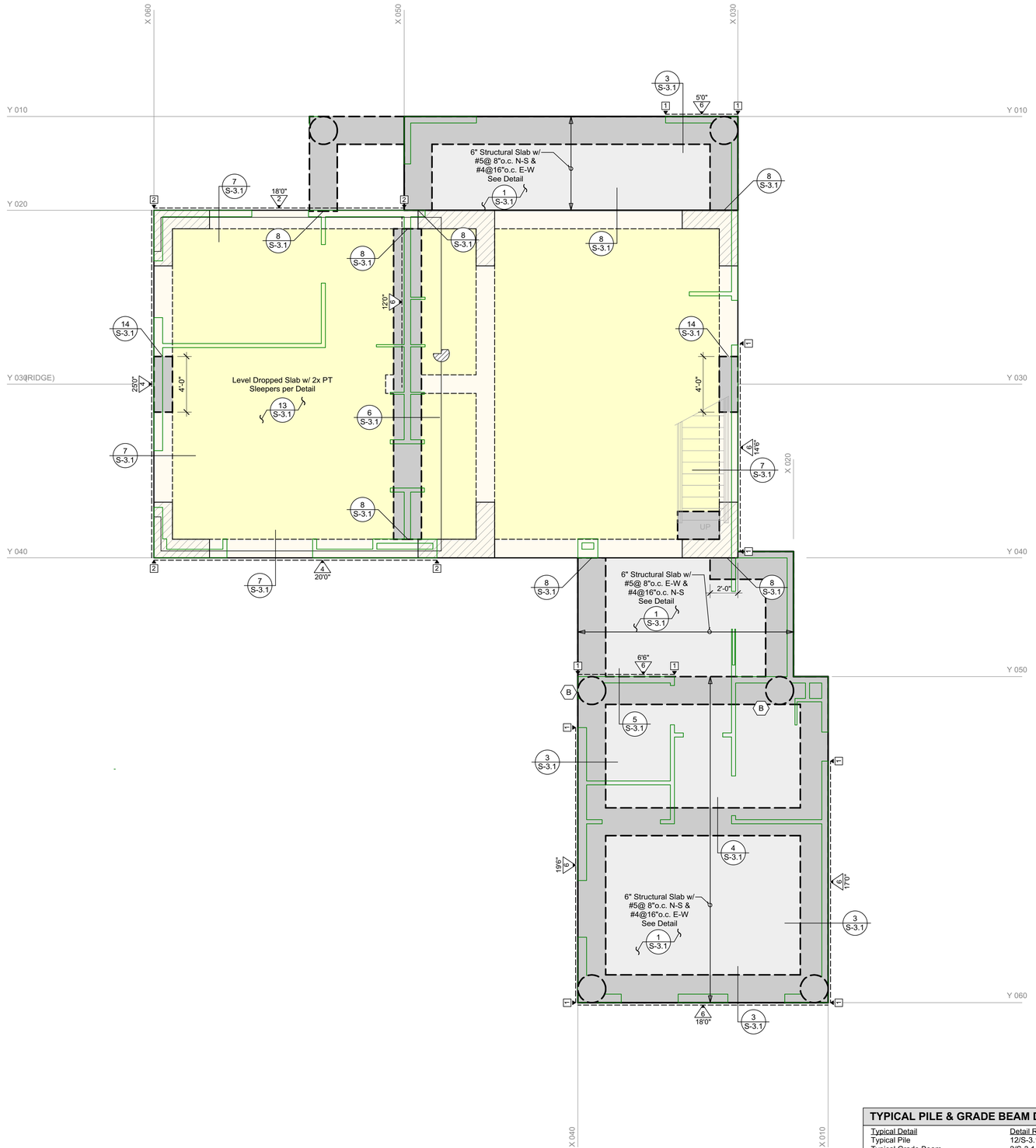

GENERAL FOUNDATION SCHEDULE

- (E) Foundation to Remain
- (E) Deepened Foundation to Remain
- (E) Slab-on-Grade to Remain
- (N) Foundation per Details — 24" Wide x 24" Embedment (UNO)
- (N) One-Way Structural Slab per Plan & Details
- Denotes Step in Slab-on-Grade Step Ht. & Extent per Arch.
- Wood Framed Wall Above (See S-2.2)
- Pile Per Plan and Detail **12/S-3.1** Piles are Type A per Pile Sched., UNO

GENERAL FOUNDATION NOTES

Please see Soils Report for additional specifications and recommendations. It is the contractor's responsibility to obtain a copy of the soils report from the owner or owners representative.

Prior to the contractor requesting a Building Department foundation inspection, the Soils Engineer shall advise the building inspector in writing that:

a) Building pad was prepared in accordance with soils report

b) Utility trenches have been properly backfilled and compacted, and

c) Foundation excavations, the soil's expansive characteristics and bearing capacity conform to the soils report.

See General Notes & Specifications for additional requirements and material specifications.

All dimensions per Architectural plans

Contractor to VERIFY all dimensions w/ Architectural plans PRIOR to commencement of construction.

Contractor shall verify all existing conditions prior to construction & contact Engineer and Architect regarding any discrepancies.

PILE SCHEDULE

ID[1]	Diameter	Reinforcing		Pile Depth	
		Ties	Vertical Reinf.	Depth "E", Min.	Total Depth "D" Min.
A	24"	#4 @ 9" o.c.	(11) #6 Cont.	12'-0"	22'-0"
B	24"	#4 @ 9" o.c.	(11) #6 Cont.	19'-0"	29'-0"

FOOTNOTES:
1. Piles are Type A Unless Noted Otherwise
2. f'_c per Concrete Strength schedule
3. For typical pile detail refer to **12/S-3.1**.

HOLDOWN SCHEDULE

TYPE	HOLDOWN[1] OPTION	ALTERNATE[2] OPTION	MIN. POST	ANCHOR / EMBEDMENT	TYPICAL DETAILS
A	CS14	HDU4	(2) 2x	N/A	Strap Holdown: 3/S-3.2, UNO; Holdown Btwn Floors: 4/S-3.2, UNO
B	CMSTC16	HDU4	(2) 2x	N/A	
C	CMST14	HDU8	4x6	N/A	
D	CMST12	HDU11	4x6	N/A	
1	HDU4	CMSTC16	(2) 2x	Per Detail	Holdown at (E) Fdn.: 17/S-3.2, UNO; Holdown at (N) Fdn.: 15, 16/S-3.1, UNO
2	HDU8	CMSTC16	4x6	Per Detail	
3	HDU11	CMST12	6x6	Per Detail	
4	HDU14	--	6x6	Per Detail	
5	HD19	--	6x8	Per Detail	

FOOTNOTES:
1. Shared holdowns to be installed per detail **10/S-1.1**, *Typical Shearwall Intersections*, (UNO)
2. All Connections to Foundations, Wood Beams, & Steel Beams must be Holdown Hardware, Straps are *not* Permitted in these instances.

SHEARWALL SCHEDULE

DESCRIPTION					NAILING[1]		TRANSFERS[2]				
NO.	MATERIALS	DBL SIDED	SILL PLATE	PANEL B'DRY	SIZE	SPC'G	5/8"Ø[3] AB	SDS[4] Screw	A35, LTP4,[5,6,7] or LTP5	RBC	16d[8]
6	15/32" CDX Plywood	N	2x	2x	10d	6"	48"	10"	20"	13"	5"
4	15/32" CDX Plywood	N	2x	3x	10d	4"	38"	7"	13"	9"	3"
3	15/32" CDX Plywood	N	2x	3x	10d	3"	29"	5"[9]	10"	7"	-
2	15/32" CDX Plywood	N	2x	3x	10d	2"	23"	4"[9]	8"	5"	-
44	15/32" CDX Plywood	Y	3x	3x	10d	4"	24"	3"[9]	6"	-	-
33	15/32" CDX Plywood	Y	3x	3x	10d	3"	18"	2"[9,10]	5"	-	-

FOOTNOTES:
1. All nails to be COMMONS. **DO NOT** use box type nails. All "field" nailing to be 12" oc, UNO.
2. All transfers to be installed into min. 1-1/2" thick members, UNO. Where clips are spaced less than 6" oc, stagger clips on each side of wall.
3. All shear walls to have 5/8" anchor bolts, embeded 7" into concrete foundations, with 3"x3"x0.229" thick plate washers, minimum. Washers may be slotted (slot length not to exceed 1-3/4") w/ standard cut washer placed between nut and plate washer. Washers shall extend within 1/2" of the edge of the bottom plate on the sheathed side. At walls sheathed on 2 sides, plate washers shall be alternated to each side of plate. [Governing Building Code, Section 2308.3.2] [AF&PA SDPWS 4.3.6.4.3]
4. Simpson SDS 1/4"x4-1/2" Screws through 2x sill, or SDS 1/4"x6" Screws through 3x sill or double plates. Install into minimum 1-3/4" thick members (rim and/or blocking). [ICC ESR 2236]
5. See details for permitted transfer clip types and locations.
6. Orient LTP4 and LTP5 clips such that the long dimension is horizontal.
7. Where LTP4 clips are installed over shear wall sheathing, fasten with full length 8d common nails.
8. 16d common nails through the sill plate to rim member or blocking.
9. Install screws into 3-1/2" wide continuous member, staggered 1-1/2" apart.
10. Install screws into Glulams or solid sawn member. LSL, LVL, or PSL members are NOT acceptable, UNO.

TYPICAL PILE & GRADE BEAM DETAILS

Typical Detail	Detail Reference
Typical Pile	12/S-3.1
Typical Grade Beam	2/S-3.1
Grade Beam Intersections	16/S-3.1
Grade Beam to Pile	10/S-3.1
Grade Beam to Existing Foundation	8/S-3.1

Ashley&Vance ENGINEERING, INC.
210 East Cota Street
Santa Barbara, CA 93101
(805) 962-9966
www.ashleyvance.com
CIVIL • STRUCTURAL

The use of these plans and specifications shall be restricted to the original site for which they were prepared and publication thereof is expressly limited to such use. Reproduction or publication by any method, in whole or in part, is prohibited. Title to these plans and specifications remain with Ashley & Vance Engineering, Inc. without prejudice. Visual contact with these plans and specifications shall constitute prima facie evidence of the acceptance of these restrictions.

Engineer of Record:

REGISTERED PROFESSIONAL ENGINEER CHAD W. PRUETT C 77909 CIVIL STATE OF CALIFORNIA

PLAN REVIEW SET NOT FOR CONSTRUCTION

Block Residence
1790 Sycamore Canyon Road
Santa Barbara, CA 93108

Revision:

Proj. Engr.: R. Gabriel Phone Ext.: 131

Proj. Mngr.: C. Pruett

Date: 9 Oct. 2019 Scale: 1/4"=1'-0"

A&V Job No.: 181380

FOUNDATION PLAN

S-2.1

DO NOT SCALE THESE DRAWINGS. Refer to Architectural plans for all dimensions.

Oct 9, 2019
2:21:04 PM

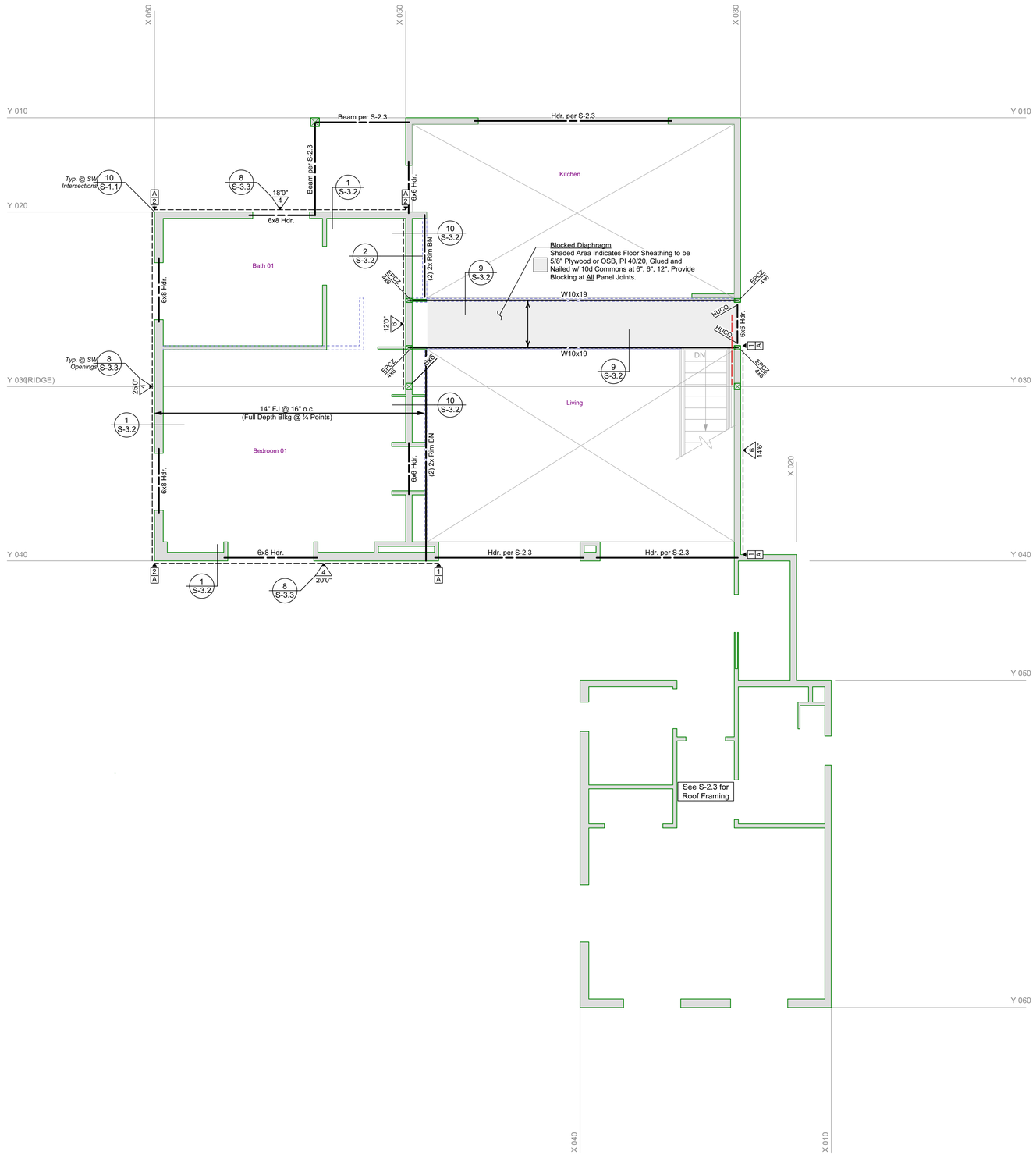

WALL SCHEDULE

Stud wall locations per Architecturals.

Wood-Framed Wall, Thk. per Arch.

2x6 D.F. Stud @ 16" oc, Min.

Provide wall length continuous full depth solid blocking (where floor joists perpendicular) or double floor joist (where joists parallel) for all walls above.

Walls above

(shown for clarity)

GENERAL FRAMING NOTES

Beams (per Call-out)

All Beams to Bear on Plates w/ Indicated Post or Doubler Below Unless Noted Otherwise

All Lumber 4x6, 6x6 and Smaller to be DF #2 UNO
All Lumber 4x8, 6x8 and Larger to be DF #1 UNO

Floor sheathing to be 3/4" plywood or OSB, T & G, PI 40/20, glued and nailed w/ 10d commons at 6", 6", 12"

All Walls to have Continuous Double Top Plates,
All Splices to be per Detail **7/S-1.1**

Floor Joists -- 14" TJI 560 @ 16" oc in Simpson ITS Hangers, Typ. (UNO)

Floor Joists -- 2x8 D.F. #2 @ 16" oc in Simpson LUS Hangers, Typ. (UNO)

Denotes Step in Framing.
Step Ht. & Extent per Arch.

Waterproofing, flashing, & finish details per Architecturals.

See General Notes & Specifications for additional requirements and material specifications.

All dimensions per Architectural plans

Contractor to VERIFY all dimensions w/ Architectural plans PRIOR to commencement of construction.

HOLDOWN SCHEDULE

TYPE	HOLDOWN[1] OPTION	ALTERNATE[2] OPTION	MIN. POST	ANCHOR / EMBEDMENT	TYPICAL DETAILS
A	CS14	HDU4	(2) 2x	N/A	Strap Holdown: 3/S-3.2, UNO Holdown Btwn Floors: 4/S-3.2, UNO
B	CMSTC16	HDU4	(2) 2x	N/A	
C	CMST14	HDU8	4x6	N/A	
D	CMST12	HDU11	4x6	N/A	
1	HDU4	CMSTC16	(2) 2x	Per Detail	Holdown at (E) Fdn.: 17/S-3.2, UNO Holdown at (N) Fdn.: 15, 16/S-3.1, UNO
2	HDU8	CMSTC16	4x6	Per Detail	
3	HDU11	CMST12	6x6	Per Detail	
4	HDU14	--	6x6	Per Detail	
5	HD19	--	6x8	Per Detail	

FOOTNOTES:
1. Shared holdowns to be installed per detail **10/S-1.1**, *Typical Shearwall Intersections*, (UNO)
2. All Connections to Foundations, Wood Beams, & Steel Beams must be Holdown Hardware, Straps are *not* Permitted in these instances.

SHEARWALL SCHEDULE

DESCRIPTION					NAILING[1]		TRANSFERS[2]				
NO.	MATERIALS	DBL. SIDED	SILL PLATE	PANEL B'DRY	SIZE	SPC'G	5/8"Ø[3] AB	SDS[4] Screw	A35, LTP4, [5,6,7] or LTP5	RBC	16d[8]
6	15/32" CDX Plywood	N	2x	2x	10d	6"	48"	10"	20"	13"	5"
4	15/32" CDX Plywood	N	2x	3x	10d	4"	38"	7"	13"	9"	3"
3	15/32" CDX Plywood	N	2x	3x	10d	3"	29"	5"[9]	10"	7"	-
2	15/32" CDX Plywood	N	2x	3x	10d	2"	23"	4"[9]	8"	5"	-
44	15/32" CDX Plywood	Y	3x	3x	10d	4"	24"	3"[9]	6"	-	-
33	15/32" CDX Plywood	Y	3x	3x	10d	3"	18"	2"[9,10]	5"	-	-

FOOTNOTES:
1. All nails to be COMMONS. **DO NOT** use box type nails. All "field" nailing to be 12" oc, UNO.
2. All transfers to be installed into min. 1-1/2" thick members, UNO. Where clips are spaced less than 6" oc, stagger clips on each side of wall.
3. All shear walls to have 5/8" anchor bolts, embeded 7" into concrete foundations, with 3"x3"x0.229" thick plate washers, minimum. Washers may be slotted (slot length not to exceed 1-3/4") w/ standard cut washer placed between nut and plate washer. Washers shall extend within 1/2" of the edge of the bottom plate on the sheathed side. At walls sheathed on 2 sides, plate washers shall be alternated to each side of plate. [Governing Bulding Code, Section 2308.3.2] [AF&PA SDPWS 4.3.6.4.3]
4. Simpson SDS 1/4"x4-1/2" Screws through 2x sill, or SDS 1/4"x6" Screws through 3x sill or double plates. Install into minimum 1-3/4" thick members (rim and/or blocking). [ICC ESR 2236]
5. See details for permitted transfer clip types and locations.
6. Orient LTP4 and LTP5 clips such that the long dimension is horizontal.
7. Where LTP4 clips are installed over shear wall sheathing, fasten with full length 8d common nails.
8. 16d common nails through the sill plate to rim member or blocking.
9. Install screws into 3-1/2" wide continuous member, staggered 1-1/2" apart.
10. Install screws into Giulams or solid sawn member. LSL, LVL, or PSL members are NOT acceptable, UNO.

Ashley&Vance ENGINEERING, INC.
210 East Cota Street
Santa Barbara, CA 93101
(805) 962-9966
www.ashleyvance.com
CIVIL • STRUCTURAL

The use of these plans and specifications shall be restricted to the original site for which they were prepared and publication thereof is expressly limited to such use. Reproduction or publication by any method, in whole or in part, is prohibited. Title to these plans and specifications remain with Ashley & Vance Engineering, Inc. without prejudice. Visual contact with these plans and specifications shall constitute prima facie evidence of the acceptance of these restrictions.

Engineer of Record:

REGISTERED PROFESSIONAL ENGINEER
CHAD W. PRUETT
C 77909
CIVIL
STATE OF CALIFORNIA
PLAN REVIEW SET
NOT FOR CONSTRUCTION

Block Residence

1790 Sycamore Canyon Road
Santa Barbara, CA 93108

Revision:

Proj. Engr.: R. Gabriel Phone Ext.: 131
Proj. Mngr.: C. Pruett
Date: 9 Oct. 2019 Scale: 1/4"=1'-0"
A&V Job No.: 181380

FLOOR FRAMING PLAN

S-2.2

DO NOT SCALE THESE DRAWINGS. Refer to Architectural plans for all dimensions.

Oct 9, 2019
2:21:05 PM

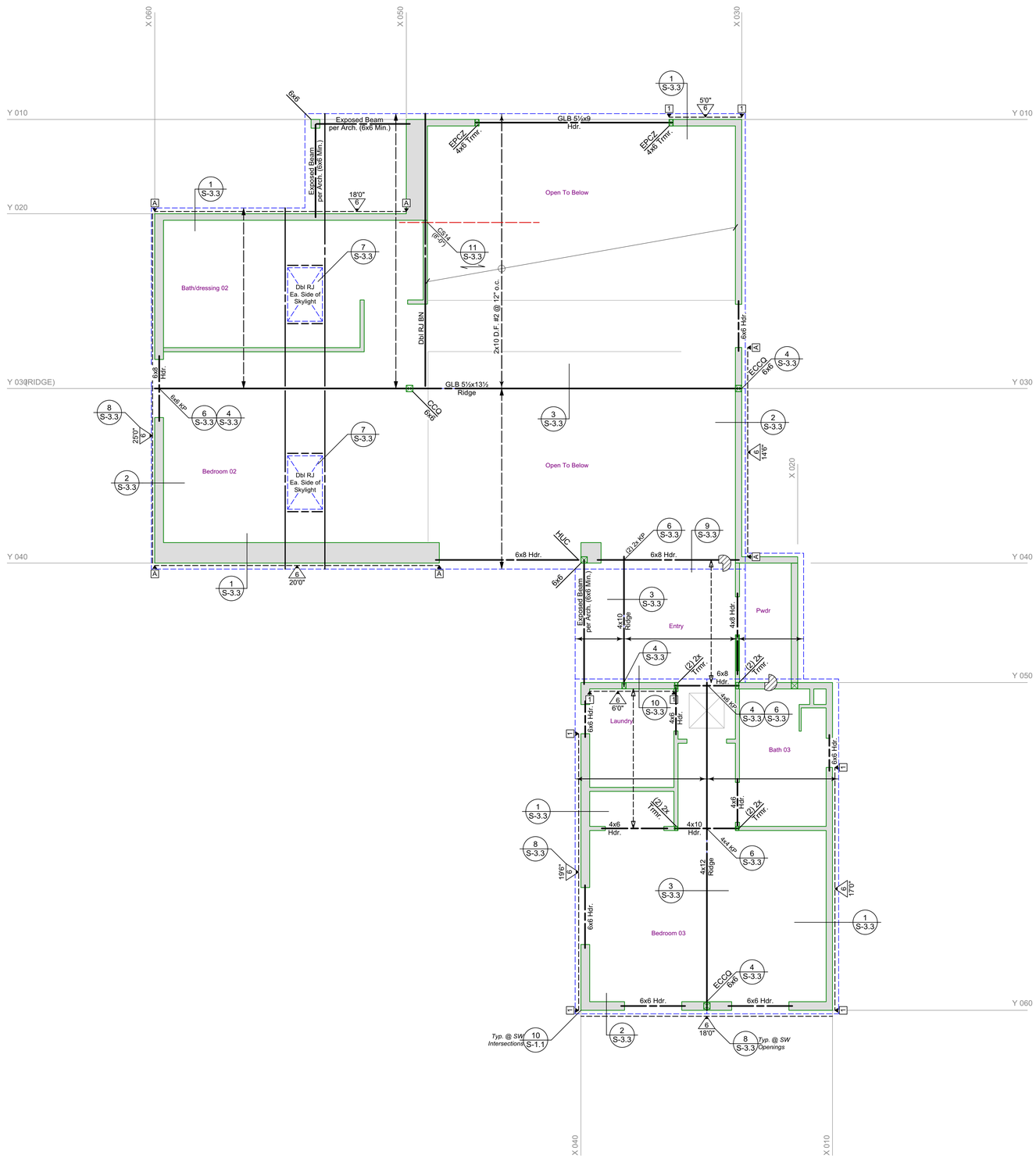

WALL SCHEDULE

Stud wall locations per Architecturals.

Wood-Framed Wall, Thk. per Arch.

2x6 D.F. Stud @ 16" oc, Min.

GENERAL FRAMING NOTES

Beams (per Call-out)

All Beams to Bear on Plates w/ Indicated Post or Doubler Below Unless Noted Otherwise

All Lumber 4x6, 6x6 and Smaller to be DF #2 UNO
All Lumber 4x8, 6x8 and Larger to be DF #1 UNO

Roof sheathing to be 1/2" plywood or OSB PI 24/0, nailed w/ 10d commons at 6", 6", 12"

All Walls to have Continuous Double Top Plates, All Splices to be per Detail **7/S-1.1**

Roof Rafters -- 2x10 D.F. #2 @ 24" oc in Simpson LUS Hangers, Typ. (UNO)

Roof Rafters -- 2x8 D.F. #2 @ 24" oc in Simpson LUS Hangers, Typ. (UNO)

Ceiling Joists -- 2x8 D.F. #2 @ 24" oc in Simpson LUS Hangers. (UNO)

Denotes Step in Framing. Step Ht. & Extent per Arch.

Waterproofing, flashing, & finish details per Architecturals.

See General Notes & Specifications for additional requirements and material specifications.

All dimensions per Architectural plans

Contractor to VERIFY all dimensions w/ Architectural plans PRIOR to commencement of construction.

HOLDOWN SCHEDULE

TYPE	HOLDOWN[1] OPTION	ALTERNATE[2] OPTION	MIN. POST	ANCHOR / EMBEDMENT	TYPICAL DETAILS
A	CS14	HDU4	(2) 2x	N/A	Strap Holdown: 3/S-3.2, UNO Holdown Btwn Floors: 4/S-3.2, UNO
B	CMSTC16	HDU4	(2) 2x	N/A	
C	CMST14	HDU8	4x6	N/A	
D	CMST12	HDU11	4x6	N/A	
1	HDU4	CMSTC16	(2) 2x	Per Detail	Holdown at (E) Fdn.: 17/S-3.2, UNO Holdown at (N) Fdn.: 15, 16/S-3.1, UNO
2	HDU8	CMSTC16	4x6	Per Detail	
3	HDU11	CMST12	6x6	Per Detail	
4	HDU14	--	6x6	Per Detail	
5	HD19	--	6x8	Per Detail	

FOOTNOTES:
1. Shared holdowns to be installed per detail **10/S-1.1**, *Typical Shearwall Intersections*, (UNO)
2. All Connections to Foundations, Wood Beams, & Steel Beams must be Holdown Hardware, Straps are *not* Permitted in these instances.

SHEARWALL SCHEDULE

DESCRIPTION					NAILING[1]		TRANSFERS[2]				
NO.	MATERIALS	DBL SIDED	SILL PLATE	PANEL B'DRY	SIZE	SPC'G	5/8"Ø[3] AB	SDS[4] Screw	A35, LTP4[5,6,7] or LTP5	RBC	16d[8]
6	15/32" CDX Plywood	N	2x	2x	10d	6"	48"	10"	20"	13"	5"
4	15/32" CDX Plywood	N	2x	3x	10d	4"	38"	7"	13"	9"	3"
3	15/32" CDX Plywood	N	2x	3x	10d	3"	29"	5"[9]	10"	7"	-
2	15/32" CDX Plywood	N	2x	3x	10d	2"	23"	4"[9]	8"	5"	-
44	15/32" CDX Plywood	Y	3x	3x	10d	4"	24"	3"[9]	6"	-	-
33	15/32" CDX Plywood	Y	3x	3x	10d	3"	18"	2"[9,10]	5"	-	-

FOOTNOTES:
1. All nails to be COMMONS. **DO NOT** use box type nails. All "field" nailing to be 12" oc, UNO.
2. All transfers to be installed into min. 1-1/2" thick members, UNO. Where clips are spaced less than 6" oc, stagger clips on each side of wall.
3. All shear walls to have 5/8" anchor bolts, embeded 7" into concrete foundations, with .3"x3"x0.229" thick plate washers, minimum. Washers may be slotted (slot length not to exceed 1-3/4") w/ standard cut washer placed between nut and plate washer. Washers shall extend within 1/2" of the edge of the bottom plate on the sheathed side. At walls sheathed on 2 sides, plate washers shall be alternated to each side of plate. [Governing Building Code, Section 2308.3.2] [AF&PA SDPWS 4.3.6.4.3]
4. Simpson SDS 1/4"x4-1/2" Screws through 2x sill, or SDS 1/4"x6" Screws through 3x sill or double plates. Install into minimum 1-3/4" thick members (rim and/or blocking). [ICC ESR 2236]
5. See details for permitted transfer clip types and locations.
6. Orient LTP4 and LTP5 clips such that the long dimension is horizontal.
7. Where LTP4 clips are installed over shear wall sheathing, fasten with full length 8d common nails.
8. 16d common nails through the sill plate to rim member or blocking.
9. Install screws into 3-1/2" wide continuous member, staggered 1-1/2" apart.
10. Install screws into Glulams or solid sawn member. LSL, LVL, or PSL members are NOT acceptable, UNO.

Ashley&Vance ENGINEERING, INC.
210 East Cota Street
Santa Barbara, CA 93101
(805) 962-9966
www.ashleyvance.com
CIVIL • STRUCTURAL

The use of these plans and specifications shall be restricted to the original site for which they were prepared and publication thereof is expressly limited to such use. Reproduction or publication by any method, in whole or in part, is prohibited. Title to these plans and specifications remain with Ashley & Vance Engineering, Inc. without prejudice. Visual contact with these plans and specifications shall constitute prima facie evidence of the acceptance of these restrictions.

Engineer of Record:

REGISTERED PROFESSIONAL ENGINEER CRAIG W. PRUETT C 77909 CIVIL STATE OF CALIFORNIA

PLAN REVIEW SET NOT FOR CONSTRUCTION

Block Residence

1790 Sycamore Canyon Road
Santa Barbara, CA 93108

Revision:

Proj. Engr.: R. Gabriel Phone Ext.: 131

Proj. Mngr.: C. Pruett

Date: 9 Oct. 2019 Scale: 1/4"=1'-0"

A&V Job No.: 181380

ROOF FRAMING PLAN

S-2.3

DO NOT SCALE THESE DRAWINGS. Refer to Architectural plans for all dimensions.

Oct 9, 2019
2:21:05 PM

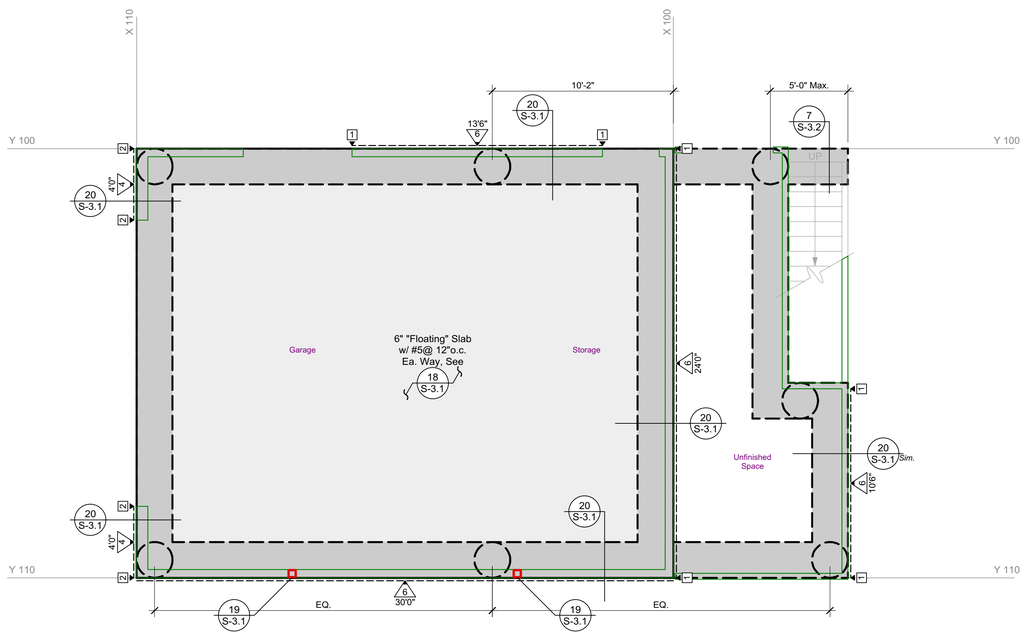

GENERAL FOUNDATION SCHEDULE

(N) Foundation per Details

24" Wide x 24" Embedment (UNO)

(N) "Floating" Slab per Plan & Details

Denotes Step in Slab-on-Grade Step Ht. & Extent per Arch.

Wood Framed Wall Above (See S-2.5)

Pile Per Plan and Detail **12/S-3.1**
Piles are Type A per Pile Sched., UNO

GENERAL FOUNDATION NOTES

Please see Soils Report for additional specifications and recommendations. It is the contractor's responsibility to obtain a copy of the soils report from the owner or owners representative.

Prior to the contractor requesting a Building Department foundation inspection, the Soils Engineer shall advise the building inspector in writing that:

a) Building pad was prepared in accordance with soils report

b) Utility trenches have been properly backfilled and compacted, and

c) Foundation excavations, the soil's expansive characteristics and bearing capacity conform to the soils report.

See General Notes & Specifications for additional requirements and material specifications.

All dimensions per Architectural plans

Contractor to VERIFY all dimensions w/ Architectural plans PRIOR to commencement of construction.

Contractor shall verify all existing conditions prior to construction & contact Engineer and Architect regarding any discrepancies.

PILE SCHEDULE

ID[1]	Diameter	Reinforcing		Pile Depth	
		Spiral Ties	Vertical Reinf.	Depth "E", Min.	Total Depth "D" Min.
A	24"	#4 @ 2½"o.c.	(11) #6 Cont.	12'-0"	22'-0"
B	24"	#4 @ 2½"o.c.	(11) #6 Cont.	19'-0"	29'-0"

FOOTNOTES:
1. Piles are Type A Unless Noted Otherwise
2. f'_c per Concrete Strength schedule
3. For typical pile detail refer to **12/S-3.1**.

HOLDOWN SCHEDULE

TYPE	HOLDOWN[1] OPTION	ALTERNATE[2] OPTION	MIN. POST	ANCHOR / EMBEDMENT	TYPICAL DETAILS
A	CS14	HDU4	(2) 2x	N/A	Strap Holdown: 3/S-3.2, UNO Holdown Btwn Floors: 4/S-3.2, UNO
B	CMSTC16	HDU4	(2) 2x	N/A	
C	CMST14	HDU8	4x6	N/A	
D	CMST12	HDU11	4x6	N/A	
1	HDU4	CMSTC16	(2) 2x	Per Detail	Holdown at (E) Fdn.: 17/S-3.2, UNO Holdown at (N) Fdn.: 15, 16/S-3.1, UNO
2	HDU8	CMSTC16	4x6	Per Detail	
3	HDU11	CMST12	6x6	Per Detail	
4	HDU14	--	6x6	Per Detail	
5	HD19	--	6x8	Per Detail	

FOOTNOTES:
1. Shared holdowns to be installed per detail **10/S-1.1**, *Typical Shearwall Intersections*, (UNO)
2. All Connections to Foundations, Wood Beams, & Steel Beams must be Holdown Hardware, Straps are *not* Permitted in these instances.

SHEARWALL SCHEDULE

DESCRIPTION					NAILING[1]		TRANSFERS[2]				
NO.	MATERIALS	DBL. SIDED	SILL PLATE	PANEL B'DRY	SIZE	SPC'G	5/8"Ø[3] AB	SDS[4] Screw	A35, LTP4,[5,6,7] or LTP5	RBC	16d[8]
6	15/32" CDX Plywood	N	2x	2x	10d	6"	48"	10"	20"	13"	5"
4	15/32" CDX Plywood	N	2x	3x	10d	4"	38"	7"	13"	9"	3"
3	15/32" CDX Plywood	N	2x	3x	10d	3"	29"	5"[9]	10"	7"	-
2	15/32" CDX Plywood	N	2x	3x	10d	2"	23"	4"[9]	8"	5"	-
44	15/32" CDX Plywood	Y	3x	3x	10d	4"	24"	3"[9]	6"	-	-
33	15/32" CDX Plywood	Y	3x	3x	10d	3"	18"	2"[9,10]	5"	-	-

FOOTNOTES:
1. All nails to be COMMONS. **DO NOT** use box type nails. All "field" nailing to be 12" oc, UNO.
2. All transfers to be installed into min. 1-1/2" thick members, UNO. Where clips are spaced less than 6" oc, stagger clips on each side of wall.
3. All shear walls to have 5/8" anchor bolts, embeded 7" into concrete foundations, with 3"x3"x0.229" thick plate washers, minimum. Washers may be slotted (slot length not to exceed 1-3/4") w/ standard cut washer placed between nut and plate washer. Washers shall extend within 1/2" of the edge of the bottom plate on the sheathed side. At walls sheathed on 2 sides, plate washers shall be alternated to each side of plate. [Governing Bulding Code, Section 2308.3.2] [AF&PA SDPWS 4.3.6.4.3]
4. Simpson SDS 1/4"x4-1/2" Screws through 2x sill, or SDS 1/4"x6" Screws through 3x sill or double plates. Install into minimum 1-3/4" thick members (rim and/or blocking). [ICC ESR 2236]
5. See details for permitted transfer clip types and locations.
6. Orient LTP4 clips and LTP5 clips such that the long dimension is horizontal.
7. Where LTP4 clips are installed over shear wall sheathing, fasten with full length 8d common nails.
8. 16d common nails through the sill plate to rim member or blocking.
9. Install screws into 3-1/2" wide continuous member, staggered 1-1/2" apart.
10. Install screws into Glulams or solid sawn member. LSL, LVL, or PSL members are NOT acceptable, UNO.

N

TYPICAL PILE & GRADE BEAM DETAILS

Typical Detail	Detail Reference
Typical Pile	12/S-3.1
Typical Grade Beam	2/S-3.1
Grade Beam Intersections	16/S-3.1
Grade Beam to Pile	10/S-3.1
Grade Beam to Existing Foundation	8/S-3.1

Ashley&Vance ENGINEERING, INC.
210 East Cota Street
Santa Barbara, CA 93101
(805) 962-9966
www.ashleyvance.com
CIVIL • STRUCTURAL

The use of these plans and specifications shall be restricted to the original site for which they were prepared and publication thereof is expressly limited to such use. Reproduction or publication by any method, in whole or in part, is prohibited. Title to these plans and specifications remain with Ashley & Vance Engineering, Inc. without prejudice. Visual contact with these plans and specifications shall constitute prima facie evidence of the acceptance of these restrictions.

Engineer of Record:

REGISTERED PROFESSIONAL ENGINEER
CHAD W. PRUETT
C 77909
CIVIL
STATE OF CALIFORNIA

PLAN REVIEW SET
NOT FOR CONSTRUCTION

Block Residence

1790 Sycamore Canyon Road
Santa Barbara, CA 93108

Revision:

Proj. Engr.: R. Gabriel Phone Ext.: 131

Proj. Mngr.: C. Pruett

Date: 9 Oct. 2019 Scale: 1/4"=1'-0"

A&V Job No.: 181380

GARAGE FOUNDATION PLAN

S-2.4

DO NOT SCALE THESE DRAWINGS. Refer to Architectural plans for all dimensions.

Oct 9, 2019
2:21:08 PM

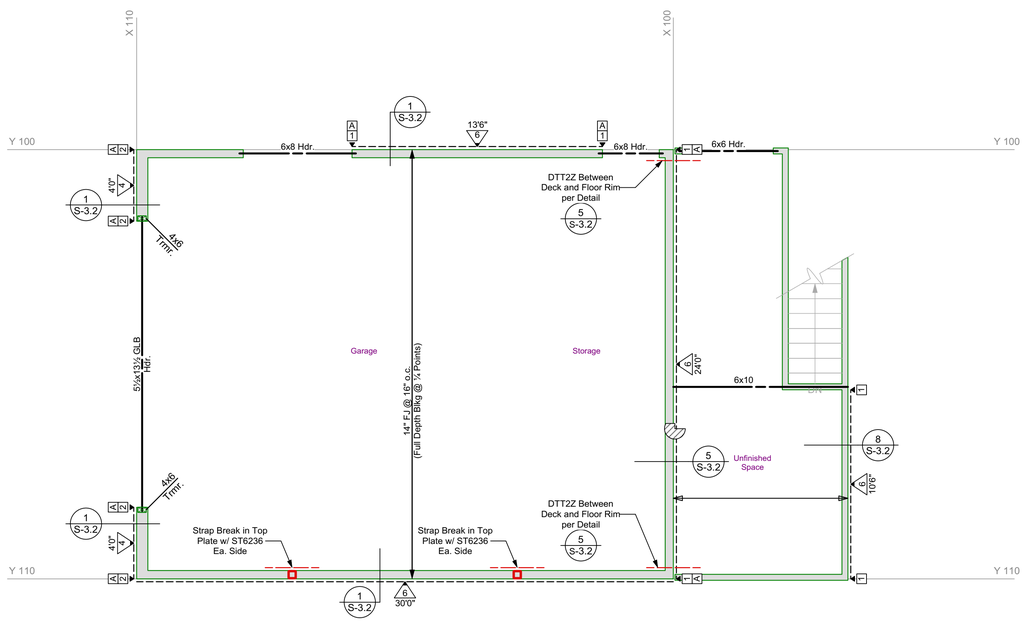

WALL SCHEDULE

Stud wall locations per Architecturals.

Wood-Framed Wall, Thk. per Arch.

2x4 D.F. Stud @ 16" oc, Min.

GENERAL FRAMING NOTES

Beams (per Call-out)

All Beams to Bear on Plates w/ Indicated
Post or Doubler Below Unless Noted Otherwise

All Lumber 4x6, 6x6 and Smaller to be DF #2 UNO
All Lumber 4x8, 6x8 and Larger to be DF #1 UNO

Floor sheathing to be 3/4" plywood or OSB, T & G, PI 40/20, glued and nailed w/ 10d commons at 6", 6", 12"

All Walls to have Continuous Double Top Plates,
All Splices to be per Detail **7/S-1.1**

Floor Joists -- 14" TJI 560 @ 16" oc
in Simpson ITS Hangers, Typ. (UNO)

Deck Joists -- 2x10 D.F. #2 @ 16" oc
in Simpson LUS Hangers, Typ. (UNO)

Denotes Step in Framing.
Step Ht. & Extent per Arch.

Waterproofing, flashing, & finish details per Architecturals.

See General Notes & Specifications for additional requirements and material specifications.

All dimensions per Architectural plans

Contractor to VERIFY all dimensions w/ Architectural plans PRIOR to commencement of construction.

HOLDOWN SCHEDULE

TYPE	HOLDOWN[1] OPTION	ALTERNATE[2] OPTION	MIN. POST	ANCHOR / EMBEDMENT	TYPICAL DETAILS
A	CS14	HDU4	(2) 2x	N/A	Strap Holdown: 3/S-3.2, UNO Holdown Btwn Floors: 4/S-3.2, UNO
B	CMSTC16	HDU4	(2) 2x	N/A	
C	CMST14	HDU8	4x6	N/A	
D	CMST12	HDU11	4x6	N/A	
1	HDU4	CMSTC16	(2) 2x	Per Detail	Holdown at (E) Fdn.: 17/S-3.2, UNO Holdown at (N) Fdn.: 15, 16/S-3.1, UNO
2	HDU8	CMSTC16	4x6	Per Detail	
3	HDU11	CMST12	6x6	Per Detail	
4	HDU14	--	6x6	Per Detail	
5	HD19	--	6x8	Per Detail	

FOOTNOTES:
1. Shared holdowns to be installed per detail **10/S-1.1**, *Typical Shearwall Intersections*, (UNO)
2. All Connections to Foundations, Wood Beams, & Steel Beams must be Holdown Hardware, Straps are *not* Permitted in these instances.

SHEARWALL SCHEDULE

DESCRIPTION					NAILING[1]		TRANSFERS[2]				
NO.	MATERIALS	DBL. SIDED	SILL PLATE	PANEL B'DRY	SIZE	SPC'G	5/8"Ø[3] AB	SDS[4] Screw	A35, LTP4,[5,6,7] or LTP5	RBC	16d[8]
6	15/32" CDX Plywood	N	2x	2x	10d	6"	48"	10"	20"	13"	5"
4	15/32" CDX Plywood	N	2x	3x	10d	4"	38"	7"	13"	9"	3"
3	15/32" CDX Plywood	N	2x	3x	10d	3"	29"	5"[9]	10"	7"	-
2	15/32" CDX Plywood	N	2x	3x	10d	2"	23"	4"[9]	8"	5"	-
44	15/32" CDX Plywood	Y	3x	3x	10d	4"	24"	3"[9]	6"	-	-
33	15/32" CDX Plywood	Y	3x	3x	10d	3"	18"	2"[9,10]	5"	-	-

FOOTNOTES:
1. All nails to be COMMONS. **DO NOT** use box type nails. All "field" nailing to be 12" oc, UNO.
2. All transfers to be installed into min. 1-1/2" thick members, UNO. Where clips are spaced less than 6" oc, stagger clips on each side of wall.
3. All shear walls to have 5/8" anchor bolts, embeded 7" into concrete foundations, with 3"x3"x0.229" thick plate washers, minimum. Washers may be slotted (slot length not to exceed 1-3/4") w/ standard cut washer placed between nut and plate washer. Washers shall extend within 1/2" of the edge of the bottom plate on the sheathed side. At walls sheathed on 2 sides, plate washers shall be alternated to each side of plate. [Governing Building Code, Section 2308.3.2] [AF&PA SDPWS 4.3.6.4.3]
4. Simpson SDS 1/4"x4-1/2" Screws through 2x sill, or SDS 1/4"x6" Screws through 3x sill or double plates. Install into minimum 1-3/4" thick members (rim and/or blocking). [ICC ESR 2236]
5. See details for permitted transfer clip types and locations.
6. Orient LTP4 and LTP5 clips such that the long dimension is horizontal.
7. Where LTP4 clips are installed over shear wall sheathing, fasten with full length 8d common nails.
8. 16d common nails through the sill plate to rim member or blocking.
9. Install screws into 3-1/2" wide continuous member, staggered 1-1/2" apart.
10. Install screws into Glulams or solid sawn member. LSL, LVL, or PSL members are NOT acceptable, UNO.

Ashley&Vance ENGINEERING, INC.
210 East Cota Street
Santa Barbara, CA 93101
(805) 962-9966
www.ashleyvance.com
CIVIL • STRUCTURAL

The use of these plans and specifications shall be restricted to the original site for which they were prepared and publication thereof is expressly limited to such use. Reproduction or publication by any method, in whole or in part, is prohibited. Title to these plans and specifications remain with Ashley & Vance Engineering, Inc. without prejudice. Visual contact with these plans and specifications shall constitute prima facie evidence of the acceptance of these restrictions.

Engineer of Record:

REGISTERED PROFESSIONAL ENGINEER
CHAD W. PRUETT
C 77909
CIVIL
STATE OF CALIFORNIA

PLAN REVIEW SET
NOT FOR CONSTRUCTION

Block Residence
1790 Sycamore Canyon Road
Santa Barbara, CA 93108

Revision:

Proj. Engr.: R. Gabriel Phone Ext.: 131
Proj. Mngr.: C. Pruett
Date: 9 Oct. 2019 Scale: 1/4"=1'-0"
A&V Job No.: 181380

GARAGE
FLOOR FRAMING
PLAN

S-2.5

DO NOT SCALE THESE DRAWINGS. Refer to Architectural plans for all dimensions.

Oct 9, 2019
2:21:05 PM

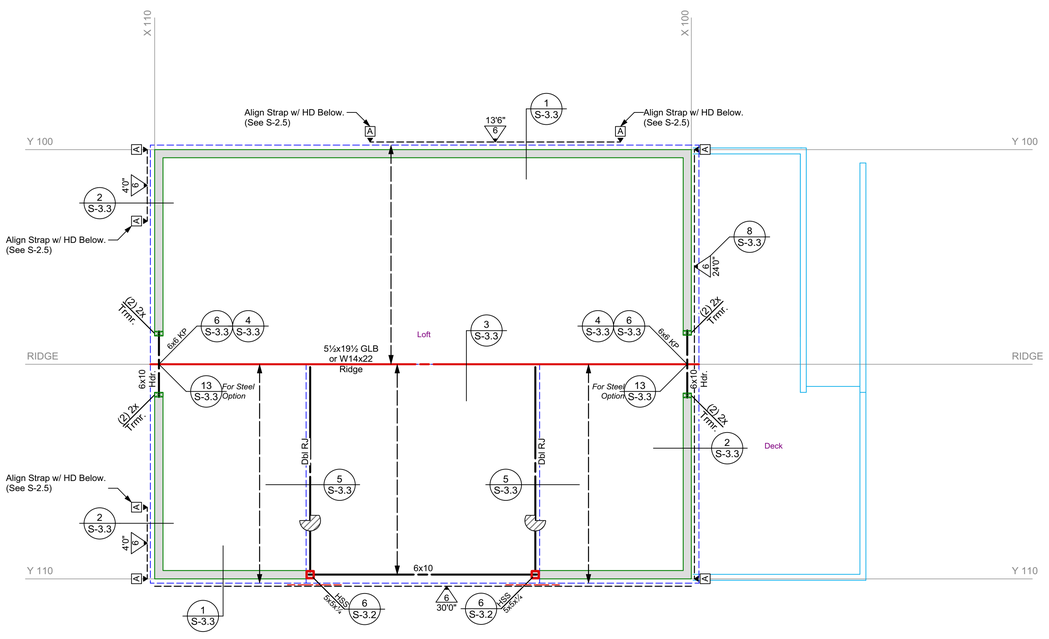

GENERAL FRAMING NOTES

Beams (per Call-out)

All Beams to Bear on Plates w/ Indicated Post or Doubler Below Unless Noted Otherwise

All Lumber 4x6, 6x6 and Smaller to be DF #2 UNO
All Lumber 4x8, 6x8 and Larger to be DF #1 UNO

Roof sheathing to be 1/2" plywood or OSB PI 24/0, nailed w/ 10d commons at 6", 6", 12"

All Walls to have Continuous Double Top Plates, All Splices to be per Detail **7/S-1.1**

Roof Rafters -- 2x8 D.F. #2 @ 24" oc in Simpson LUS Hangers, Typ. (UNO)

Waterproofing, flashing, & finish details per Architecturals.

See General Notes & Specifications for additional requirements and material specifications.

All dimensions per Architectural plans

Contractor to VERIFY all dimensions w/ Architectural plans PRIOR to commencement of construction.

HOLDOWN SCHEDULE

TYPE	HOLDOWN[1] OPTION	ALTERNATE[2] OPTION	MIN. POST	ANCHOR / EMBEDMENT	TYPICAL DETAILS
A	CS14	HDU4	(2) 2x	N/A	Strap Holdown: 3/S-3.2, UNO Holdown Btwn Floors: 4/S-3.2, UNO
B	CMSTC16	HDU4	(2) 2x	N/A	
C	CMST14	HDU8	4x6	N/A	
D	CMST12	HDU11	4x6	N/A	
1	HDU4	CMSTC16	(2) 2x	Per Detail	Holdown at (E) Fdn.: 17/S-3.2, UNO Holdown at (N) Fdn.: 15, 16/S-3.1, UNO
2	HDU8	CMSTC16	4x6	Per Detail	
3	HDU11	CMST12	6x6	Per Detail	
4	HDU14	--	6x6	Per Detail	
5	HD19	--	6x8	Per Detail	

FOOTNOTES:
1. Shared holdowns to be installed per detail **10/S-1.1**, *Typical Shearwall Intersections*, (UNO)
2. All Connections to Foundations, Wood Beams, & Steel Beams must be Holdown Hardware, Straps are *not* Permitted in these instances.

SHEARWALL SCHEDULE

DESCRIPTION					NAILING[1]		TRANSFERS[2]				
NO.	MATERIALS	DBL SIDED	SILL PLATE	PANEL B'DRY	SIZE	SPC'G	5/8"Ø[3] AB	SDS[4] Screw	A35, LTP4[5,6,7] or LTP5	RBC	16d[8]
6	15/32" CDX Plywood	N	2x	2x	10d	6"	48"	10"	20"	13"	5"
4	15/32" CDX Plywood	N	2x	3x	10d	4"	38"	7"	13"	9"	3"
3	15/32" CDX Plywood	N	2x	3x	10d	3"	29"	5"[9]	10"	7"	-
2	15/32" CDX Plywood	N	2x	3x	10d	2"	23"	4"[9]	8"	5"	-
44	15/32" CDX Plywood	Y	3x	3x	10d	4"	24"	3"[9]	6"	-	-
33	15/32" CDX Plywood	Y	3x	3x	10d	3"	18"	2"[9,10]	5"	-	-

FOOTNOTES:
1. All nails to be COMMONS. **DO NOT** use box type nails. All "field" nailing to be 12" oc, UNO.
2. All transfers to be installed into min. 1-1/2" thick members, UNO. Where clips are spaced less than 6" oc, stagger clips on each side of wall.
3. All shear walls to have 5/8" anchor bolts, embeded 7" into concrete foundations, with 3"x3"x0.229" thick plate washers, minimum. Washers may be slotted (slot length not to exceed 1-3/4") w/ standard cut washer placed between nut and plate washer. Washers shall extend within 1/2" of the edge of the bottom plate on the sheathed side. At walls sheathed on 2 sides, plate washers shall be alternated to each side of plate. [Governing Building Code, Section 2308.3.2] [AF&PA SDPWS 4.3.6,4.3]
4. Simpson SDS 1/4"x4-1/2" Screws through 2x sill, or SDS 1/4"x6" Screws through 3x sill or double plates. Install into minimum 1-3/4" thick members (rim and/or blocking). [ICC ESR 2236]
5. See details for permitted transfer clip types and locations.
6. Orient LTP4 and LTP5 clips such that the long dimension is horizontal.
7. Where LTP4 clips are installed over shear wall sheathing, fasten with full length 8d common nails.
8. 16d common nails through the sill plate to rim member or blocking.
9. Install screws into 3-1/2" wide continuous member, staggered 1-1/2" apart.
10. Install screws into Glulams or solid sawn member. LSL, LVL, or PSL members are NOT acceptable, UNO.

Ashley&Vance ENGINEERING, INC.
210 East Cota Street
Santa Barbara, CA 93101
(805) 962-9966
www.ashleyvance.com
CIVIL • STRUCTURAL

The use of these plans and specifications shall be restricted to the original site for which they were prepared and publication thereof is expressly limited to such use. Reproduction or publication by any method, in whole or in part, is prohibited. Title to these plans and specifications remain with Ashley & Vance Engineering, Inc. without prejudice. Visual contact with these plans and specifications shall constitute prima facie evidence of the acceptance of these restrictions.

Engineer of Record:

REGISTERED PROFESSIONAL ENGINEER CHAD W. PRUETT C 77909 CIVIL STATE OF CALIFORNIA

PLAN REVIEW SET
NOT FOR CONSTRUCTION

Block Residence
1790 Sycamore Canyon Road
Santa Barbara, CA 93108

Revision:

Proj. Engr.: R. Gabriel Phone Ext.: 131
Proj. Mngr.: C. Pruett
Date: 9 Oct. 2019 Scale: 1/4"=1'-0"
A&V Job No.: 181380

GARAGE ROOF FRAMING PLAN

S-2.6

DO NOT SCALE THESE DRAWINGS. Refer to Architectural plans for all dimensions.

Oct 9, 2019
2:21:06 PM

Install holdowns in existing footings with threaded rod and embed in epoxy. Special inspection is required. Pull test 100% of anchors installed in existing footing to the loads indicated below. Per ESR 2508, pull test loads are based on the minimum of 0.67 x adhesive bond strength or 0.8 x anchor strength

Anchor Rod Schedule

Holdown	Rod Ø	Le	Test Load
HDU4	5/8"	14"	6,500 lbs
HDU8	7/8"	18"	13,300 lbs

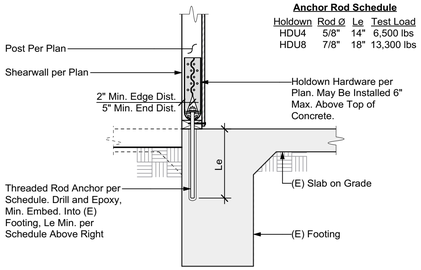

17 HOLDOWN AT EXISTING FOOTING

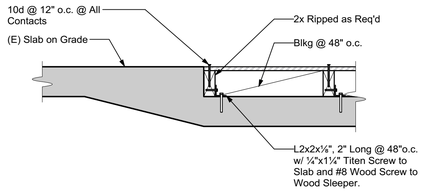

13 STEP IN SLAB

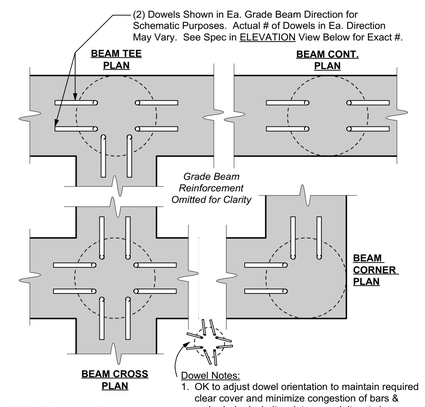

Dowel Notes:
1. OK to adjust dowel orientation to maintain required clear cover and minimize congestion of bars & embeds (rods, bolts, plates, conduits, etc.).
2. Dowels to be tied in place prior to placing concrete (no wet-setting allowed).
3. Field-bending of dowels is not permitted.

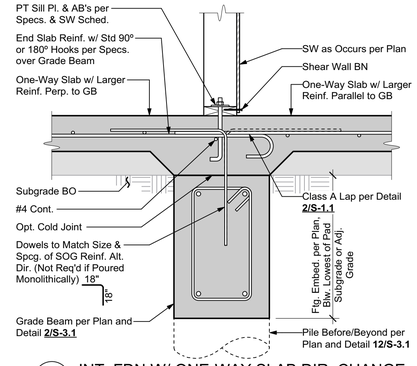

5 INT. FDN W/ ONE-WAY SLAB DIR. CHANGE

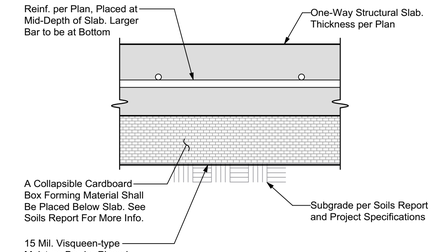

1 TYP. ONE-WAY STRUCTURAL SLAB

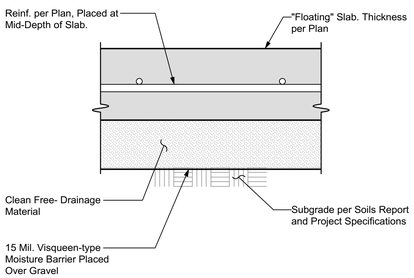

18 TYPICAL SLAB ON GRADE

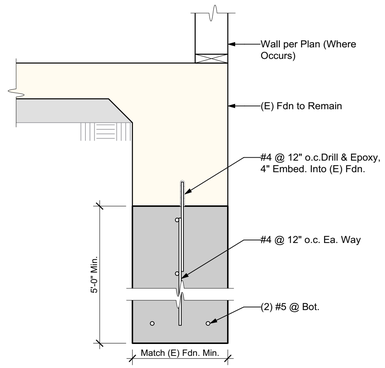

14 DEEPENED FOUNDATION

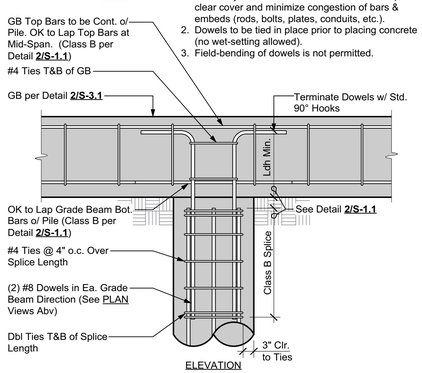

10 TYP. GRADE BEAM TO PILE

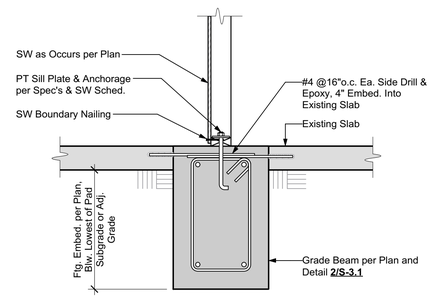

6 NEW FOOTING IN EXISTING SLAB

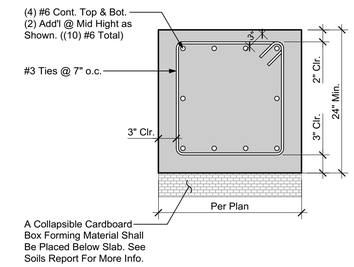

2 TYP. GRADE BEAM

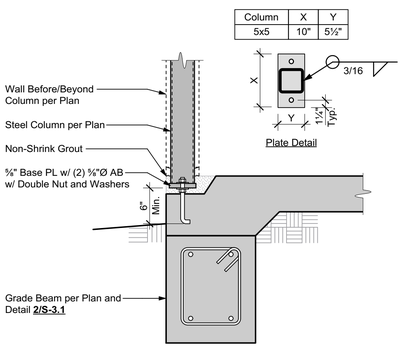

19 STEEL COLUMN ON FOUNDATION

Anchor Rod Schedule

Holdown	Anchor Rod:
HDU4	SSTB24
HDU8	SSTB28L
HDU11	SB1x30
HDU14	SB1x30
HD19**	1¼"Ø ATR

**HD19 Requires 30" Rod Embedment from Top of Slab w/ 3x3x⅜" Plate Washer and Dbl. Nut

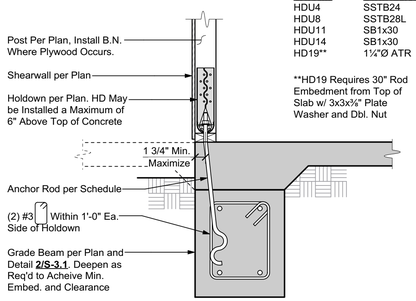

15 HOLDOWN AT NEW FOOTING

All Excavations to be Inspected and Approved by the Project Soils Engineer

f'c per Concrete Material Specifications. (Special Inspection Requirements per Specs.) All Rebar to be 60 ksi

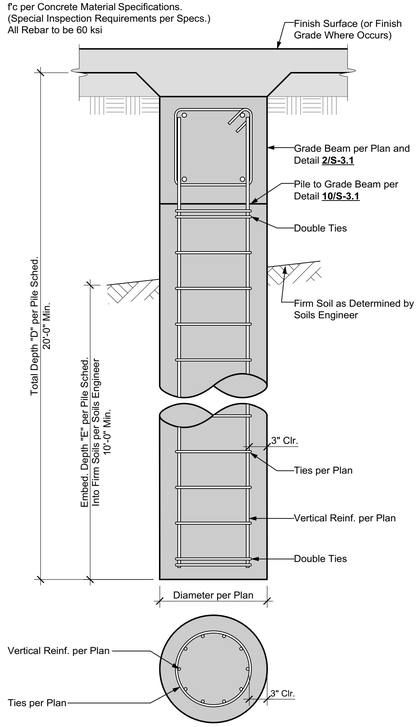

12 TYPICAL PILE

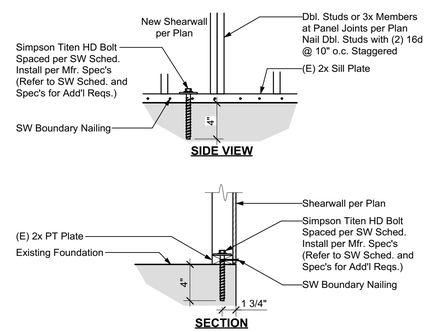

7 SHEAR TO EXISTING SILL PLATE

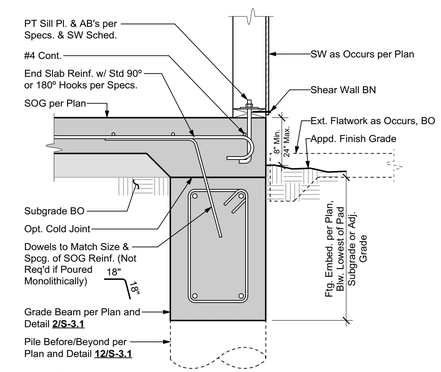

3 TYPICAL EXTERIOR FOUNDATION

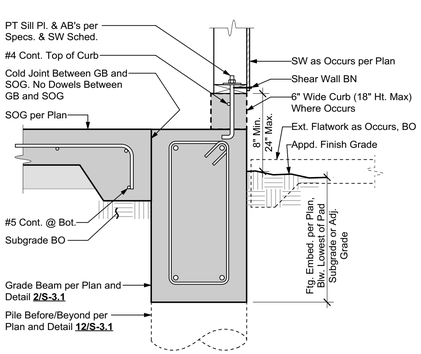

20 TYP. EXTERIOR FDN. AT GARAGE

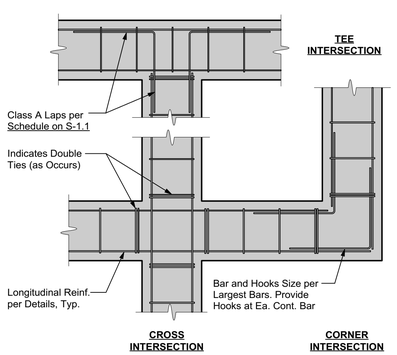

16 TYP. FOUNDATION INTERSECTIONS

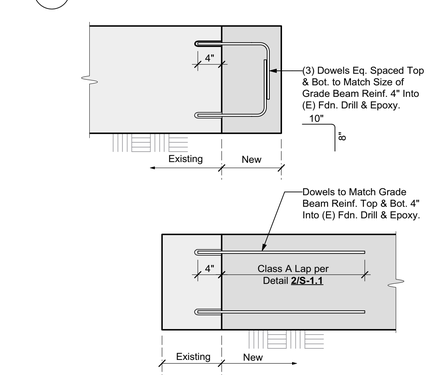

8 NEW FDN. TO EXISTING FDN.

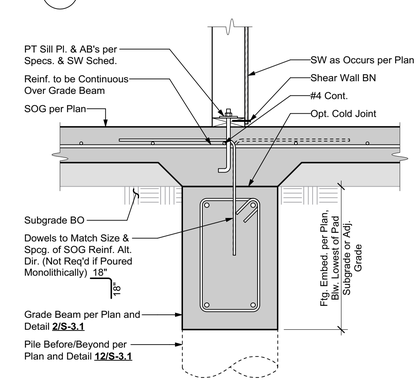

4 TYPICAL INTERIOR FOUNDATION

Ashley&Vance ENGINEERING, INC.
210 East Cota Street
Santa Barbara, CA 93101
(805) 962-9966
www.ashleyvance.com
CIVIL • STRUCTURAL

The use of these plans and specifications shall be restricted to the original site for which they were prepared and publication thereof is expressly limited to such use. Reproduction or publication by any method, in whole or in part, is prohibited. Title to these plans and specifications remain with Ashley & Vance Engineering, Inc. without prejudice. Visual contact with these plans and specifications shall constitute prima facie evidence of the acceptance of these restrictions.

Engineer of Record:

REGISTERED PROFESSIONAL ENGINEER CRAIG W. PRUETT C 77909 CIVIL STATE OF CALIFORNIA
PLAN REVIEW SET
NOT FOR CONSTRUCTION

Block Residence

1790 Sycamore Canyon Road
Santa Barbara, CA 93108

Revision:

Proj. Engr.: R. Gabriel	Phone Ext.: 131
Proj. Mngr.: C. Pruett	
Date: 9 Oct. 2019	Scale: NTS
A&V Job No.: 181380	

STRUCTURAL DETAILS

S-3.1

DO NOT SCALE THESE DRAWINGS. Refer to Architectural plans for all dimensions.

17 NOT USED

18 NOT USED

19 NOT USED

20 NOT USED

13 NOT USED

14 NOT USED

15 NOT USED

16 NOT USED

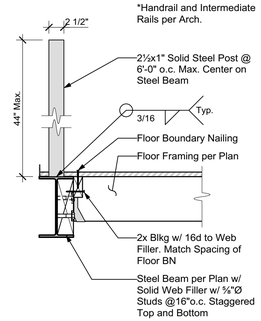

9 TYPICAL GUARDRAIL AT CATWALK

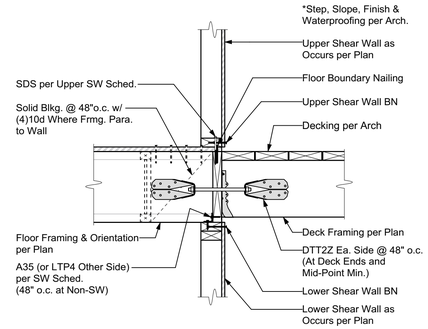

5 TRANSFER AT FLOOR/DECK STEP

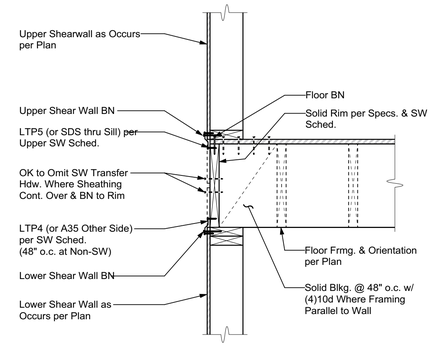

1 SHEAR TRANSFER: FLOOR AT EXT. WALL

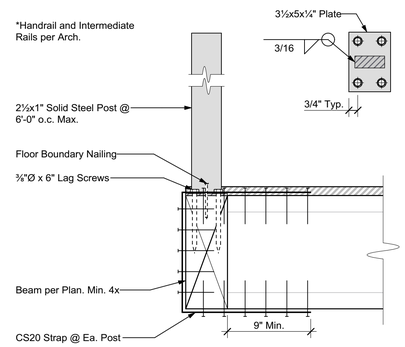

10 HAND RAIL CONNECTION

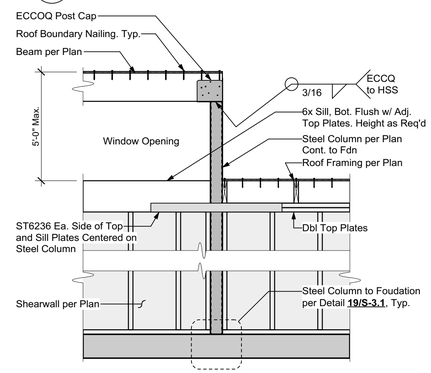

6 CANT. STEEL COLUMNS AT SHEARWALL

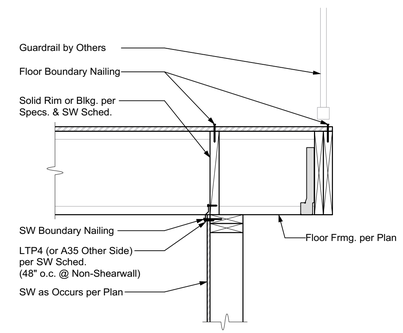

2 SHEAR TRANSFER: FLOOR AT INT. WALL

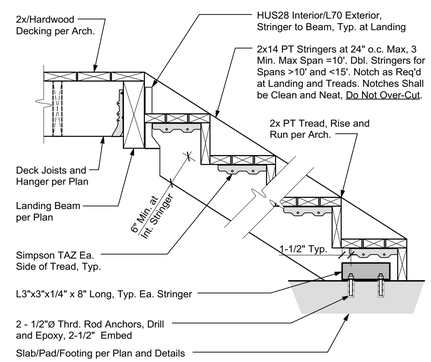

7 TYPICAL DECK STAIR

	Min. L	Nail Type
CS14	15"	10d
CMSTC16	20"	16d Sinker
CMST14	30"	10d
CMST12	39"	10d

NOTES:
1. All Straps by Simpson, See Catalogue for Additional Detail.
2. Use Minimum End Length Per Table Above UNO per Plan.
3. All Straps Fully Nailed into Post.

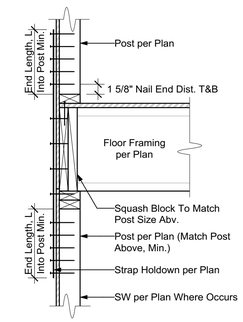

3 STRAP HOLDOWN TO BELOW

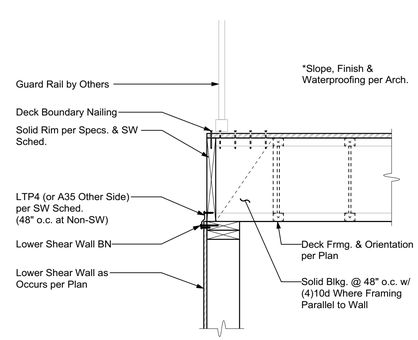

8 SHEAR TRANSFER: DECK AT EXT. WALL

Threaded Rod Schedule

Holdown	Threaded Rod Ø
HDU4	5/8"
HDU8	7/8"
HDU11	1"
HDU14	1"
HD19	1-1/4"

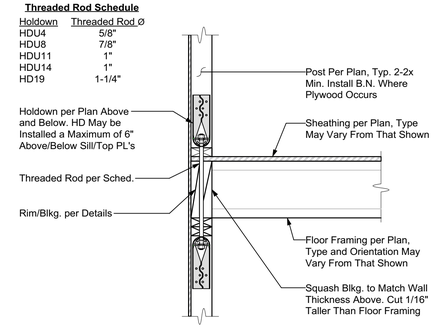

4 FLOOR-TO-FLOOR HOLDOWN

Ashley&Vance ENGINEERING, INC.
210 East Cota Street
Santa Barbara, CA 93101
(805) 962-9966
www.ashleyvance.com
CIVIL • STRUCTURAL

The use of these plans and specifications shall be restricted to the original site for which they were prepared and publication thereof is expressly limited to such use. Reproduction or publication by any method, in whole or in part, is prohibited. Title to these plans and specifications remain with Ashley & Vance Engineering, Inc. without prejudice. Visual contact with these plans and specifications shall constitute prima facie evidence of the acceptance of these restrictions.

Engineer of Record:

REGISTERED PROFESSIONAL ENGINEER CHAD W. PRUETT C 77909 CIVIL STATE OF CALIFORNIA

PLAN REVIEW SET
NOT FOR CONSTRUCTION

Block Residence

1790 Sycamore Canyon Road
Santa Barbara, CA 93108

Revision:

Proj. Engr.: R. Gabriel	Phone Ext.: 131
Proj. Mngr.: C. Pruett	
Date: 9 Oct. 2019	Scale: NTS
A&V Job No.: 181380	

STRUCTURAL DETAILS

S-3.2

DO NOT SCALE THESE DRAWINGS. Refer to Architectural plans for all dimensions.

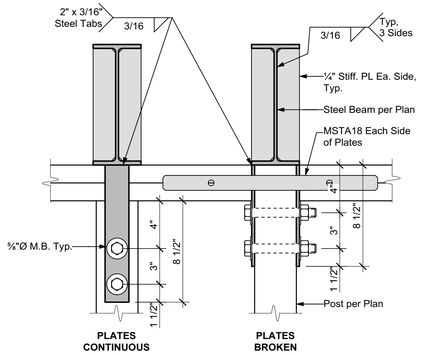

13 STEEL BEAM ON WOOD POST

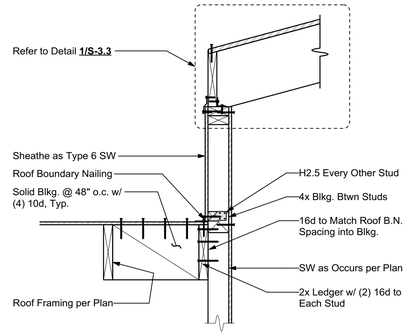

9 SHEAR TRANSFER: STEP IN ROOF

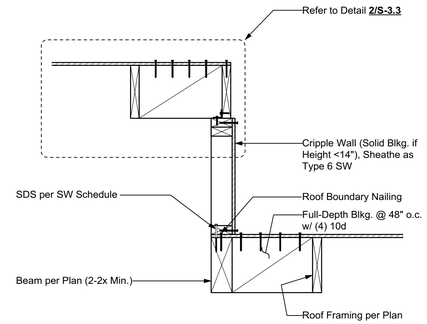

5 STEP IN ROOF DIAPHRAGM

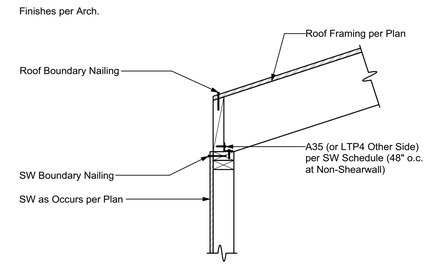

1 SHEAR TRANSFER: ROOF AT EXT. WALL

17 NOT USED

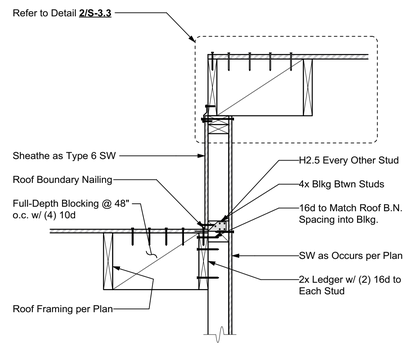

10 SHEAR TRANSFER: STEP IN ROOF

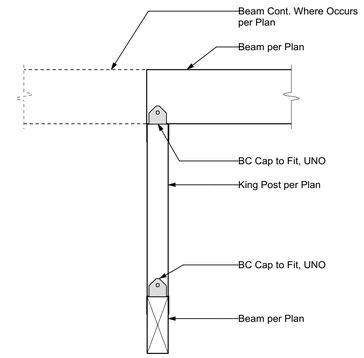

6 KING POST TO BEAM

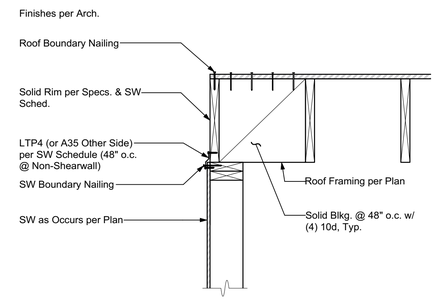

2 SHEAR TRANSFER: ROOF AT EXT. WALL

18 NOT USED

14 NOT USED

Strap	'N' 10d/16d	End Length
CS14	30 -	15 in.
CMST16	- 25	20 in.
CMST14	- 28	26 in.
CMST12	- 37	33 in.

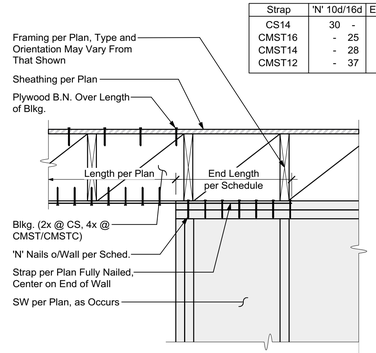

11 DRAG STRAP TO WALL

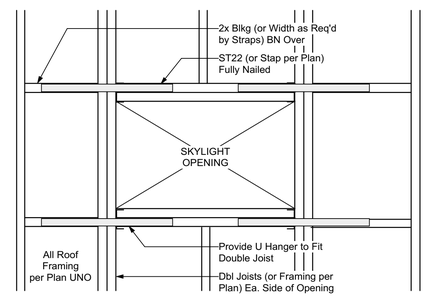

7 SKYLIGHT FRAMING

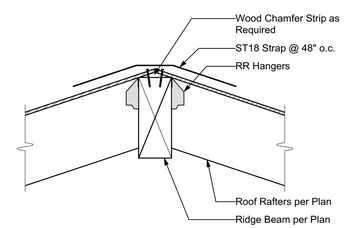

3 RAFTER TO RIDGE BEAM

19 NOT USED

15 NOT USED

Strap	'N' 10d/16d	End Length
CS14	30 -	15 in.
CMST16	- 25	20 in.
CMST14	- 28	26 in.
CMST12	- 37	33 in.

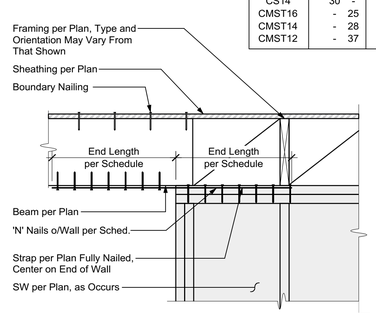

12 DRAG STRAP TO WALL

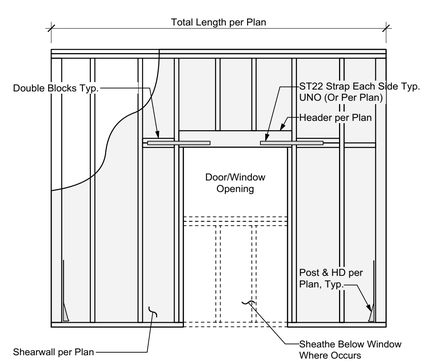

8 DOOR/WINDOW IN SHEARWALL

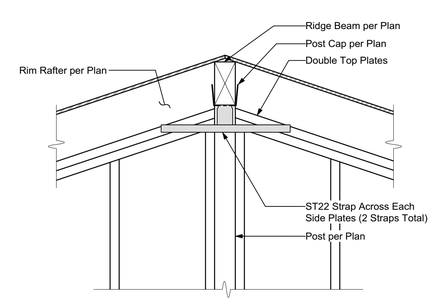

4 RIDGE BEAM TO WALL

20 NOT USED

16 NOT USED

Ashley&Vance ENGINEERING, INC.
210 East Cota Street
Santa Barbara, CA 93101
(805) 962-9966
www.ashleyvance.com
CIVIL • STRUCTURAL

The use of these plans and specifications shall be restricted to the original site for which they were prepared and publication thereof is expressly limited to such use. Reproduction or publication by any method, in whole or in part, is prohibited. Title to these plans and specifications remain with Ashley & Vance Engineering, Inc. without prejudice. Visual contact with these plans and specifications shall constitute prima facie evidence of the acceptance of these restrictions.

Engineer of Record:

REGISTERED PROFESSIONAL ENGINEER CHAD W. PRUETT C 77909 CIVIL STATE OF CALIFORNIA

PLAN REVIEW SET
NOT FOR CONSTRUCTION

Block Residence

1790 Sycamore Canyon Road
Santa Barbara, CA 93108

Revision:

Proj. Engr.: R. Gabriel	Phone Ext.: 131
Proj. Mngr.: C. Pruett	
Date: 9 Oct. 2019	Scale: NTS
A&V Job No.: 181380	

STRUCTURAL DETAILS

S-3.3

DO NOT SCALE THESE DRAWINGS. Refer to Architectural plans for all dimensions.