# 2520 BATH ST. REVISION TO PERMIT #BLD2018-02251

## PROJECT INFORMATION

OWNER:

PROJECT ADDRESS: 2520 BATH ST.
SANTA BARBARA, CA 93105

ARCHITECT: TOM OCHSNER ARCHITECT, AIA
10 EAST YANONALI STREET SUITE 2D
SANTA BARBARA, CA 93101
PHONE: (805) 770-7576
CELL: (805) 705-6558

## VICINITY MAP

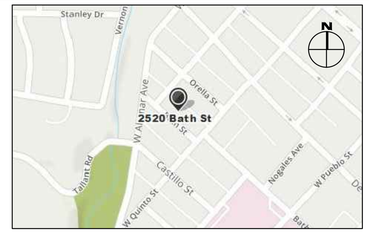


## SCOPE OF REVISION

REMOVAL OF 42" STUCCO WALL FROM SCOPE OF WORK AND PERMIT 36" AS BUILT STEEL FENCE AND GATE.

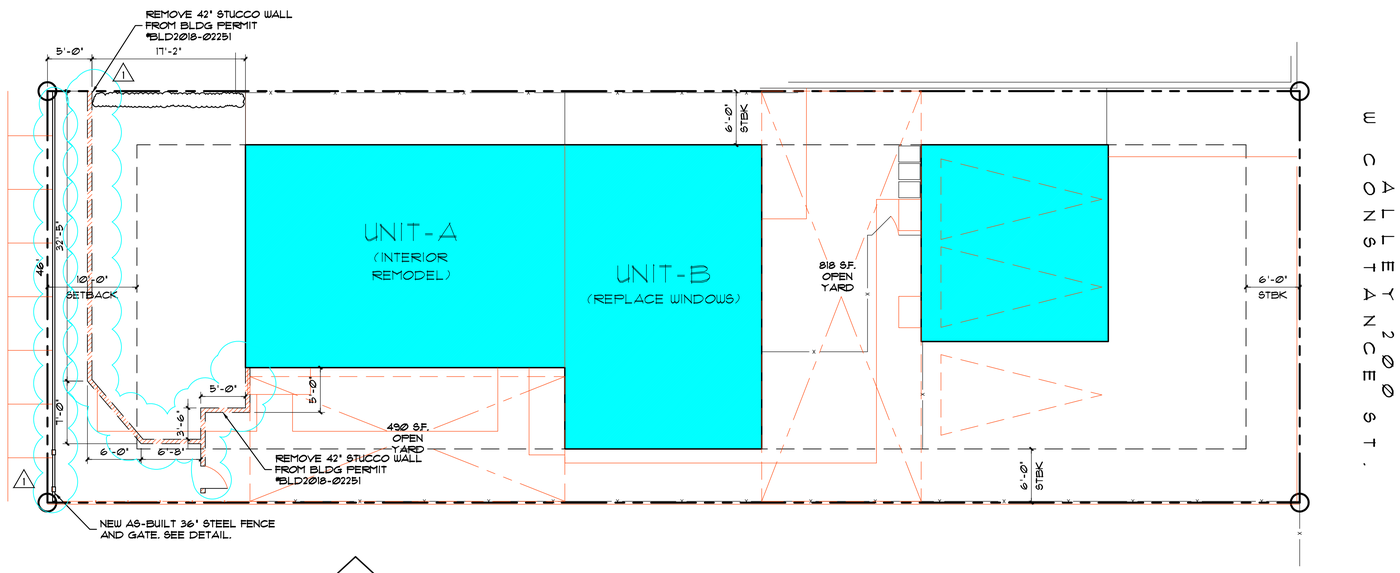


PROJECT NORTH

## SITE PLAN

SCALE: 1/8"=1'-0"

NOTE:
ALL DIMENSIONS TO THE EXISTING STRUCTURE ARE TO BE VERIFIED BY THE CONTRACTOR.

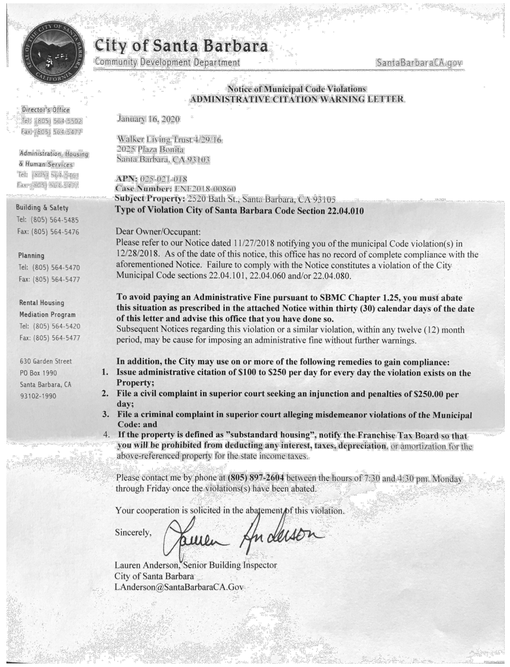

City of Santa Barbara
Community Development Department
SantaBarbaraCA.gov

Director's Office
Tel: (805) 564-5502
Fax: (805) 564-5477

Administration, Housing & Human Services
Tel: (805) 564-5460
Fax: (805) 564-5477

Building & Safety
Tel: (805) 564-5485
Fax: (805) 564-5476

Planning
Tel: (805) 564-5470
Fax: (805) 564-5477

Rental Housing Mediation Program
Tel: (805) 564-5420
Fax: (805) 564-5477

630 Garden Street
PO Box 1990
Santa Barbara, CA
93102-1990

**Notice of Municipal Code Violations**
**ADMINISTRATIVE CITATION WARNING LETTER**

January 16, 2020

Walker Living Trust 4/29/16
2025 Plaza Bonita
Santa Barbara, CA 93103

**APN:** 025-021-018
**Case Number:** ENE2018-00860
**Subject Property:** 2520 Bath St., Santa Barbara, CA 93105
**Type of Violation City of Santa Barbara Code Section 22.04.010**

Dear Owner/Occupant:
Please refer to our Notice dated 11/27/2018 notifying you of the municipal Code violation(s) in 12/28/2018. As of the date of this notice, this office has no record of complete compliance with the aforementioned Notice. Failure to comply with the Notice constitutes a violation of the City Municipal Code sections 22.04.101, 22.04.060 and/or 22.04.080.

**To avoid paying an Administrative Fine pursuant to SBMC Chapter 1.25, you must abate this situation as prescribed in the attached Notice within thirty (30) calendar days of the date of this letter and advise this office that you have done so.**
Subsequent Notices regarding this violation or a similar violation, within any twelve (12) month period, may be cause for imposing an administrative fine without further warnings.

**In addition, the City may use on or more of the following remedies to gain compliance:**
1. **Issue administrative citation of $100 to $250 per day for every day the violation exists on the Property;**
2. **File a civil complaint in superior court seeking an injunction and penalties of $250.00 per day;**
3. **File a criminal complaint in superior court alleging misdemeanor violations of the Municipal Code: and**
4. **If the property is defined as "substandard housing", notify the Franchise Tax Board so that you will be prohibited from deducting any interest, taxes, depreciation,** or amortization for the above-referenced property for the state income taxes.

Please contact me by phone at **(805) 897-2604** between the hours of 7:30 and 4:30 pm. Monday through Friday once the violations(s) have been abated.

Your cooperation is solicited in the abatement of this violation.

Sincerely,

Lauren Anderson, Senior Building Inspector
City of Santa Barbara
LAnderson@SantaBarbaraCA.Gov

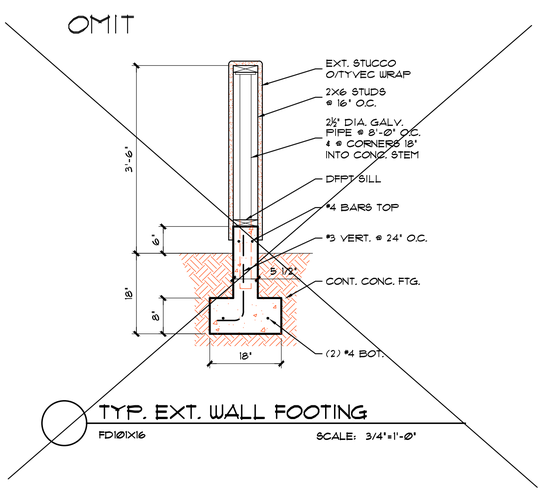


TYP. EXT. WALL FOOTING
FD10X16
SCALE: 3/4"=1'-0"

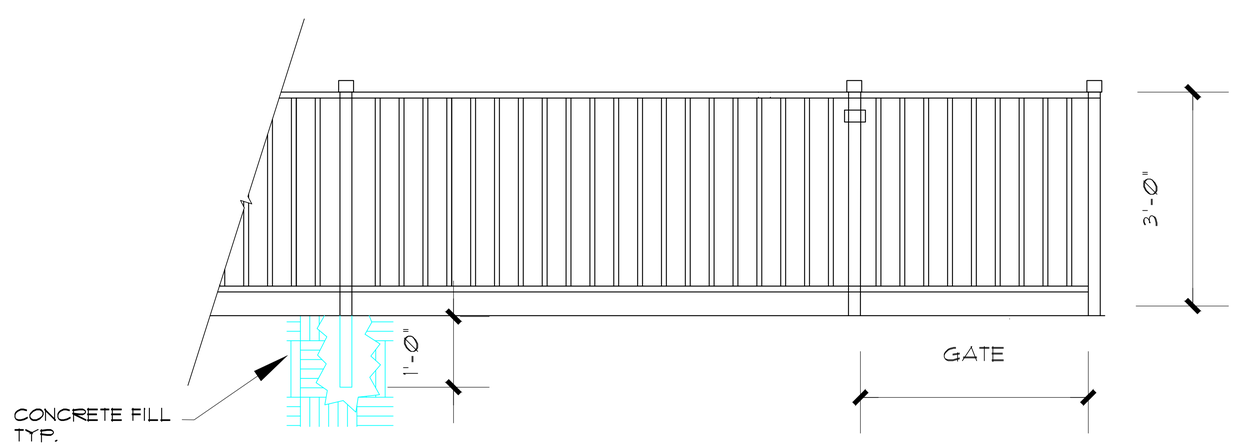


## STEEL FENCE AND GATE DETAIL

SCALE: 1"=1'-0"

COPYTRIGHT.
2017 BY THOMAS OCHSNER.
ALL RIGHTS RESERVED.
NO PART OF THIS DRAWING MAY BE REPRODUCED.

ARCHITECTURE & PLANNING
Thomas Ochsner AIA Architect
10 E. Yanonali Street
Suite 2D
Santa Barbara, CA 93101
Tel 805.770.7576
Cel 805.705.6558
tom@toarchitect.com
www.toarchitect.com

CLIENT

2520 BATH ST.
SANTA BARBARA, CA 93105

PROJECT

2520 BATH ST.

SHEET TITLE

COVER SHEET
SITE PLAN

REVISIONS

1 REVISION TO PERMIT 3.13.20

LICENSED ARCHITECT THOMAS G. OCHSNER C-22199 RENEWAL 9/19 STATE OF CALIFORNIA

PROJECT #
2520BATH

DATE DRAWN

SHEET NO.

T-1.0