# CITY OF SANTA BARBARA
# OUTDOOR DINING LICENSE APPLICATION

Business Name: _____ APN: _____

Business Address: _____

Mailing Address: _____

Business Phone Number: _____

Business Owner: _____

Agent: _____

Business License No.: _____

**Description of Proposed Outdoor Furniture. Include quantity, colors, materials, types:**

| | Amount | Description |
|---|---|---|
| Chairs: | _____ | _____ |
| Tables: | _____ | _____ |
| Umbrellas: | _____ | _____ |
| Heaters: | _____ | _____ |
| Barrier: | | _____ |

**The following must be submitted with this application:**

- ✔ Master Application (for Design Review purposes)
- ✔ Public Works Application Review Fee (per latest Fee Resolution)
- ✔ Community Development Design Review Fee
- ✔ A detailed site plan on 8 ½ x 11 paper. All sidewalk obstruction shall be noted and detailed dimensions shall be clearly shown. (See attached sample site plan.)
- ✔ A copy of your Certificate of Insurance naming the City of Santa Barbara as an additional insured.
- ✔ A photograph of your proposed Outdoor Dining area.
- ✔ A photograph or vendor specification of proposed furniture.

This application along with the above items shall be returned to the City of Santa Barbara, Public Works Permit Counter, P.O. Box 1990, Santa Barbara, CA 93102-1990. **(NOTE: Submittal of an application is not an approval to set-up outdoor dining.)** If you have any questions regarding the Outdoor Dining Program, please contact Michael Cloonan, Senior Engineering Technician at (805) 564-5365.

Applicant has read and covenants to comply with the Operating Standards Administrative Guidelines in Santa Barbara Municipal Code Chapter 9.95 (as amended), and desires to obtain an Outdoor Dining License.

I will defend, indemnify and save harmless the City of Santa Barbara and its officers and employees from any and all loss, liability, damages, or judgments resulting from an claims made against any of them by reason of, or in connection with, operation of an outdoor dining area on a public sidewalk. I waive any loss or damage (direct or consequential) that may arise from the application of the provisions of Santa Barbara Municipal Code Chapter 9.95 and/or the regulations adopted as amended from time to time, and/or any condition or requirements applied or imposed by the City Engineer in connection with an Outdoor Dining license.

Business Owner/Agent Signature: _____ Date:_____

_____
(print name)

Staff Review: Public Works _____ Date:_____

Community Development_____ Date:_____

Fire Department_____ Date:_____

## Chapter 9.95

## USE OF CITY SIDEWALKS AND RIGHTS-OF-WAY FOR DINING PURPOSES

**Sections:**


| | | | |
|---|---|---|---|
| **9.95.010** | **Purpose.** | **9.95.060** | **Alcoholic Beverage Restrictions.** |
| **9.95.020** | **Outdoor Dining - Defined.** | **9.95.070** | **Special Closures.** |
| **9.95.030** | **Outdoor Dining License Required.** | **9.95.080** | **Issuance of License.** |
| **9.95.040** | **Where Outdoor Dining in Public Rights-of-Way Permitted.** | **9.95.090** | **Term and Renewal.** |
| **9.95.050** | **Sidewalk Required to Accommodate Pedestrian Traffic.** | | |


### 9.95.010 Purpose.

The purpose of the regulations and standards in this chapter are to allow increased business and pedestrian traffic by providing safe and visually appealing opportunities for outdoor dining. (Ord. 4820, 1993.)

### 9.95.020 Outdoor Dining - Defined.

"Outdoor dining" means the use of City sidewalks and public rights-of-way for the consumption of food or beverages in conjunction with the operation of a food service establishment properly licensed for such service under state and county health regulations and which provides on-premises customer seating. (Ord. 4820, 1993.)

### 9.95.030 Outdoor Dining License Required.

A. Outdoor dining is not allowed without an outdoor dining license agreement with the City as set forth in this Chapter 9.95.

B. The owner or operator of a business or service which includes outdoor dining shall maintain such operation in compliance with all provisions of the outdoor dining license and the administrative regulations approved pursuant to this Chapter 9.95. (Ord. 5130, 1999; Ord. 4820, 1993.)

### 9.95.040 Where Outdoor Dining in Public Rights-of-Way Permitted.

Outdoor dining is not permitted where, in the opinion of the City Engineer, the speed, volume or nearness of vehicular traffic is not compatible with outdoor dining. All outdoor dining areas must be adjacent to and incidental to the operation of a food service establishment providing on-premises customer seating properly licensed for such service pursuant to state and county health regulations. Use of the sidewalk or public right-of-way must be confined to the actual sidewalk and public right-of-way frontage of the restaurant or food service building. (Ord. 4820, 1993.)

### 9.95.050 Sidewalk Required to Accommodate Pedestrian Traffic.

Outdoor dining is permitted only where, in the opinion of the City Engineer, the sidewalk is wide enough to adequately accommodate both the usual pedestrian traffic in the area and the operation of the proposed outdoor dining. Along State Street, between Cabrillo Boulevard and Victoria Street, the outdoor dining area shall leave not less than eight (8) consecutive feet of sidewalk width which is clear and unimpeded at all points for pedestrian traffic. Outdoor dining operations must maintain adequate clearance for all normal uses of the sidewalk and any special or occasional uses that may arise from time to time. (Ord. 5130, 1999; Ord. 5047, 1998; Ord. 5013, 1997; Ord. 4820, 1993.)

### 9.95.060 Alcoholic Beverage Restrictions.

The service of alcoholic beverages shall be restricted solely to on-premise consumption by customers within the outdoor dining area. Each of the following standards apply to outdoor dining areas which provide alcoholic beverage service:

A. The outdoor dining area must be immediately adjacent to and abutting an indoor restaurant which provides food and beverage service;

B. The outdoor dining area must be clearly and physically separated from pedestrian traffic;

C. The operator shall post a written notice to customers that the drinking or carrying of an open container of alcohol is prohibited outside the outdoor dining area;

D. The outdoor dining operations must be duly licensed by the state Department of Alcoholic Beverage Control. (Ord. 4820, 1993.)

### 9.95.070 Special Closures.

Outdoor dining is an interruptible or terminable license granted by the City pursuant to a contract. The City shall have the right and power, acting through the City Engineer, to prohibit the operation of an outdoor dining area at any time because of anticipated or actual problems or conflicts in the use of the sidewalk area or right-of-way. Such problems and conflicts may arise from, but are not limited to, scheduled festivals and similar events, or parades or marches, or repairs to the street or sidewalk, or from demonstrations or emergencies occurring in the area.

To the extent possible, the licensee shall be given prior written notice of any time period during which the operation of the outdoor dining area will be prohibited by the City. (Ord. 4820, 1993.)

### 9.95.080 Issuance of License.

The City Engineer may issue an outdoor dining license pursuant to administrative regulations issued by the Public Works Director and approved by resolution of the City Council.

At a minimum such regulations shall determine and require the following:

1. The approval and execution of a standard license agreement in a form acceptable to the City Attorney;
2. Proof of insurance naming the City as an additional insured acceptable to the City Administrator;
3. Special site conditions as needed or desirable;
4. Whether the design for seating and signage meets the minimum standards of the established administrative regulations;
5. Such other conditions as are necessary for public safety or to protect public improvements, such as the posting of appropriate security to guarantee the restoration of the right-of-way upon termination of the license;
6. Conditions necessary to restore the appearance of the sidewalk or right-of-way on termination of use;
7. Compliance with the applicable City building, zoning and design review requirements, particularly those requirements with respect to automobile parking.
8. Some form of fair market rent as compensation to the public for use of the sidewalk or right-of-way in an amount established by a resolution of the City Council;
9. The payment of an appropriate license application fee in an amount established by resolution of the City Council;
10. Adequate setback and clearances for all expected pedestrian uses of the sidewalks, as well as for unusual or occasional public uses that can be anticipated. (Ord. 5130, 1999; Ord. 4820, 1993.)

### 9.95.090 Term and Renewal.

The maximum term of an outdoor dining license is one year. Thereafter, the City Engineer may extend the license for additional periods, not to exceed one year each, following review and approval of the operation. If the City Engineer considers additional or revised conditions desirable, such new conditions may be imposed upon the extension, including the imposition of a license renewal fee. (Ord. 4820, 1993.)

RESOLUTION NO. 2000-017

A RESOLUTION OF THE COUNCIL OF THE CITY OF SANTA BARBARA ESTABLISHING AND AMENDING THE STANDARD STREET RIGHT OF WAY AND SIDEWALK OUTDOOR DINING REGULATIONS; AND REPEALING RESOLUTION NO. 99-116

I. PURPOSE

The purpose of these operating standards and administrative guidelines is to establish standards for outdoor dining within areas owned by the City of Santa Barbara and operated pursuant to Santa Barbara Municipal Code Chapter 9.95, an executed revocable license agreement with the City of Santa Barbara, and any other applicable codes. These operating and administrative guidelines are to ensure that the space used for outdoor dining will, at all times, serve a public purpose and allow for adequate pedestrian circulation.

All of the design elements shall be consistent with the design Guidelines of El Pueblo Viejo District, except as noted, or, if outside of this district, they shall be consistent with the Guidelines of the Architectural Board of Review.

All use, operation and improvements related to outdoor dining shall be maintained in conformity with these guidelines and other applicable laws, rules, regulations, and requirements without limitation.

II. OUTDOOR DINING LICENSE AGREEMENT

All operators of outdoor dining areas must obtain, possess, and maintain an outdoor dining license. At a minimum, the following are required:

A. The approval and execution of a standard license agreement in a form acceptable to the City Attorney;

B. Proof of liability insurance acceptable to the City Administrator, naming the City as an additional insured;

C. Compliance with special site conditions as required by the City Engineer;

D. Compliance of all seating and signage with minimum standards of established administrative regulations;

E. Compliance with such other conditions as are necessary for public safety or to protect public improvements, such as the posting of appropriate security to guarantee the restoration of the right-of-way upon termination of the license;

F. Compliance with conditions necessary to restore the appearance of the sidewalk or right-of-way on termination of use; and

G. Compliance with the applicable City building, zoning parking, and design review requirements.

III. FEES

Application and rental fees for use of the City sidewalk will be paid by the Licensee. Fees shall be as adopted from time to time by resolution of the City Council.

IV. ELIGIBLE USES

A. Establishments which provide take-out food service, specialty food service, and full menu food service are eligible for an Outdoor Dining Permit. Outdoor dining areas are for sit-down food and beverage service only; no stand-up service is permitted.

B. All Establishments that serve alcohol must obtain any additional permits that may be required from the Alcohol Beverage Control Board of the State of California.

C. Temporary, mobile, free-standing food service, or non-food serving establishments are not eligible to obtain an Outdoor Dining Permit.

V. ELIGIBLE SITES

A. Outdoor dining permits shall be allowed only in areas of the City zoned for commercial uses.

B. Outdoor Dining Permits do not convey any long term or permanent interest in public property.

C. Outdoor Dining Operations shall be maintained within the following restrictions:

1. All outdoor dining areas must maintain, at all times, the clearances and requirements established by City ordinance. At present such ordinance standards require that Outdoor Dining areas along State Street between Cabrillo Blvd. and Victoria Street must maintain, at all times, a minimum of an eight foot (8') unobstructed pedestrian travelway, which is clear and unimpeded, between the outside of the café area and any obstructions or the curb line. At all other locations within the City, Outdoor Dining areas shall maintain, at all times, a minimum of a six foot (6') unobstructed pedestrian travelway, which is clear and unimpeded, between the outside of the café area and any obstructions or the curb line.

2. All outdoor dining areas must comply with Federal Americans with Disabilities Act standards.

3. Outdoor dining areas are not permitted within 15 feet of the curb lines of intersecting streets, at the ends of each block.

4. The elevation of the outdoor dining area shall be the same elevation as the sidewalk.

5. In addition to the restrictions identified above, the City Engineer shall maintain standards for normal uses that include:

a. maintenance of ten (10) feet of pedestrian clearway for use by pedestrians walking by or adjacent to the Outdoor Dining operation, for all sidewalks where such clearway is reasonably feasible;

b. limitation of outdoor dining operations to a maximum width of seven (7) feet of public right of way use for outdoor dining purposes, excluding obstructions created by approved planters, landscaping, street furniture, and similar obstructions, where reasonably feasible;

c. maintenance of uniform alignment of outdoor dining areas and adjacent café barriers to avoid irregularities in adjacent barriers or other improvements, where reasonably feasible; and

d. Depending upon the setting and location, Outdoor Dining Operations may be allowed to use up to a maximum of 10.0 feet of the sidewalk but in no case shall the café use more than fifty per cent (50%) of the available (non-landscaped) sidewalk.

6. Adjustment shall be made to existing uses to incorporate all such standards on the occasion of significant public improvement activity to a block face, such as the removal, restoration, or renovation of sidewalks; an adjustment of the street width; or material change in or addition to the street furniture, landscaping, or lighting in the area. The City Engineer is expected to provide more tolerance for minor deviations from the standards in this resolution for those limited areas where existing uses are maintained in a street or sidewalk that is not impacted by pedestrian or vehicle traffic nor affected by significant public improvement as provided herein.

7. Notwithstanding any provision in these regulations regarding existing uses, each outdoor dining operation shall be subject to the application of the discretion of the City Engineer to adjust uses and apply standards in the best interests of the City. No provision, exemption, limitation or standard identified in these regulations is intended to protect any existing or future interest in any outdoor dining license from any direction, modification,

interpretation or application made by the City Engineer. The determinations made by the City Engineer in connection with the application of these regulations shall be final.

D. Outdoor dining areas shall be required to maintain all standards for building egress for adjacent premises, as defined by the Uniform Building and Fire Codes.

E. Vehicular parking shall be provided by the establishment in accordance with the requirements of the City Municipal Code for the occupancy of the patrons anticipated for the outdoor dining area.

F. Outdoor dining areas shall be cleared and barriers removed along State Street during the Summer Solstice parade and the Fiesta parade times except by application to and approval by the City Engineer. Outdoor dining areas shall be cleared and barriers, Tables and chairs are to remain down between 8:00 a.m. Friday and 6:00 a.m. Sunday of the annual Fiesta celebration.

VI. DESIGN STANDARDS

A. BARRIERS

1. A barrier surrounding the dining area is not required if the food provider limits outdoor tables and chairs to one row abutting the wall of the establishment and no alcohol is served outdoors. Where alcohol is served outdoors and there is only one row of tables, a barrier is not required if waived by the Alcohol Beverage Control Board.

2. Notwithstanding the above, all food service establishments along State Street between Cabrillo Boulevard and Sola Street must have a barrier if alcohol is served.

3. Outdoor dining areas with a row of tables in addition to those along the storefront shall have barriers. Additionally, barriers may be required at the discretion of the City Engineer.

a. Barriers must be secured to the sidewalk, and be able to be removed during non-operating times (such as parades), or upon the request of the City Engineer.

b. The barriers will be attached to the sidewalk by bolts through a plate, which is set flush to the sidewalk at the base of a post. Insert plugs shall be placed in the sidewalk upon the removal of the bolts and barriers. The plugs will be flush with the sidewalk, and shall not cause a trip hazard. Barriers shall be attached to the sidewalk in a manner approved by the City Engineer.

c. All barriers and/or posts must be able to withstand one hundred (100) pounds of horizontal force at the top of the barricade when in their fixed positions, and be of durable, weather resistant materials.

d. The height of any barrier shall not exceed three feet (3'); except finials and/or continuous landscaping shall not exceed three feet six inches (3'6"). Barriers shall have no sharp or protruding elements that could injure pedestrians. Solid barriers are not permitted.

e. The barriers perpendicular to the storefront must be rigid, by means of railings; barriers running parallel to the storefront may be swag chains or of similar conformation.

f. For locations where no barriers are installed, either potted plants (four to five feet high) situated at each far corner of the outdoor dining area, or a tactile barrier inset in the sidewalk along the border of the dining area is required in order to delineate the area and aid the sight impaired.

g. A barrier plan shall be submitted to the City Engineer and approved prior to operating an outdoor dining area or constructing the required barrier.

B. UMBRELLAS

The use of removable umbrellas is allowed provided that they maintain at least six-feet eight-inches (6'8") of clearance above the sidewalk level and do not exceed ten feet (10') in height. Umbrella canopies shall be of uncoated canvas, having solid, plain colors as approved for outdoor dining areas by the Historic Landmarks Commission within El Pueblo Viejo Landmark District, or by the Architectural Board of Review outside of El Pueblo Viejo Landmark District. Umbrellas may display no advertising or logo, and must be entirely within the dining area boundaries.

C. SIGNS

Commercial signs, displays and product logos are not permitted within any outdoor dining areas, except as may be specifically approved by the Sign Committee.

D. LIGHTING

An electric permit must be obtained from the Building and Safety Division to install outdoor lighting. All proposed lighting must be approved by the Historic Landmarks Commission within El Pueblo Viejo Landmark District, or by the Architectural Board of Review outside of El Pueblo Viejo Landmark District.

E. MATERIALS AND COLORS

Materials, colors and stylistic treatment of all elements of the design of outdoor dining facilities shall be as approved for outdoor dining areas by the Historic Landmarks Commission within El Pueblo Viejo Landmark District, or by the Architectural Board of

Review outside of El Pueblo Viejo Landmark District. Exception for the use of alternate materials, colors, and styles are subject to review and approval by the Historic Landmarks Commission within El Pueblo Viejo Landmark District, or by the Architectural Board of Review outside of El Pueblo Viejo Landmark District. Provisions to implement the administrative review and approval of outdoor dining proposals in conformity to these regulations by City Staff may be established by the City Council, the Architectural Board of Review, and the Historic Landmark Commission.

The placement, color, style and types of outdoor dining furniture and barriers shall be consistent with and shall complement the design and appearance of the building, consistent with the applicable review guidelines. Use of traditional materials for furniture is preferred within the El Pueblo Viejo Landmarks District. The use of white plastic furniture, redwood tables or benches and/or furniture inappropriate to the vicinity of the outdoor dining area are prohibited. Table size is limited to 36" in diameter or to 36" on each square side. The outdoor dining furniture (its design, materials, colors, etc.) must be specified on the application.

Furniture, designs and colors incorporated in any outdoor dining proposal approved before July 1, 1997, but which do not match standards referred to in these regulations, shall be made to conform to the standards referred to herein on or before July 1, 1998. It is the responsibility of the applicant to put such furniture and improvements into conformity with these standards. Upon any new construction, improvement or replacement of structures or furniture the additions, improvements and replacements shall be in conformity with the standards referred to herein.

F. EXCEPTIONS TO DESIGN STANDARDS

Requests for deviations from these guidelines as to materials, colors, or styles including requests for use of outdoor heaters, used must be approved by the Historic Landmarks Commission within El Pueblo Viejo Landmark District, or by the Architectural Board of Review outside of El Pueblo Viejo Landmark District.

VII. STANDARDS OF OPERATION

A. Restaurant management shall be responsible to maintain and operate the outdoor dining area, and to remove barriers as required above. The operator of the food serving establishment shall be responsible to supervise and control behavior of patrons within the outdoor dining area. Operators who allow behavior that disturbs the general public or passersby on the sidewalk will be subject to suspension or revocation of their outdoor dining license.

B. Trash receptacles must remain within the outdoor dining area, as defined by a secure, but removable barrier, at all times. No other items are allowed in the outdoor dining area. Any outdoor heaters in Outdoor Dining areas are:

1. limited to barricaded sites;
2. reviewed on a case-by-case basis by Historic Landmarks Commission;
3. limited to a maximum of two per site per Historic Landmarks Commission's recommendation, with a minimum spacing of 20 feet apart;
4. subject to annual rental rate as set forth in a fee resolution. For each heater installed, an approved café chair must be removed; and
5. subject to a one-time application fee as set forth in a fee resolution.

C. All items used inside the outdoor dining areas, including tables, chairs, umbrellas and trash cans, must be removed each night and when not in use. Storage of outdoor dining appurtenances on the sidewalk is not allowed.

D. The sidewalk inside the outdoor dining area, and all appurtenances placed thereto, shall be maintained in a clean (sweep and mop) and attractive manner.

E. The latest hour for serving food or beverages in the outdoor dining area is 11:30 p.m. Neither food nor beverages shall be served in the outdoor dining areas between the hours of 11:30 p.m. and 6:00 a.m.

F. A copy of the Outdoor Dining Permit shall be kept on the premises at all times. Any modifications must be approved by the City Engineer.

VIII. ENFORCEMENT

A. In addition to means of enforcement otherwise available, in the discretion of the City Engineer, property which is not in conformance with these regulations shall be removed pursuant to Santa Barbara Municipal Code Chapter 10.56.

B. In addition to means of enforcement otherwise available, in the discretion of the City Engineer, the owner of premises and the operator of an outdoor dining operation which is not in compliance with the Ordinance Code and these regulations, shall be subject to citation under the provisions of Santa Barbara Municipal Code Chapter 1.25.

IX. TERMINATION

The City retains the right to revoke the Outdoor Dining License Agreement upon 24 hours written notice to Licensee, regardless of conformance with these provisions. Within 48 hours of the termination of the Outdoor Dining License Agreement, the sidewalk will be returned to the condition existing prior to the placement of the outdoor dining facilities or other condition acceptable to the City Engineer.

X. APPLICATION

Applications for an Outdoor Dining License Agreement shall be per attached Exhibit A. The Public Works Department will forward a copy of the application package to the Fire Department and Community Development Department - Land Use Controls Division for their review and approval.

XI. POSSESSORY INTEREST

The interest agreed to under outdoor dining license agreements is an interest that may incur a possessory interest tax. Permittee must provide for any possessory interest tax.

Resolution No. 99-116 is hereby repealed.

CITY OF SANTA BARBARA
PUBLIC WORKS DEPARTMENT

ORDINANCE NO. 5013

AN ORDINANCE OF THE CITY COUNCIL OF THE CITY OF SANTA BARBARA AMENDING SECTION 9.95.050 OF THE SANTA BARBARA MUNICIPAL CODE PERTAINING TO THE USE OF CITY SIDEWALKS AND RIGHTS OF WAY FOR DINING PURPOSES

THE CITY COUNCIL OF THE CITY OF SANTA BARBARA DOES ORDAIN as follows:

SECTION 1. Section 9.95.050 of the Santa Barbara Municipal Code is amended to read as follows:

9.95.050 Required Sidewalk or Right of Way Width

Outdoor Dining is permitted only where, in the opinion of the City Engineer, the sidewalk is wide enough to adequately accommodate both the usual pedestrian traffic in the area and the operation of the proposed outdoor dining. The outdoor dining area shall leave not less than six (6) consecutive feet of sidewalk width at every point which is clear and unimpeded for pedestrian traffic. Outdoor dining areas shall not extend more than 10.0 feet into the width of the sidewalk. Notwithstanding the above, outdoor dining areas shall leave not less than eight (8) consecutive feet of sidewalk width which is clear and unimpeded for pedestrian traffic at all points along State Street between Cabrillo Boulevard and Sola Street. Under appropriate conditions and with the approval of the City Engineer, two (2) separated 6 foot clear areas may be considered the equivalent to an 8 foot clear area as provided above.

(Ord.5013, 1997; Ord 4820, 1993)

Bill No. 5032
Ordinance No. 5032
Adopted June 3, 1997

NOTE:
WHEN BARRIERS ARE REMOVED, PROVIDE FLUSH WROUGHT IRON COVER PLATE OVER (E) SLEEVE (SHOWN DASHED)

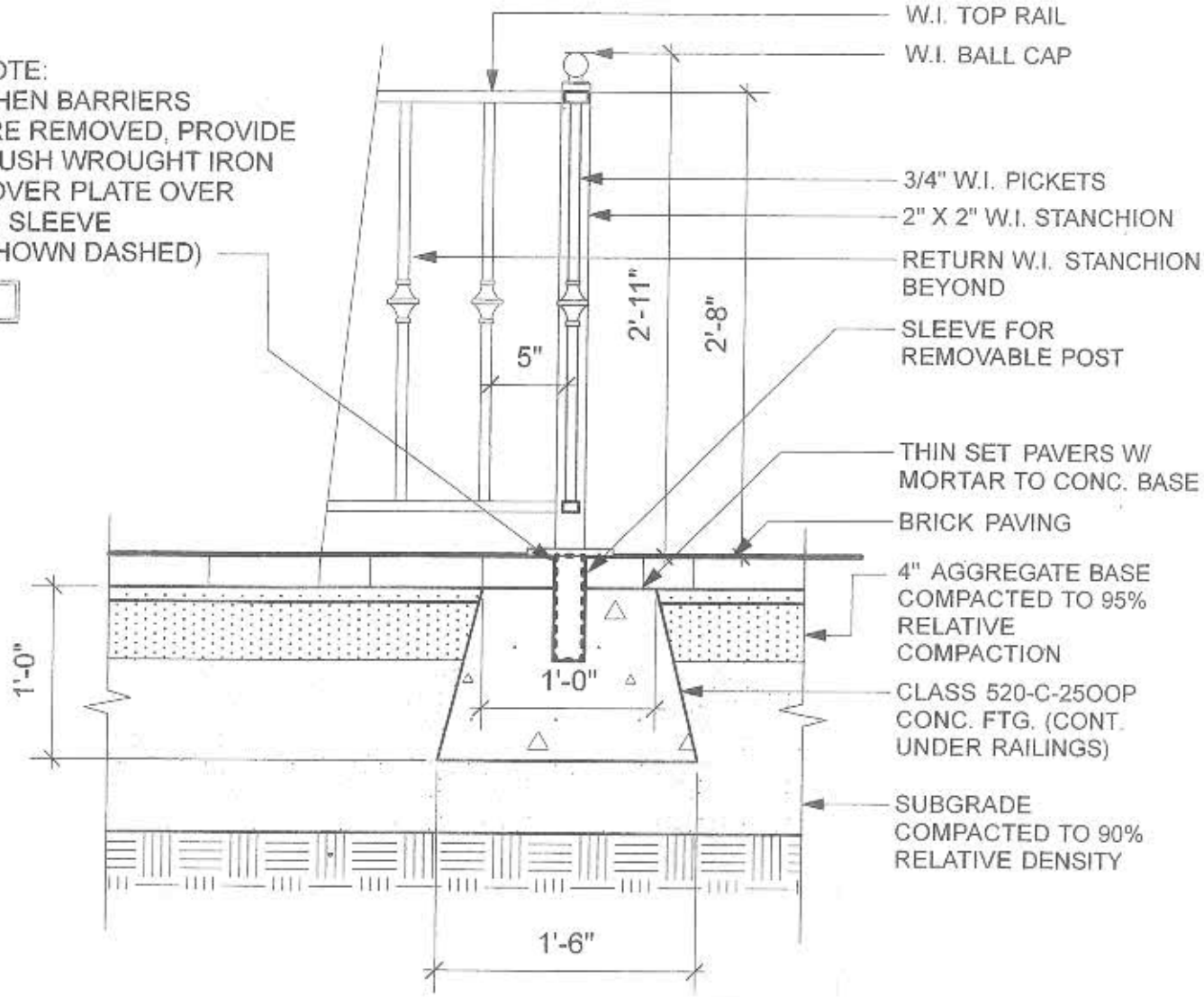


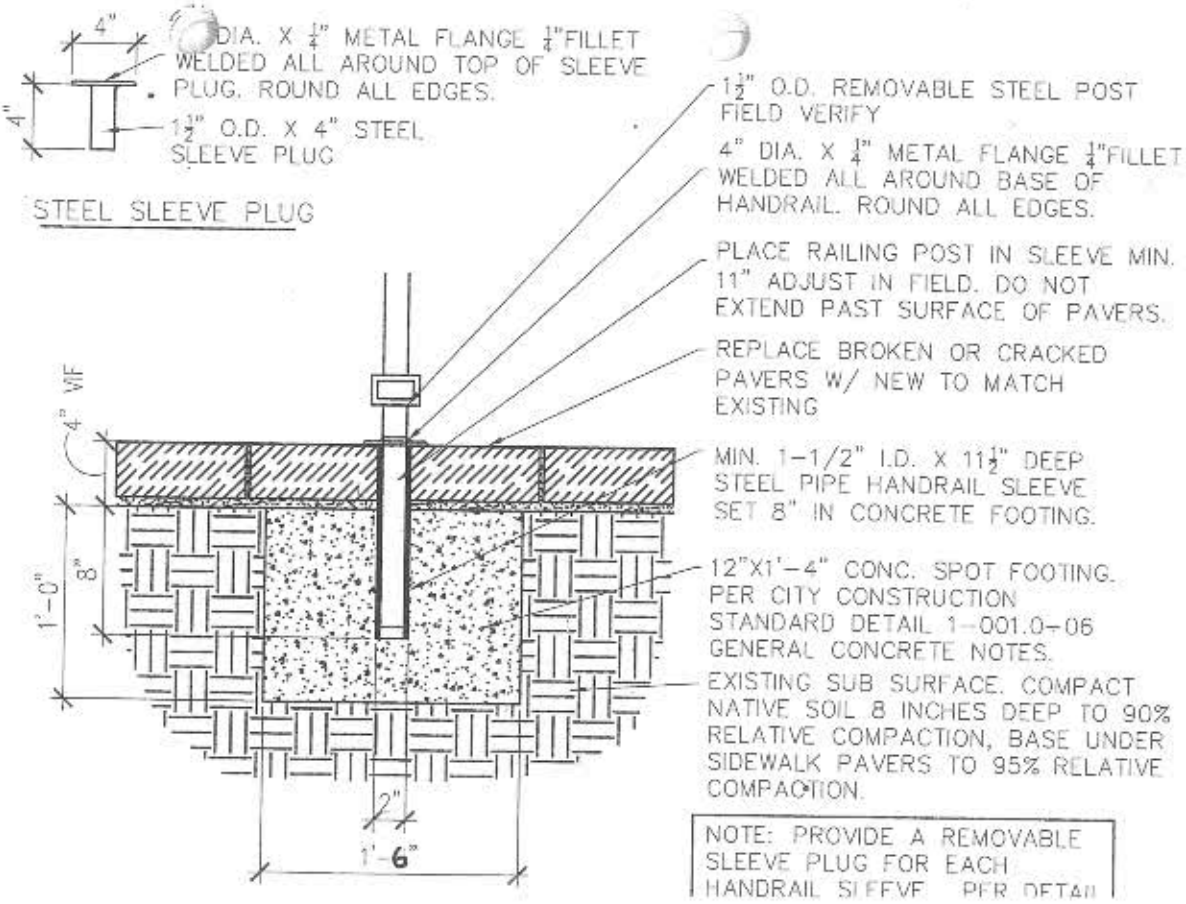


DRAWING BARRIER FOOTING EXAMPLES