# Appendix D

## Valle Verde Retirement Community Project
## Traffic Impact Study

# Valle Verde Retirement Community Improvement Project EIR Traffic Impact Study

Prepared for

Rodriguez Consulting, Inc.

Prepared by

Iteris, Inc.
1700 Carnegie Avenue, Suite 100
Santa Ana, CA 92705

July 2, 2010

16-J09-1642

# TABLE OF CONTENTS

INTRODUCTION....1
Project Description....1

EXISTING CONDITIONS....8
Description of Existing Roadway Conditions....8
Description of Existing Intersections....9
Existing Transit Operations....12
Existing Bicycle Facilities....12

TRAFFIC OPERATIONS ANALYSIS METHODOLOGY....13
City of Santa Barbara LOS Acceptable Limits....13
Threshold of Significance....14

EXISTING TRAFFIC OPERATIONS ANALYSIS....16

PROPOSED PROJECT AND CUP BUILDOUT TRAFFIC CHARACTERISTICS....18
Proposed Project Scenario....18
CUP Buildout Scenario....18
Trip Generation....18
Trip Distribution and Assignment....19

FUTURE WITHOUT PROJECT TRAFFIC OPERATIONS ANALYSIS....24
Ambient Traffic Growth....24
Future Without Project Traffic Analysis....24
Future With CUP Buildout Analysis....26

FUTURE WITH PROJECT TRAFFIC OPERATIONS ANALYSIS....29
Future With Project Traffic Operations Analysis....29
Comparison of Proposed Project Scenario Versus CUP Buildout Scenario....31

CUMULATIVE PROJECT TRAFFIC OPERATIONS ANALYSIS....32
Cumulative Project Growth....32
Cumulative Conditions With CUP Buildout Scenario....36

TRANSPORTATION ACCESSIBILITY ANALYSIS....39
Vehicular Access Analysis....39
Transit Access Analysis....43
Bicycle Access Analysis....43
Pedestrian Access Analysis....43

CONSTRUCTION TRAFFIC IMPACT ANALYSIS....44

CONGESTION MANAGEMENT PROGRAM ANALYSIS....45

EMERGENCY EVACUATION ANALYSIS....46

# APPENDICES

APPENDIX A – TRAFFIC COUNT DATA SHEETS

APPENDIX B – LEVEL OF SERVICE WORKSHEETS

APPENDIX C – APPLICANT-PROVIDED EMPLOYEE TRAVEL SURVEY

APPENDIX D – SANTA BARBARA COUNTY CONGESTION MANAGEMENT PROGRAM IMPACT ASSESSMENT GUIDELINES

## LIST OF FIGURES

Figure 1: Study Area ..... 2

Figure 2: Site Plan ..... 3

Figure 3: Existing Lane Configurations ..... 11

Figure 4: Existing Peak Hour Traffic Volumes ..... 17

Figure 5: Proposed Project Trip Distribution ..... 21

Figure 6: Project-Only Peak-Hour Traffic Volumes ..... 22

Figure 7: CUP Buildout Added Peak-Hour Traffic Volumes ..... 23

Figure 8: Future Without Project Peak-Hour Traffic Volumes ..... 25

Figure 9: Future With CUP Buildout Peak-Hour Traffic Volumes ..... 28

Figure 10: Future With Project Peak-Hour Traffic Volumes ..... 30

Figure 11: Related Project Locations ..... 34

Figure 12: Cumulative Project Peak-Hour Traffic Volumes ..... 35

Figure 13: Total Cumulative With Project Peak-Hour Traffic Volumes ..... 38

## LIST OF TABLES

Table 1: Proposed Development Summary ..... 5

Table 2: Valle Verde Existing and Proposed Parking Spaces ..... 7

Table 3: Intersections Requiring Capacity Analysis ..... 10

Table 4: Signalized Intersection Level of Service Definitions ..... 14

Table 5: Stop Sign-Controlled Intersection Level of Service Definitions ..... 14

Table 6: LOS Analysis – Existing Conditions ..... 16

Table 7: Valle Verde Proposed Project Trip Generation ..... 20

Table 8: LOS Analysis – Future Without Project ..... 26

Table 9: LOS Analysis – Future With CUP Buildout Conditions ..... 27

Table 10: LOS Analysis – Future With Project Conditions ..... 29

Table 11: Capacity Analysis Comparison – Project Versus CUP Buildout ..... 31

Table 12: Related Project Trip Generation Estimates ..... 33

Table 13: LOS Analysis – Cumulative With Project Conditions ..... 36

Table 14: LOS Analysis – Cumulative Project Conditions With CUP Buildout ..... 37

# INTRODUCTION

This report summarizes the results of the traffic impact analysis that was undertaken for the proposed redevelopment of a portion of the Valle Verde Retirement Community site, located in the City of Santa Barbara. This report documents the methodology, findings and conclusions of the traffic impact analysis conducted for four key intersections in the vicinity of the project site during weekday peak conditions.

The traffic analysis assesses the effects of the additional vehicle trips expected to be generated by implementing the Proposed Project (Project). The traffic impact analysis also takes into account other traffic growth due to specific development projects in the surrounding area and overall ambient growth in background traffic. Because the traffic from the existing Valle Verde development is included as part of the existing conditions, the effects on traffic operations from that portion of the development are already accounted for initially as part of the existing conditions and then are carried forward implicitly through the subsequent analyses. Therefore, the impacts of not only the Project but the entire Valle Verde site at completion of the Project are accounted for in the Future and Cumulative analyses.

In addition to the typical Existing Conditions, Future Without Project, Future With Project, and Cumulative analyses, the report evaluates and compares the operating conditions at the four intersections and impacts that would result if the applicant were to build out under the previously approved and constructed Conditional Use Permit. This alternative scenario is discussed in more detail later.

## Project Description

The Valle Verde Retirement Community is located in the Hidden Valley neighborhood in the southwestern portion of the City of Santa Barbara. The project site is approximately 59.75 acres in size, is comprised of five legal parcels, and is generally bound by residential areas to the south and west; the La Cumbre Country Club to the north; and Hidden Valley Park, Arroyo Burro Creek and residential uses to the east. **Figure 1** shows the location of the proposed project site in relation to the surrounding street system while **Figure 2** illustrates the site plan for the proposed project when complete.

The proposed project will provide various additions and modifications to the Valle Verde Retirement Community facility. The major components of the project are listed below:

- 40 new residential units
- Assisted Living Facility additions and remodel
- Administration Building additions and remodel
- New Maintenance Building
- Other building additions and remodel
- New on-site parking spaces and changes to existing parking areas

For descriptive purposes in this study the locations of individual project components are described using references to their general location on the project site (e.g. the north, northeast, south, west, east, and central portions of the project site). The portion of project located in the southeast corner of the project site is referred to as the “Rutherford” parcel.

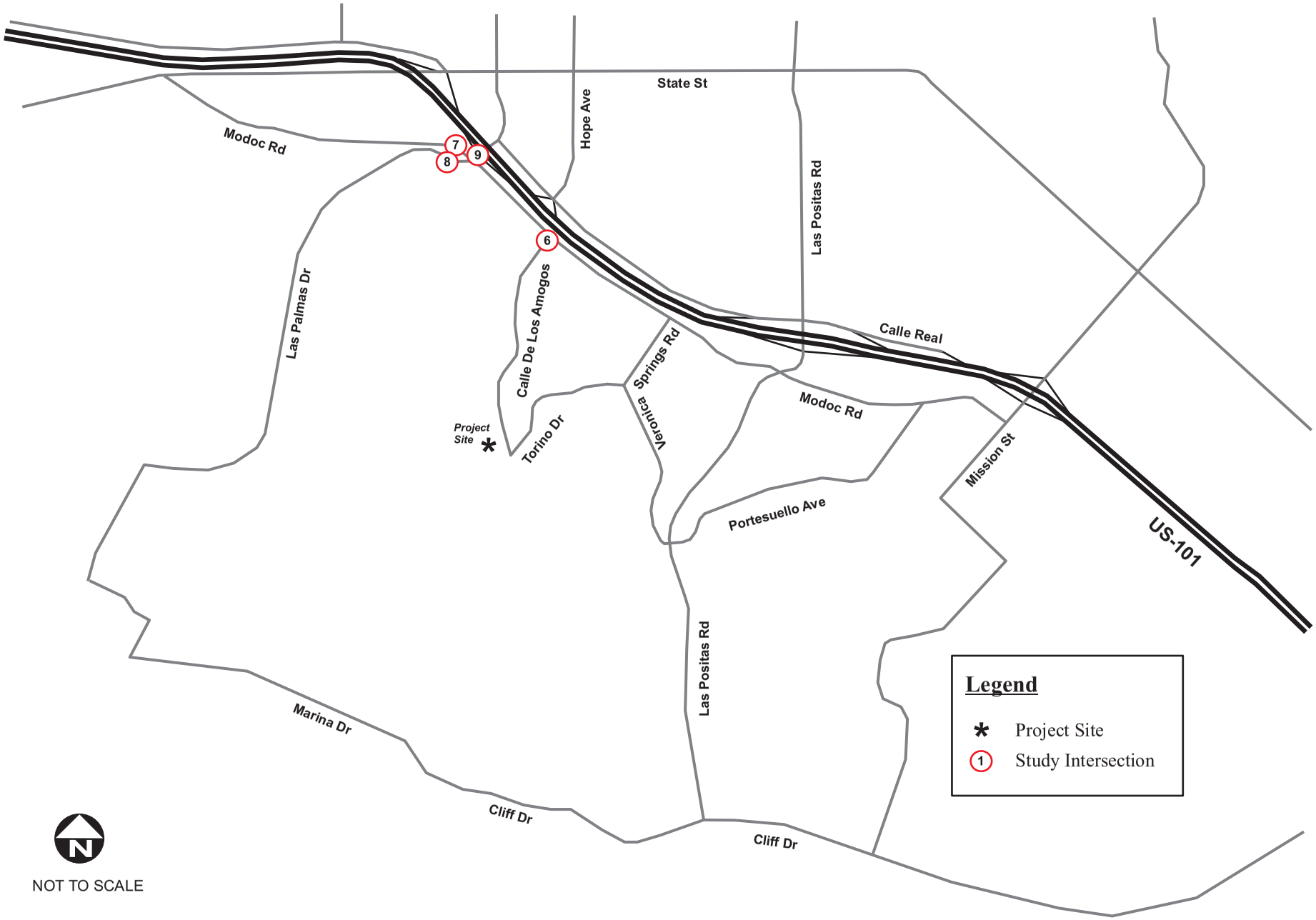


ITERIS

Figure 1
Study Area
Valle Verde Home Project TIA

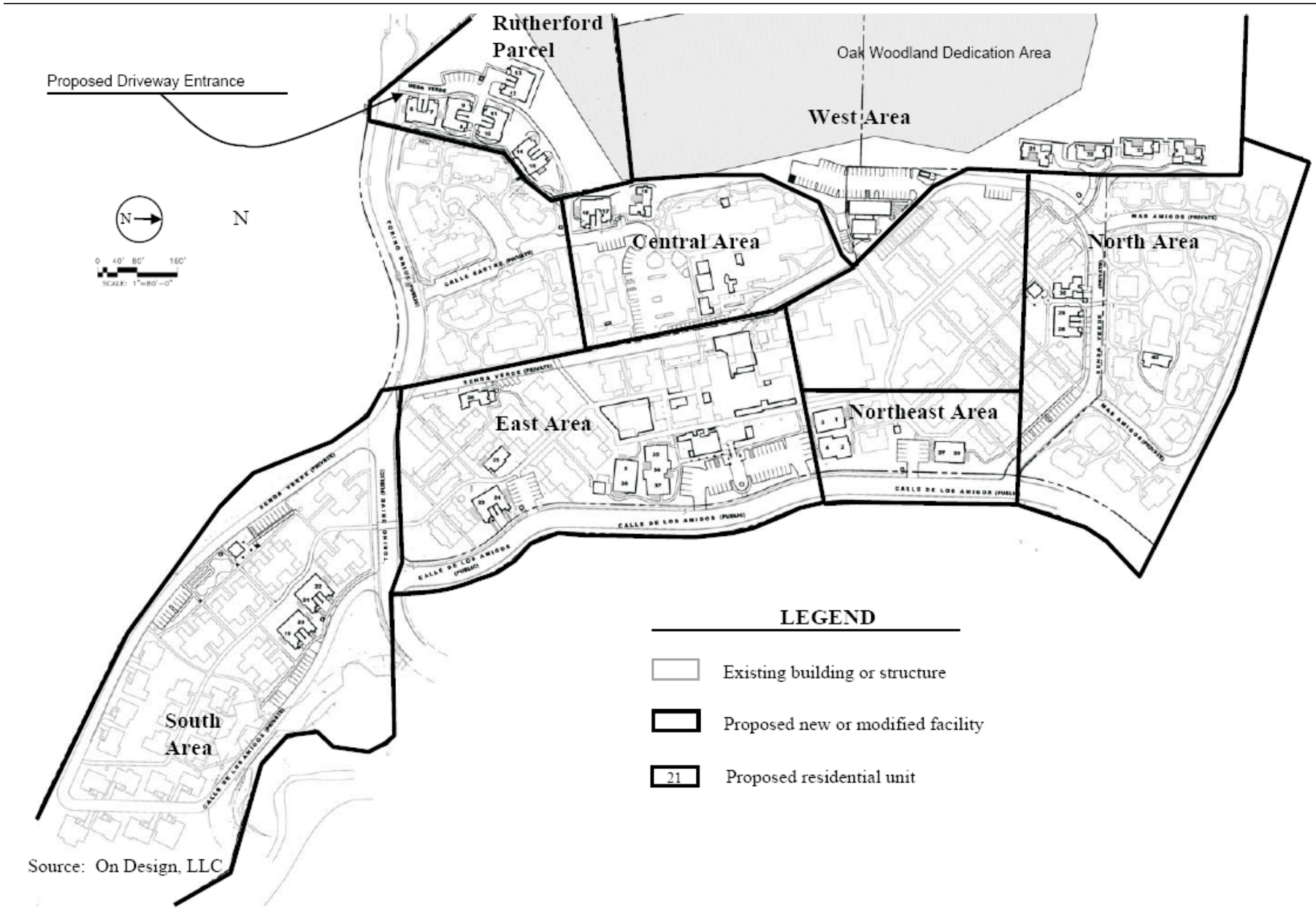


Source: On Design, LLC

ITERIS

**Figure 2**
**Project Site Plan**
**Valle Verde Home Project TIA**

The Project would result in the construction of 40 new independent living residential units on the project site. This project component also includes the demolition of the single-family residence located on the Rutherford parcel; demolition of two independent living units (a duplex building), and the demolition of four studio units that are provided in a single structure. With the implementation of this project component the number of residences provided at the Valle Verde Community would be increased from 224 units (213 Valle Verde residential units plus 10 Valle Verde studio units plus the Rutherford parcel residence) to 257 units (224 existing units minus 2 Valle Verde residential units, the 4 Valle Verde studio units and the Rutherford parcel residence; plus the 40 proposed units). Therefore, the proposed project would result in a total net increase of 33 units on the project site.[1]

The 40 proposed residential units would be provided in a variety of configurations, including 9 detached units, 28 units in duplex configurations, and 3 units in a triplex configuration. All proposed dwelling units would be two-bedroom, one-story buildings and would range between 1,084 to 1,425 net square feet in size, excluding garage area.

The net building area for the existing and proposed buildings that would be located at the Valle Verde facility after the implementation of the proposed project is summarized on **Table 1**.

### Site Access and Parking

**Site Access.** Access to the project site is provided by two public streets: Calle de los Amigos, which intersects with Modoc Road; and Torino Drive, which can be accessed from a number of streets including Veronica Springs Road and Palermo Drive. Veronica Springs Road intersects with both Modoc Road and Las Positas Road; and Palermo Drive intersects with Modoc Road (Figure 1).

Access to the project site would continue to be provided by the existing public street system, and access throughout the site would continue to be provided by a network of on-site private streets. Eight of the proposed residential units that would be located on the Rutherford parcel would be accessed by a new driveway that would connect to Torino Drive (Figure 2).

**Parking.** There are presently 331 parking spaces located on the project site, including 289 uncovered spaces and 42 garage/carport spaces. The proposed project would provide a total of 83 net new parking spaces through a combination of uncovered parking spaces in new parking lots, uncovered parking spaces in reconfigured parking lots, and parking spaces in new garages and carports. Single-car garages would be provided for 27 of the units, 10 units would be provided with carports, and three units would be allocated uncovered parking. With the implementation of the proposed project there would be a total of 414 on-site spaces. A breakdown of the total on-site parking is shown in **Table 2**

[1] The proposed project would result in a net increase of 33 residential dwelling units on the project site. Other methods could be used to calculate the project-related change in on-site units because the existing residence on the Rutherford parcel is not part of the existing Conditional Use Permit that has been approved for the Valle Verde Retirement Community, and the existing studio units located on the project site are not considered to be residential units by the City because they do not have kitchens. For analysis purposes in this study, however, the residence on the Rutherford property and the existing studio units all contribute to existing or "baseline" conditions.

**Table 1: Proposed Development Summary**

| | Added | | Removed | |
|---|---|---|---|---|
| | Units | Description | Units | Description |
| **Residential** | | | | |
| | 40 Units | **Independent Living**<br>North Area – 4 units in 2 single and 1 duplex structure<br>Northeast Area – 6 units in 3 duplex structures<br>South Area – 4 units in 2 duplex structures<br>West Area – 4 units in 4 single structures<br>East Area – 9 units in 2 single, 2 duplex, and 1 triplex structure<br>Central Area – 3 units in 1 single and 1 duplex structure<br>Rutherford Parcel – 10 units in 5 duplex structures | 4 Units<br><br>2 Units | **Independent Living**<br>Four (4) studio units in a single structure located in the east project area.<br><br>Two 2-bedroom units located in the east project area. |
| | 4 Rooms/Beds | **Assisted Living**<br>Modifications to the Assisted Living Facility building to provide a new fitness room, four (4) new assisted living rooms/beds, new restrooms and new staff area. | 1 DU | **Single Family**<br>Demolition of the single-family residence located on the Rutherford parcel. |
| **Bed and Breakfast** | | | | |
| | 4 Units | Four bed and breakfast units | 2 Units | Two bed and breakfast units |
| **Other Uses** | | | | |
| | **Administration Building.** The Administration Building is located in the eastern portion of the project site. Uses that will be provided in the Administration Building include a variety of offices, large and small conference rooms, a small bank branch office, lobby, restrooms, storage and mechanical equipment areas, and other accessory uses. | | **Hospice Facility.** The 2,105 square-foot facility located in the east project area will be removed. | |

Table 1: Proposed Development Summary (continued)

| | Added | Removed |
|---|---|---|
| | **Maintenance Building.** Two new structures would be provided at a location slightly to the south of the existing building site. The eastern portion of the new maintenance building would be a one-story structure that provides storage areas, shop areas, and other accessory uses. The western portion of the new maintenance building would be a two-story structure that would be partially built into an adjacent sloping area. Uses that would be provided in this building include laundry services, storage areas, offices and other accessory uses. | **Maintenance Building.** The existing building would be demolished. |
| | **Salon/Staff Lounge Building.** The Salon/Staff Lounge building is located in the east portion of the project site. All of the existing building space would be remodeled and upon completion of the proposed project, the building would be used to provide an expanded salon area, expanded staff lounge and activity center. | **Other Buildings.** Other common buildings to be demolished include the existing maintenance building. In addition to the demolition of the identified buildings, a variety of other structures are to be removed from the project site, including parking lots, walkways, curbs, driveways and trash enclosures. |
| | **Dining/Multi-Purpose Building.** The Dining/Multi-Purpose building is located in the east portion of the project site and provides a variety of uses, including a dining room, theater/multi-purpose room, kitchen, lobby, loading dock area and other accessory uses. The proposed building changes to the building would add a total of 1,592 net square feet of floor area to the building. | **Wellness Facility.** The Wellness Facility is located in a structure that also includes one of the residential units that is to be removed. The entire building is to be demolished and is located in the east project area. |
| | **Gazebo Buildings.** Three new gazebo buildings would be provided on the south, east and north portions of the project site. Each of the proposed gazebo buildings would provide a small activity area, janitorial and laundry facilities, and a restroom. | **Gazebo Buildings.** Two of the existing gazebo structures located in the east and south project areas would be removed |
| | **Recreation Building.** The Recreation Building would be remodeled and 56 net square feet of new floor area would be added. The proposed building modifications would convert an art room and fitness area to a lounge, common area and storage. | |
| | **Other Remodeled Areas.** Several other facilities located on the project site would be remodeled. These facilities include the installation of a small delicatessen/café in the Social Building in the east project area; and the remodel of several outdoor patio areas. | |
| *Source: City of Santa Barbara and Rodriguez Consulting, 2009* | | |

Table 2: Valle Verde Existing and Proposed Parking Spaces

| | Existing Spaces | Removed | Proposed New Spaces | Total (Net New) |
|---|---|---|---|---|
| Uncovered | 289 | <126> | 172 | 335 (46) |
| Covered | 42 | 0 | 37 | 79 (37) |
| **Total** | **331** | **<126>** | **209** | **414 (83)** |

CUP Buildout Scenario

This scenario will evaluate traffic impacts that would result if the applicant were to build out under the previously approved and constructed Conditional Use Permit (CUP), which would add approximately 40 independent living units to the project site, returning the independent unit count to previously approved and historic levels. The 40 units would be provided by making interior modifications to existing structures. This scenario could be implemented by obtaining a building permit and no discretionary approvals would be required.

# EXISTING CONDITIONS

A site visit was conducted to assess existing conditions at the project site and within the study area. The field inventory included review of intersection geometric layout, traffic control, lane configurations, posted speed limits, transit service, land use, and parking.

## Description of Existing Roadway Conditions

The following describes existing conditions at the major roadways within the study area:

*U.S. Highway 101 (US-101)* is located approximately 0.9 to 1.2 miles driving distance north of the project site and provides regional access to the project through its interchanges with Las Positas Road and Las Palmas Drive/La Cumbre Road. This facility is the primary north-south link between the cities of Santa Barbara, Goleta, Buellton and the Santa Ynez Valley and Montecito, Carpinteria and eventually Ventura to the south. In the vicinity of the study area, U.S. Highway 101 is a six-lane freeway with traffic signals at the ramps terminals.

*Las Positas Road (State Route 225)* is a north-south roadway that travels along the western edge of the project site. This facility begins at State Street to the north and extends southward before terminating at Cliff Drive. The segment located between U.S. Highway 101 and Cliff Drive is designed as a Caltrans facility (SR 225). Between State Street and Modoc Road, this roadway consists of two travel lanes in each direction. It then narrows to one lane in each direction from Modoc Road to Cliff Drive.

*Calle Real* is an east-west frontage road located immediately north of U.S. Highway 101 between Pueblo Street and Las Palmas Drive. Beginning at Treasure Drive, this facility operates as a one-way westbound roadway until reaching Las Positas Road. West of Las Positas Road, it returns to two-way operation and continues to Las Palmas Drive. This roadway generally consists of one travel lane in each direction. The land uses located along Calle Real are primarily residential in nature.

*Modoc Road* is an east-west roadway located south of U.S. Highway 101 and extends from Hollister Avenue to Mission Street. This roadway consists of one travel lane in each direction. Land use along this facility is primarily residential with some office/commercial uses located immediately south of U.S. Highway 101. Striped bicycle lanes are also provided along Modoc Road within the study area.

*Calle de los Amigos* is a north-south public/private road that extends from its northern terminus at Modoc Road to its southern terminus within the Valle Verde development. Between Modoc Road Torino Drive the street is public. South of Torino it enters the Valle Verde site and becomes a private roadway providing access to the residential units in the southern portion of the development. This facility consists of one travel lane in each direction with on-street parking allowed along most of its length.

*Las Palmas Drive/South La Cumbre Road* is a generally north-south road that extends south as La Cumbre Road from its northern terminus at Foothill Road through the signalized interchange ramps with U.S. Highway 101 where it becomes Las Palmas Drive and continues south into Hope Ranch and eventually turns into Robles Drive. The majority of the roadway has two lanes with the section between State Street and Via Senda having four lanes. The two-lane sections are lined predominantly with residential uses, while the four-lane sections are lined with commercial uses. Bike lanes are provided within the study area. On-street parking is only allowed along some segments north of State Street.

*Torino Drive* is an east-west two-lane road that extends between Veronica Springs Road on the east and its western terminus just west of Valle Verde. It is lined with residential uses and has on-street parking along its entire length.

*Veronica Springs Road* is a north-south two-lane road extending between its unsignalized intersection with Modoc Road on the north and its signalized intersection with Las Positas Road on the south. Veronica Springs Road has one travel lane in each direction with on-street parking along most of its length. In some sections the roadway has wide travel lanes; however, the travel lanes become narrower along the southern portion of the road as it approaches Las Positas Road.

*Cliff Drive (State Route 225)* is an east-west facility that extends through the southern portion of the City of Santa Barbara from Marina Drive to Montecito Street. The segment west of Las Positas Road generally consists of one travel lane in each direction and the land uses it serves are primarily residential in nature. East of Las Positas Road, this facility widens to four lanes and is a continuation of State Route 225. The land uses along this section are a mixture of residential and commercial.

## Description of Existing Intersections

In conjunction with City of Santa Barbara staff, the study area for the traffic analysis was developed based on the projected number of peak-hour and daily trips that the project is expected to generate and the distribution patterns of those trips on the area streets and highways. The City's standard procedure is to evaluate intersections where five or more project trips are expected to enter the intersection. For the Valle Verde project, 5 trips in the AM peak hour are 62.5 percent of the 8 additional trips generated during that hour. During the PM peak hour 5 trips are 42.5 percent of the 12 additional PM project trips. As shown in Table 3, 11 intersections were identified as potential affected locations. Of those, only four intersections will experience enough project traffic to require analysis based on the City's criteria. The Project trip generation will be discussed later in this report.

The four intersections selected for this analysis are:

- Calle de los Amigos at Modoc Road
- Via Senda at Modoc Road
- Via Senda at Las Palmas Drive
- South La Cumbre Road at US-101 Southbound Ramps

Figure 3 illustrates the existing intersection lane configurations for the four analyzed intersections. A brief description of each study intersection follows.

Table 3: Intersections Requiring Capacity Analysis

| Intersection | Percent of Peak Hour Project Traffic Entering Intersection[1] | | Percent Required to Generate 5 Vehicles | | Meets Analysis Threshold | |
|---|---|---|---|---|---|---|
| | AM | PM | AM | PM | AM | PM |
| US-101 Northbound On-Ramp/Earl Warren Showgrounds Entrance at Calle Real; | 0 | 0 | 62.5 | 42.5 | No | No |
| Las Positas Road at Calle Real; | 25 | 25 | 62.5 | 42.5 | No | No |
| Las Positas Road at US-101 Southbound Ramps; | 40 | 40 | 62.5 | 42.5 | No | No |
| Las Positas Road at Modoc Road; | 40 | 40 | 62.5 | 42.5 | No | No |
| Las Positas Road at Cliff Drive. | 10 | 10 | 62.5 | 42.5 | No | No |
| Calle de los Amigos at Modoc Road | 70 | 70 | 62.5 | 42.5 | **Yes** | **Yes** |
| Via Senda at Modoc Road | 50 | 50 | 62.5 | 42.5 | No | **Yes** |
| Via Senda at Las Palmas Drive | 45 | 45 | 62.5 | 42.5 | No | **Yes** |
| South La Cumbre Road at US-101 Southbound Ramps | 45 | 45 | 62.5 | 42.5 | No | **Yes** |
| South La Cumbre Road at Calle Real | 25 | 25 | 62.5 | 42.5 | No | No |
| South Hope Avenue and US-101 Northbound Ramps at Calle Real | 20 | 20 | 62.5 | 42.5 | No | No |

[1] – Percentage shown represents the average of the inbound and outbound percentage of project traffic at each intersection as illustrated in Figure 5.

*Calle de los Amigos at Modoc Road* is a stop sign controlled T-intersection with the Calle de los Amigos approach stop controlled. The Calle de los Amigos approach has one wide lane that allows for simultaneous right and left turns. The westbound approach of Modoc Road has one through lane in each direction and a single striped left-turn lane.

*Via Senda at Modoc Road* is an all-way stop sign controlled T-intersection located at the southern terminus of Via Senda. The northbound Via Senda approach has one shared left-turn/right-turn lane. The eastbound approach of Modoc Road has one shared through/right-turn lane, while the westbound approach has one shared through/left-turn lane. There are bike lanes through the intersection along Modoc Road.

*Via Senda at Las Palmas Drive* an all-way stop sign controlled T-intersection located at the northern terminus of Via Senda. The southbound Via Senda approach has one shared left-turn/right-turn lane. The eastbound approach of Las Palmas Drive has one shared through/left-turn lane, while the westbound approach has one right-turn lane and one trough lane. There are bike lanes entering the intersection on westbound Las Palmas Drive. The other intersection approaches do not have dedicated bike lanes.

*Las Palmas Drive at US-101 Southbound Ramps* is a traffic signal controlled intersection with protected left-turn phasing on the southbound approach. The northbound approach to the intersection has two through lanes and one right-turn lane. The southbound approach is striped to provide one through lane and two left-turn lanes. The eastbound approach consists of one left-turn lane, one shared through/left-turn lane and one right-turn lane.

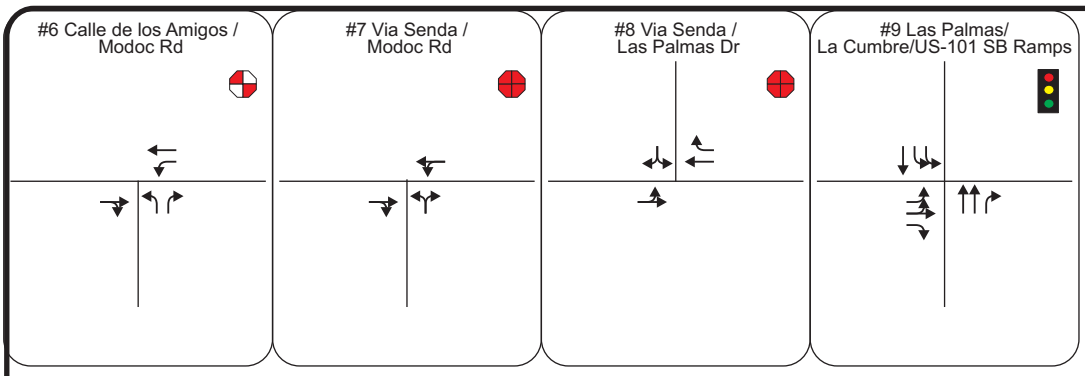


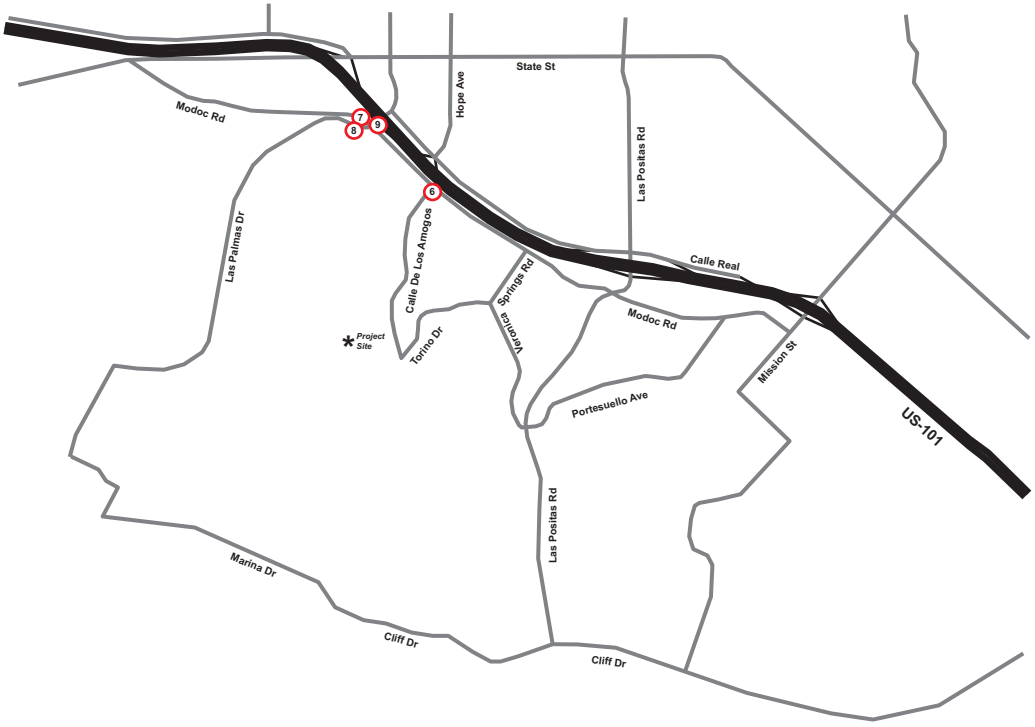


## Legend

- 1 - Study Intersection
- Signalized Intersection
- All-way Stop
- Two-way Stop

NOT TO SCALE

ITERIS

**FIGURE 3**
**Existing Lane Configurations**
**Valle Verde Home Project TIA**

## Existing Transit Operations

The Santa Barbara Metropolitan Transit District (MTD) operates several transit lines that serve the area with destinations such as downtown Santa Barbara and Goleta and the University of California at Santa Barbara (UCSB) to the west. MTD Route 5 – Mesa / La Cumbre is the only route that travels through the study area, utilizing Las Positas Road from Veronica Springs Road to Cliff Drive and Cliff Drive from Las Positas Road to the downtown transit center. Service is provided weekdays, Saturdays and Sundays with buses traveling on 60 minute headways.

## Existing Bicycle Facilities

Several on-street bicycle facilities are located along the roadways located in the study area. These facilities provide bicycle connections to the rest of the Santa Barbara region through an interconnected network of bicycle paths, lanes and routes. Class II bike lanes are provided along Modoc Road (Cross Town Route), Calle Real, Las Positas Road and Cliff Drive (Coast Route).

# TRAFFIC OPERATIONS ANALYSIS METHODOLOGY

Traffic operating conditions in the vicinity of the project were analyzed using two methodologies. At the signalized intersection, per the City of Santa Barbara guidelines, the "Intersection Capacity Utilization" (ICU) methodology was used to provide the primary analysis results. However, per the City's and Caltrans' request the Highway Capacity Manual (HCM) delay-based methodology for signalized intersections was also used to provide a more dynamic operational comparison. The HCM stop-controlled methodology, which is also delay based, was used for the unsignalized intersections of Via Senda with Modoc Road and Las Palmas Drive, and Calle de los Amigos with Modoc Road.

The ICU methodology compares the amount of traffic a through or turn lane is able to process (the capacity) to the level of traffic during the peak hours (volume). The critical volume-to-capacity (V/C) ratios for each intersection approach are combined to determine the ICU value (V/C ratio) for the entire intersection. The HCM method for both signalized and stop sign-controlled intersections calculates the average delay, in seconds, per vehicle for each approach and for the intersection as a whole during the peak hour.

For the unsignalized intersections, the level of service is determined by calculating the amount of delay experienced by vehicles attempting to enter the roadway from a controlled approach or movement. Three main factors are used in the delay calculations: the availability of adequate space, or "gap", in the flow of uncontrolled traffic for a waiting vehicle to safely enter from the controlled approach; the entering driver's judgment as to which gaps they consider acceptable; and the amount of time a driver spends waiting for the drivers before them to select an appropriate gap and move into the passing traffic flow. For vehicles making a right turn into the traffic flow, drivers are only required to select a gap in the traffic flow for the lane in which they intend to merge. If a vehicle is attempting to make a left turn from a controlled approach, the driver must now find an adequate gap in the traffic flows in both directions.

The efficiency of traffic operations on a roadway is measured in terms of Level of Service (LOS). The LOS concept for intersections is a measure of average operating conditions during an hour. It is based on either a V/C ratio (ICU methodology) or average vehicular delay (HCM methodology) for signalized locations and average delay for stop-controlled intersections. Levels range from A to F with A representing excellent (free-flow) conditions and F representing extreme congestion. Intersections where vehicular volumes are at or near capacity and/or intersection operations are inefficient drivers can experience greater congestion (higher V/C ratios) and longer vehicle delays. Because traffic flow on arterial street networks is most constrained at intersections, detailed traffic flow analyses focus on the operating conditions of critical intersections during peak travel periods.

Table 4 describes the level of service concept and the operating conditions expected for signalized intersections under each level of service. Table 5 lists the LOS criteria for unsignalized intersections.

## City of Santa Barbara LOS Acceptable Limits

The City of Santa Barbara considers LOS C with a volume-to-capacity ratio of 0.77 as the minimum acceptable operating standard for signalized intersections. For unsignalized intersections, the City considers an average delay of 22 seconds per vehicle as the minimum standard.

Table 4: Signalized Intersection Level of Service Definitions

| LOS | Interpretation | Signalized Intersection Volume to Capacity (V/C) Ratio | HCM Intersection Average Delay (Seconds) |
|---|---|---|---|
| A | Excellent operation. All approaches to the intersection appear quite open, turning movements are easily made, and nearly all drivers find freedom of operation. | 0.000 - 0.600 | < 10 |
| B | Very good operation. Many drivers begin to feel somewhat restricted within platoons of vehicles. This represents stable flow. An approach to an intersection may occasionally be fully utilized and traffic queues start to form. | 0.601 - 0.700 | >10 and < 20 |
| C | Good operation. Occasionally backups may develop behind turning vehicles. Most drivers feel somewhat restricted. | 0.701 - 0.800 | >20 and < 35 |
| D | Fair operation. There are no long-standing traffic queues. This level is typically associated with design practice for peak periods. | 0.801 - 0.900 | >35 and < 55 |
| E | Poor operation. Some long standing vehicular queues develop on critical approaches. | 0.901 - 1.000 | >55 and < 80 |
| F | Forced flow. Represents jammed conditions. Backups from locations downstream or on the cross street may restrict or prevent movements of vehicles out of the intersection approach lanes; therefore, volumes carried are not predictable. Potential for stop and go type traffic flow. | Over 1.000 | > 80 |

Source: Highway Capacity Manual, Special Report 209, Transportation Research Board, Washington D.C., 2000.

Table 5: Stop Sign-Controlled Intersection Level of Service Definitions

| LOS | Intersection Delay in Seconds |
|---|---|
| A | ≤ 10 |
| B | > 10 and ≤ 15 |
| C | > 15 and ≤ 25 |
| D | > 25 and ≤ 35 |
| E | > 35 and ≤ 50 |
| F | > 50 |

Source: Highway Capacity Manual, Special Report 209, Transportation Research Board, Washington D.C., 2000.

## Threshold of Significance

Significant traffic impacts are determined based on a threshold of significance set by the lead agency conducting the environmental review. The City of Santa Barbara has established the following threshold criteria to determine if a project has a significant traffic impact:

**Project-Specific Threshold.** The City's project-specific impact threshold states that if a development project would cause the V/C ratio at a signalized intersection to exceed 0.77, or if the project would increase the V/C ratio by 0.01 at a signalized intersection which already exceeds 0.77, the project's impact is considered significant. For unsignalized intersections, a significant impact is considered to have occurred if a project increases the amount of traffic traveling through an intersection by greater than one percent.

**Cumulative Threshold.** The City's cumulative impact threshold states that a significant cumulative impact would occur if a development project would contribute traffic to a signalized intersection that is forecast to operate above V/C 0.77 with cumulative traffic, or would contribute traffic to an unsignalized intersection that is forecast to operate with more than 22 seconds of delay.

## EXISTING TRAFFIC OPERATIONS ANALYSIS

Turning movement traffic counts for the intersections of Via Senda and Calle de los Amigos with Modoc Road and Via Senda with Las Palmas Drive were conducted on January 13, 2010. The counts were conducted from 7:00 – 9:00 a.m. and 4:00 - 6:00 p.m. The counts for the intersection of South La Cumbre Road with the US-101 Southbound Ramps were conducted on March 13, 2008 during the same hours. The traffic impact analysis was based on the highest single hour of traffic (during the AM and PM peak periods) at each location. **Figure 4** shows the existing weekday morning and evening peak hour traffic volumes. The traffic count sheets are provided in **Appendix A.**

The existing weekday morning and evening peak hour peak hour level of service analyses were conducted for the four intersections based on the measured traffic volumes and the methodologies described previously. The analyses are performed using the TRAFFIX (Traffic Impact Analysis) software program. The existing conditions level of service analysis results are summarized in **Table 6** for the weekday morning and evening peak hours.

**Table 6: LOS Analysis – Existing Conditions**

| Intersection | Weekday AM Peak Hour | | | | Weekday PM Peak Hour | | | |
|---|---|---|---|---|---|---|---|---|
| | ICU | | HCM | | ICU | | HCM | |
| | LOS | V/C | LOS | Avg. Delay (sec) | LOS | V/C | LOS | Avg. Delay (sec) |
| Calle de los Amigos at Modoc Road[a] | | | B | 12.8 | | | B | 14.9 |
| Via Senda at Modoc Rd[a] | | | A | 9.6 | | | B | 11.9 |
| Via Senda at Las Palmas Dr[a] | | | B | 12.9 | | | B | 11.9 |
| S La Cumbre Rd at Route 101 SB Ramps | A | 0.506 | C | 26.1 | A | 0.568 | C | 27.3 |

Note: [a] intersection controlled by stop sign; values represent average delay in seconds.
ICU = Intersection Capacity Utilization, HCM = Highway Capacity Manual, LOS = Level of Service, Avg. Delay = Average Vehicle Delay (Seconds), V/C = Volume-to-Capacity Ratio
Both ICU and HCM results are shown for signalized intersections, while only HCM results are shown for stop sign controlled intersections.

Based on the City of Santa Barbara acceptable operations thresholds, the results of the existing conditions analysis shown in **Table 6** indicate that all four of the analyzed intersections are currently operating at acceptable levels of service during the peak hours.

The detailed level of service worksheets for the above analyses are included in **Appendix B**.

It should be noted that the amount of delay calculated and shown in **Table 6** may be more or less than what an individual driver may actually experience. The conditions listed above reflect the average delay over the entire hour and may be affected within that hour by peaking of traffic flows, area traffic signal timings, and side street activity.

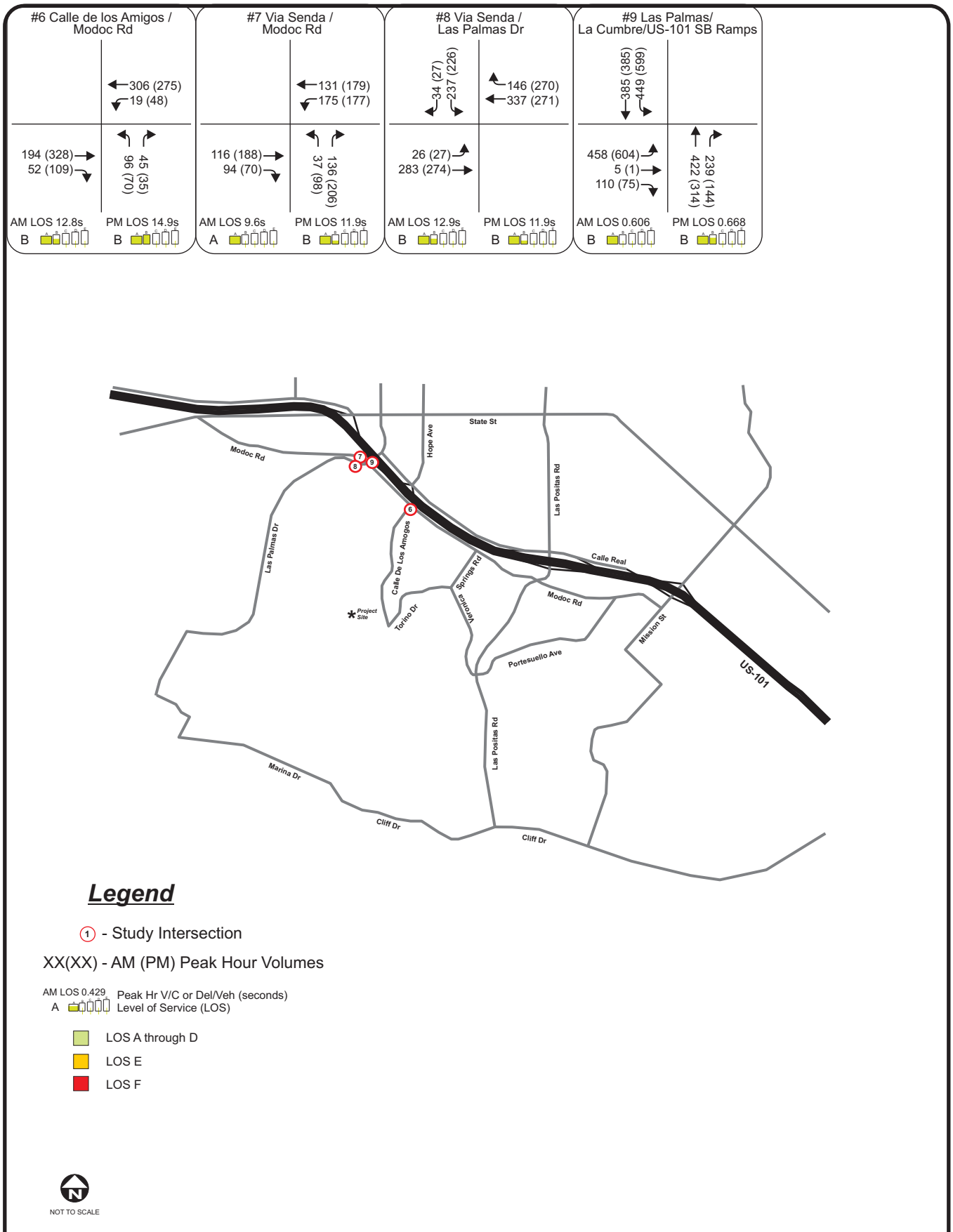


ITERIS

**FIGURE 4**
**Existing Peak-Hour Traffic Volumes**
**Valle Verde Home Project TIA**

# PROPOSED PROJECT AND CUP BUILDOUT TRAFFIC CHARACTERISTICS

This section evaluates the traffic operations for the Project. The section also evaluates the impacts related to an alternative redevelopment scenario on the project site that is mutually exclusive of the Project and is evaluated later in the section as an alternative Without-Project scenario. That alternative scenario includes the buildout of the previously approved and constructed CUP. Since these two scenarios are mutually exclusive developments and would not both be developed, the analysis only considers one scenario at a time. And, since the project applicant is not proposing the CUP buildout as part of this application, it is not evaluated as a project alternative, but rather as an alternative No Project condition.

## Proposed Project Scenario

The Project, which as previously outlined, would result in a net increase of 33 residential units along with other maintenance and site-supporting uses. In addition to the net increase in residential units, the Project includes the expansion of other support facilities on the site, two additional bed and breakfast units, four assisted living beds, and other site-serving uses including a small bank branch office to serve residents and employees, expanded food service space, and expanded office space.

## CUP Buildout Scenario

The CUP buildout scenario includes the residential unit increase that would result if the applicant were to build out under the previously approved and constructed Conditional Use Permit. This would add approximately 40 independent living units to the project site, returning the independent unit count to previously approved and historic levels. The 40 units would be provided by making interior modifications to existing structures. This scenario could be implemented by obtaining a building permit and no discretionary approvals would be required.

## Trip Generation

The trip generation for each development scenario is based on the type of land use included and trip rates published by the Institute of Transportation Engineers (ITE) in their *Trip Generation, An ITE Informational Report, 8th Edition*. Because of the mix of uses currently on the site and the difficulty in identifying which trips are generated by each individual use, it was not possible to develop a specific trip rate that would replicate each individual use on the site. Therefore, an aggregate rate developed from several similar project sites was used.

### Proposed Project

After a review of development types and the uses proposed as part of the Project, the trip rate for Continuing Care Retirement Community (CCRC) was chosen as the development type that most represents the changes proposed for the Valle Verde site. The ITE description for CCRCs is “they are land uses that provide multiple elements of senior adult living. CCRCs combine aspects of independent living with increased care, as lifestyle needs change with time. Housing options may include various combinations of senior adult (detached), senior adult (attached), congregate care, assisted living and skilled nursing care aimed at allowing the residents to live in one community as their medical needs change. The communities may also contain special services such as medical,

dining, recreational and some limited, supporting retail facilities. CCRCs are usually self-contained villages." The trip rate is based on the number of residential units being provided.

Much of the proposed project would result in the expansion of existing uses and/or facilities intended for use by residents or existing staff only. Some of the proposed uses, such as the on-site branch bank office, would be new uses on the site and would reduce the number of off-site trips by new and existing residents by allowing residents to use facilities that are within walking distance rather than having to drive to off-site locations. Therefore, some of the additional trips generated by the proposed project would be offset by the reduced number of off-site trips.

Iteris has also reviewed the employment data provided by the project applicant and based on the employee shift times and the FTE staff hours it does not appear that the proposed project will be adding a substantial number of additional staff.

A summary of the weekday and ADT volumes for the future Project-related vehicle trips is presented in Table 7.

CUP Buildout

For the CUP buildout scenario the applicant would reconstruct 40 senior residential units within the existing facilities to approved and historic levels. For this scenario no new buildings would be constructed and no discretionary permit would be required. Based on discussions with City staff, the CCRC trip rate was used to estimate additional future trips generated by the replaced units in order to provide a common base for comparing the two development scenarios.

A summary of the weekday and ADT volumes for the future CUP Buildout-related vehicle trips is also presented in Table 7.

## Trip Distribution and Assignment

A geographic distribution of the vehicle trips generated by the proposed uses was developed and is shown in Figure 5. The distribution of vehicle trips is based on the location of specific types of uses, such as residential neighborhoods and commercial centers, as well as the overall connectivity of the roadway system. Origin and destination assumptions were then developed, in coordination with City of Santa Barbara staff, for vehicles traveling to and from the site. Based on these assumptions, the vehicle trips generated by the proposed uses were then assigned to specific study intersections they would traverse on the surrounding roadway network.

Subsequent to the City estimating the project-related trip distribution characteristics, which were not shared with the project applicant, the applicant provided to the City the results of an independent employee traffic survey. The results of the employee survey are provided in Appendix C. The survey results indicated project-related trip distribution characteristics that are very similar to the trip distribution assumptions developed for this analysis.

The added trips for the Project scenario are shown in Figure 6. The added trips for the CUP Buildout scenario are presented in Figure 7.

## Table 7: Valle Verde Proposed Project Trip Generation

| Land Uses | ITE Code | Units Size | Type | Daily Rate | Daily Trips | Daily In | Daily Out | AM Peak Hour Rate | AM Peak Hour Trips | AM Peak Hour In | AM Peak Hour Out | PM Peak Hour Rate | PM Peak Hour Trips | PM Peak Hour In | PM Peak Hour Out |
|---|---|---|---|---|---|---|---|---|---|---|---|---|---|---|---|
| **Proposed Project** | | | | | | | | | | | | | | | |
| ***Added Land Uses*** | | | | | | | | | | | | | | | |
| Continuing Care Retirement Community | 255 | 40 | d.u. | 2.81 | | 0.5 | 0.5 | 0.18 | | 0.64 | 0.36 | 0.29 | | 0.48 | 0.52 |
| | | | | | 112 | 56 | 56 | | 7 | 4 | 3 | | 12 | 6 | 6 |
| Assisted Living | 255 | 4 | beds | 2.81 | | 0.5 | 0.5 | 0.18 | | 0.64 | 0.36 | 0.29 | | 0.48 | 0.52 |
| | | | | | 12 | 6 | 6 | | 1 | 1 | 0 | | 1 | 0 | 1 |
| Bed and Breakfast | (a) | 2 | rooms | 4.00 | | 0.5 | 0.5 | 1.00 | | 0.00 | 1.00 | 1.50 | | 0.67 | 0.33 |
| | | | | | 8 | 4 | 4 | | 2 | 0 | 2 | | 3 | 2 | 1 |
| Total Added Project-Related Trips | | | | | ***132*** | ***66*** | ***66*** | | ***10*** | ***5*** | ***5*** | | ***16*** | ***8*** | ***8*** |
| ***Removed Land Uses*** | | | | | | | | | | | | | | | |
| Rutherford House | 210 | 1 | d.u. | 9.57 | | 0.5 | 0.5 | 0.75 | | 0.25 | 0.75 | 1.01 | | 0.63 | 0.37 |
| | | | | | 10 | 5 | 5 | | 1 | 0 | 1 | | 1 | 1 | 0 |
| Hospice | 620 | 2,105 | s.f. | 2.37 | | 0.5 | 0.5 | 0.17 | | 0.64 | 0.36 | 0.22 | | 0.33 | 0.67 |
| (Nursing Home) | | | | | 6 | 3 | 3 | | 0 | 0 | 0 | | 1 | 0 | 1 |
| Senior Adult Housing - Attached | 255 | 6 | d.u. | 2.81 | | 0.5 | 0.5 | 0.18 | | 0.64 | 0.36 | 0.29 | | 0.48 | 0.52 |
| | | | | | 18 | 9 | 9 | | 1 | 1 | 0 | | 2 | 1 | 1 |
| Total Removed Project-Related Trips | | | | | ***-34*** | ***-17*** | ***-17*** | | ***-2*** | ***-1*** | ***-1*** | | ***-4*** | ***-2*** | ***-2*** |
| **Proposed Project - Net New Trips** | | | | | **98** | **49** | **49** | | **8** | **4** | **4** | | **12** | **6** | **6** |
| **CUP Buildout** | | | | | | | | | | | | | | | |
| Senior Adult Housing - Attached | 255 | 40 | d.u. | 2.81 | | 0.5 | 0.5 | 0.18 | | 0.64 | 0.36 | 0.29 | | 0.48 | 0.52 |
| **CUP Buildout - Net New Trips** | | | | | **112** | **56** | **56** | | **7** | **4** | **3** | | **12** | **6** | **6** |
| **Difference (Proposed Project - CUP)** | | | | | **-14** | **-7** | **-7** | | **1** | **0** | **1** | | **0** | **0** | **0** |

Source: Iteris, Inc.; ITE 2009
(a) - Trip rates assume 1 inbound and 1 outbound trip for arrival and departure and 1 inbound and 1 outbound for a recreational trip per room. Additional rooms
Additional rooms are assumed to be staffed and serviced by existing facilties staff, so no additional non-guest trips are added for these two rooms.

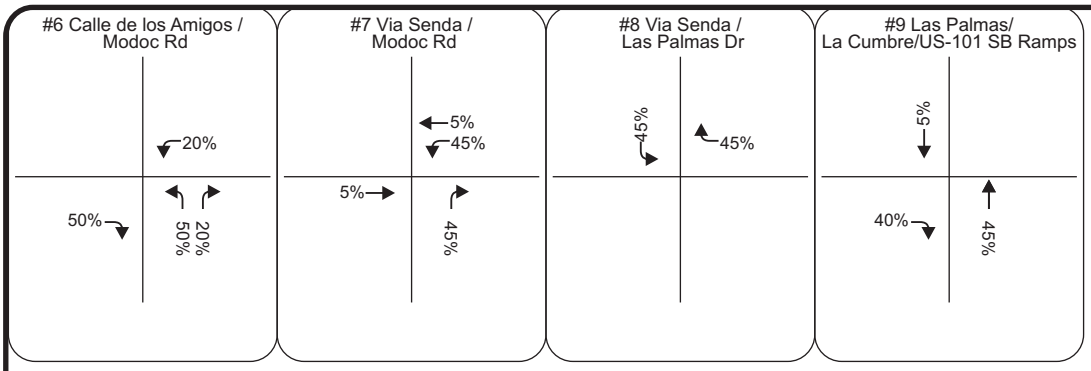


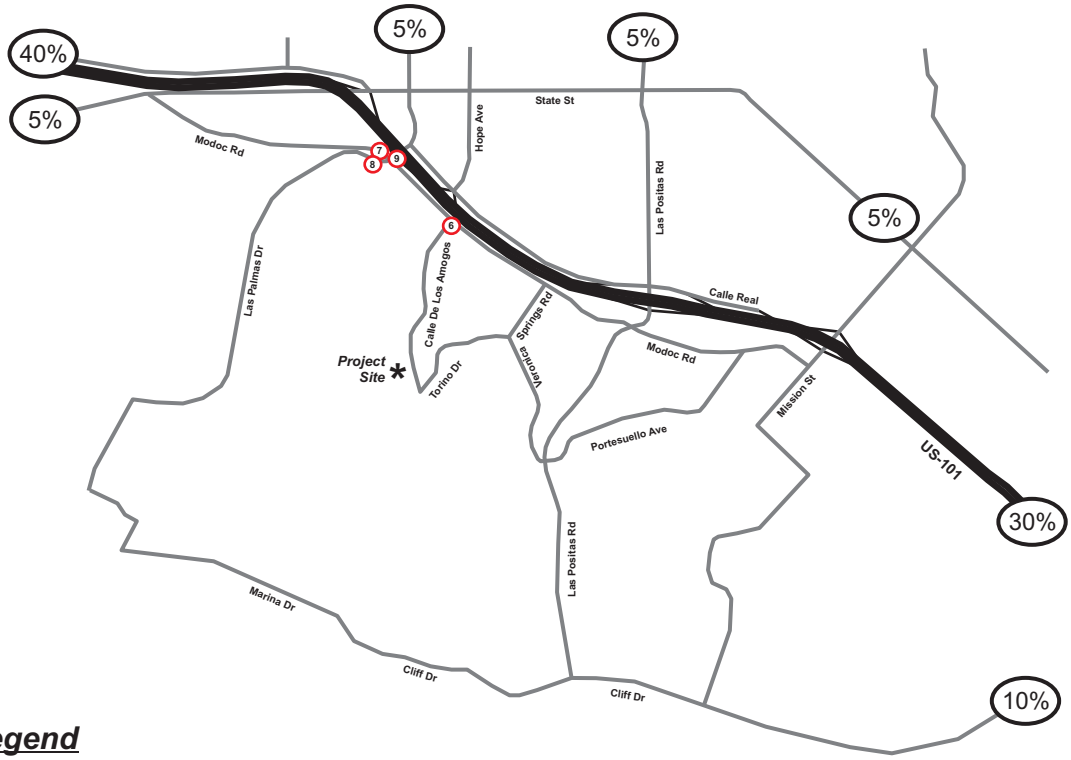


## Legend

1 - Study Intersection

XX(XX) - AM (PM) Peak Hour Volumes

NOT TO SCALE

ITERIS

**FIGURE 5**
**Proposed Project Trip Distribution**
**Valle Verde Home Project TIA**

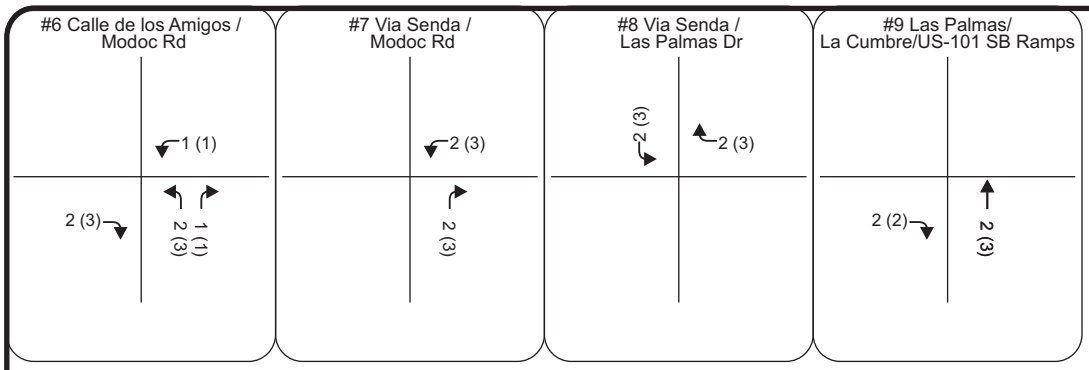


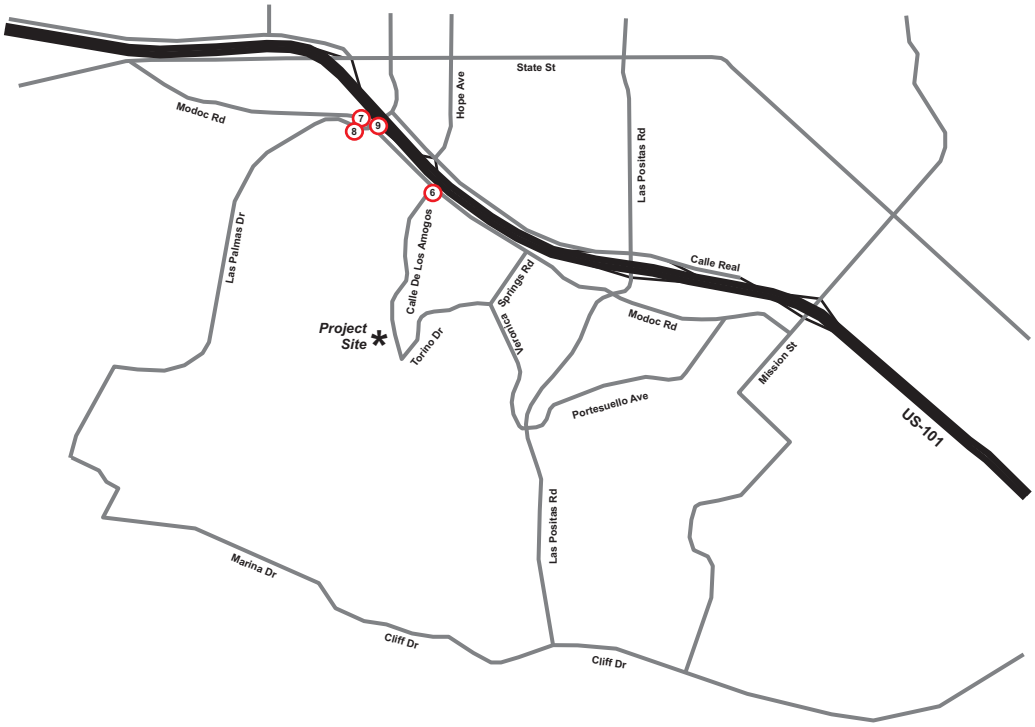


## Legend

1 - Study Intersection

XX(XX) - AM (PM) Peak Hour Volumes

NOT TO SCALE

ITERIS

**FIGURE 6**

**Proposed Project Only Peak-Hour Traffic Volumes**

**Valle Verde Home Project TIA**

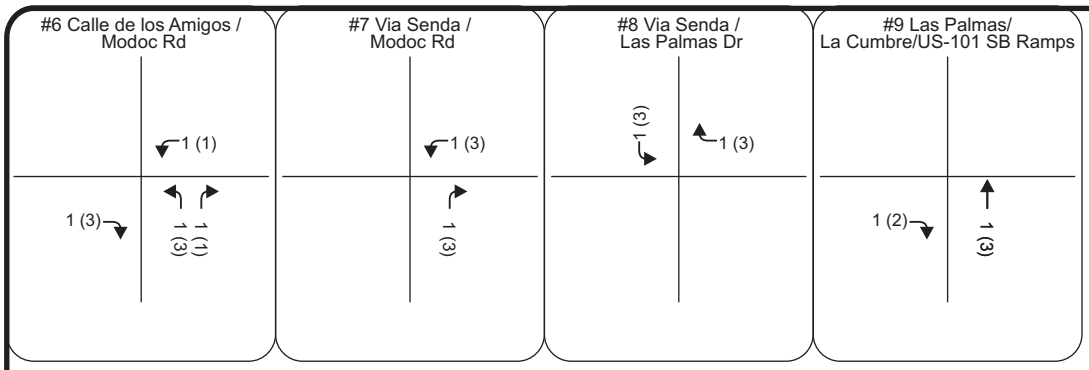


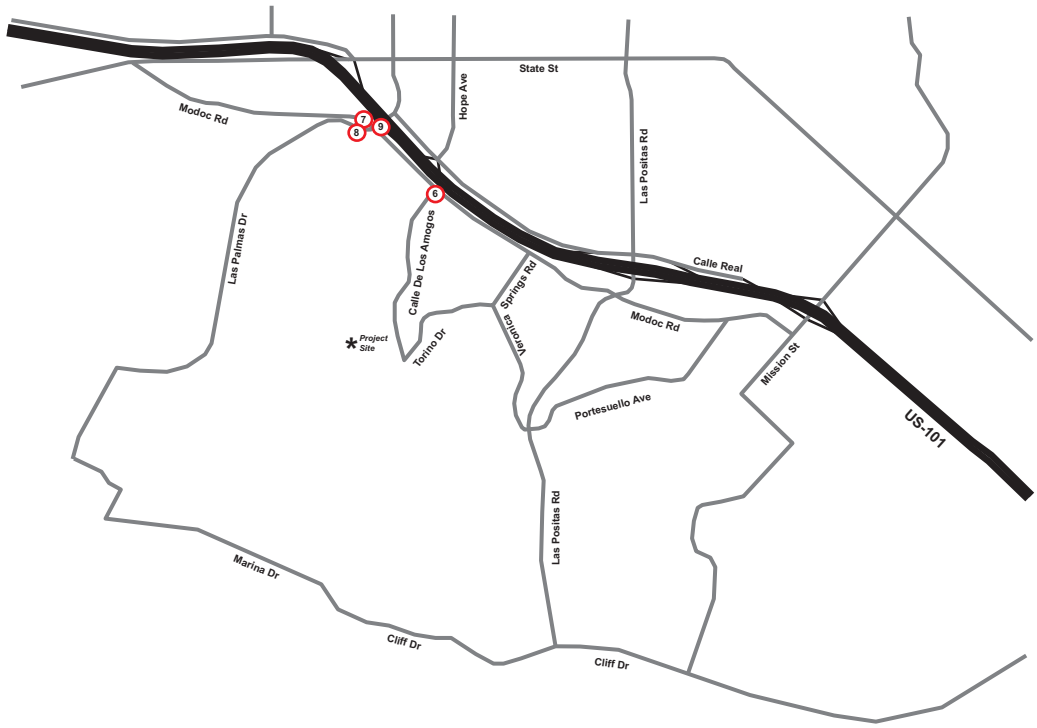


## *Legend*

(1) - Study Intersection

XX(XX) - AM (PM) Peak Hour Volumes

NOT TO SCALE

ITERIS

**FIGURE 7**
**CUP Buildout Added Peak-Hour Traffic Volumes**
**Valle Verde Home Project TIA**

# FUTURE WITHOUT PROJECT TRAFFIC OPERATIONS ANALYSIS

To evaluate the potential impact of the proposed project on future traffic conditions, it is first necessary to develop a forecast of future traffic volumes in the study area under conditions without the proposed project. This provides a basis against which to measure the potential impacts of the proposed project.

The anticipated buildout year of the proposed project has been estimated to be no later than 2013. Therefore, to provide a conservative estimate of the potential project-related impacts a future traffic horizon year of 2013 was selected. The projection of the future without project traffic consists of existing traffic plus ambient traffic growth (general background regional growth). For the Without Project analysis, the base traffic conditions at the horizon year need to be identified as those will be the conditions against which the Project is assessed to determine if it will create a significant impact. Those base conditions include the existing traffic volumes plus traffic from general regional or ambient growth.

Traffic growth from identified cumulative projects will be discussed and analyzed later in this report.

## Ambient Traffic Growth

Ambient traffic growth is the traffic growth that will occur in the study area due to general employment growth, housing growth and growth in regional through trips. Even if there was no change in housing or employment in the City of Santa Barbara, there will be some background (ambient) traffic growth in the region. Per the City of Santa Barbara staff, a 0.5 percent per year growth rate was assumed as a conservative estimate of traffic increase in the study area. The intersection traffic volumes were increased by 0.5 percent per year, or 2 percent total, to reach projected end of Year 2013 levels. The March 2008 traffic count volumes were increased by an additional one-half percent to account for ambient traffic growth from the year 2008 to 2013.

## Future Without Project Traffic Analysis

The Future Without Project traffic operating conditions were analyzed at the four study area intersections for the weekday AM and PM peak hours. **Figure 8** illustrates the future without project peak hour traffic volumes. Based on future without project traffic forecasts, the levels of service at the intersection were calculated and are shown in **Table 8.** As shown in the table, intersection delays are expected to increase slightly by Year 2013. However, all of the intersections are expected to operate at good levels of service. The detailed level of service worksheets for the intersections are included in **Appendix B**.

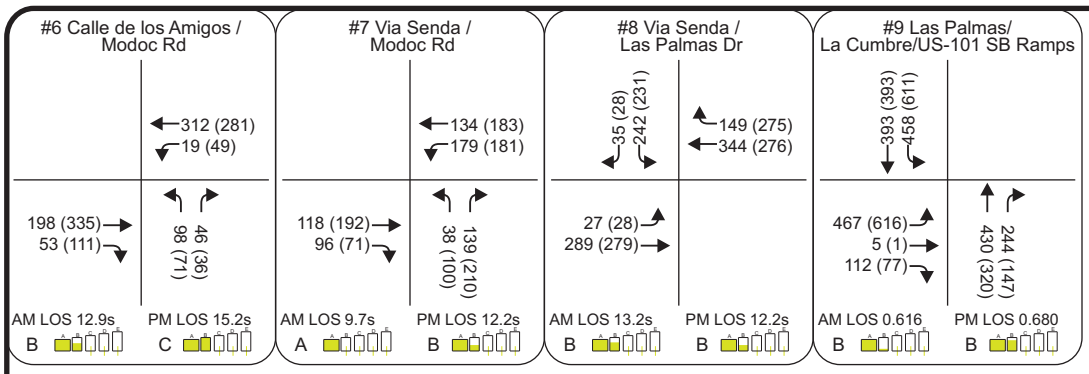


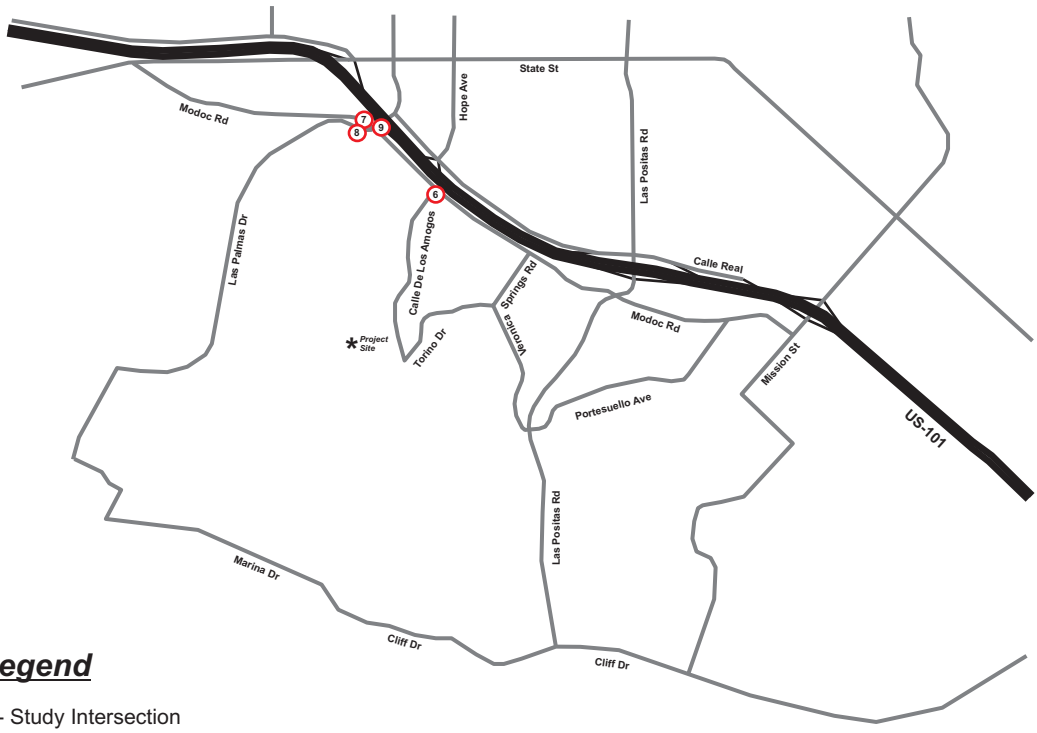


## Legend

1 - Study Intersection

XX(XX) - AM (PM) Peak Hour Volumes

AM LOS 0.429 — Peak Hr V/C or Del/Veh (seconds)
A — Level of Service (LOS)

- LOS A through D
- LOS E
- LOS F

N

NOT TO SCALE

ITERIS

**FIGURE 8**
**Future Without Project Peak-Hour Traffic Volumes**
**Valle Verde Home Project TIA**

Table 8: LOS Analysis – Future Without Project

| Intersection | Weekday AM Peak Hour | | | | Weekday PM Peak Hour | | | |
|---|---|---|---|---|---|---|---|---|
| | ICU | | HCM | | ICU | | HCM | |
| | LOS | V/C | LOS | Avg. Delay (sec) | LOS | V/C | LOS | Avg. Delay (sec) |
| Calle de los Amigos at Modoc Road[a] | - | - | B | 12.9 | - | - | C | 15.2 |
| Via Senda at Modoc Rd[a] | - | - | A | 9.7 | - | - | B | 12.2 |
| Via Senda at Las Palmas Dr[a] | - | - | B | 13.2 | - | - | B | 12.2 |
| S La Cumbre Rd at Route 101 SB Ramps | B | 0.616 | C | 26.2 | B | 0.680 | C | 27.5 |

Note: [a] intersection controlled by stop sign; values represent average delay in seconds.
ICU = Intersection Capacity Utilization, HCM = Highway Capacity Manual, LOS = Level of Service, Avg. Delay = Average Vehicle Delay (Seconds), V/C = Volume-to-Capacity Ratio
Both ICU and HCM results are shown of signalized intersections, while only HCM results are shown for stop sign controlled intersections.

## Future With CUP Buildout Analysis

In this section, the effects of the CUP Buildout scenarios are compared against the Without Project conditions described above. This comparison will help identify if the additional vehicle trips generated by the CUP Buildout scenario will worsen traffic operations at the analyzed intersections.

The development-related trips for the CUP Buildout were combined with the Future Without Project volumes presented in the previous section. These total volumes for each scenario provide the peak-hour volumes for the Future With CUP Buildout condition analysis.

The Future With CUP Buildout traffic operating conditions were analyzed at the four study intersections for the weekday AM and PM peak hours. **Figure 9** illustrates the Future With CUP Buildout project peak-hour traffic volumes at the four intersections. The levels of service at the four intersections were calculated and are shown in **Table 9.**

As shown in the table, intersection delays are expected to increase slightly by Year 2013. It is important to note that these results are shown only to indicate that the delay is expected to increase slightly between the With and Without CUP Buildout scenarios and does not indicate that any significant impacts would occur. The detailed level of service worksheets for the analyzed intersections are included in **Appendix B**.

## Table 9: LOS Analysis – Future With CUP Buildout Conditions

| Intersection | Future Without Project Conditions | | | | Future With CUP Buildout Conditions | | | | | |
|---|---|---|---|---|---|---|---|---|---|---|
| | Weekday AM Peak Hour | | Weekday PM Peak Hour | | Weekday AM Peak Hour | | | Weekday PM Peak Hour | | |
| | LOS | V/C or Avg Delay | LOS | V/C or Avg Delay | LOS | V/C or Avg Delay | Δ V/C | LOS | V/C or Avg Delay | Δ V/C |
| Calle de los Amigos at Modoc Road[(a)] | B | 12.9 | C | 15.2 | B | 13.0 | 0.1 | C | 15.4 | 0.2 |
| Via Senda at Modoc Rd[(a)] | A | 9.7 | B | 12.2 | A | 9.8 | 0.0 | B | 12.3 | 0.1 |
| Via Senda at Las Palmas Dr[(a)] | B | 13.2 | B | 12.2 | B | 13.2 | 0.0 | B | 12.2 | 0.0 |
| S La Cumbre Rd at Route 101 SB Ramps | B | 0.616 | B | 0.680 | B | 0.616 | 0.000 | B | 0.681 | 0.001 |

Note: [a] intersection controlled by stop sign; values represent average delay in seconds.
LOS = Level of Service, Delay = Average Vehicle Delay (Seconds)
V/C = Volume-to-Capacity Ratio for Signalized Intersections.

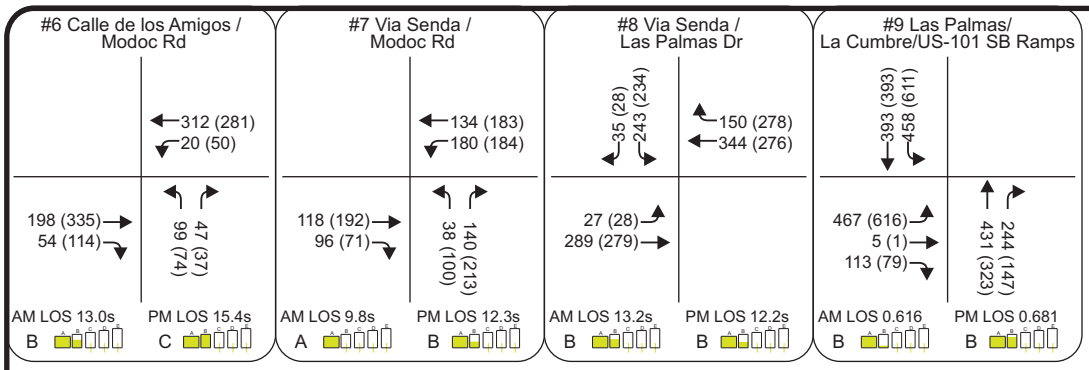


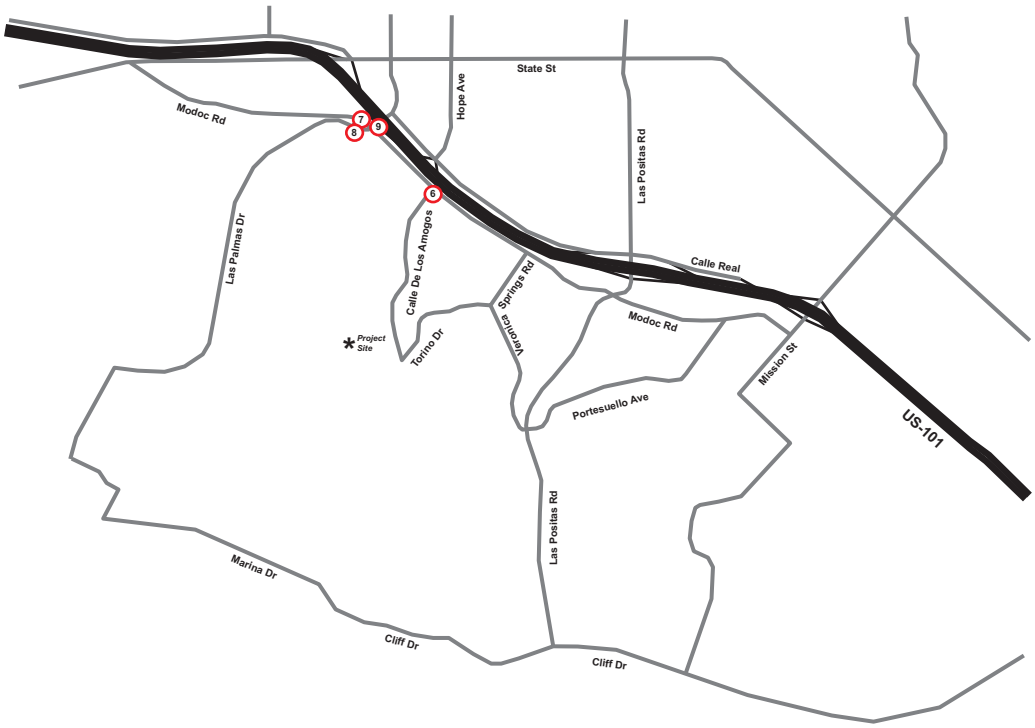


## Legend

1 - Study Intersection

XX(XX) - AM (PM) Peak Hour Volumes

AM LOS 0.429 Peak Hr V/C or Del/Veh (seconds)
A Level of Service (LOS)

LOS A through D

LOS E

LOS F

NOT TO SCALE

ITERIS

**FIGURE 9**

**Future With CUP Buildout Peak-Hour Traffic Volumes**

**Valle Verde Home Project TIA**

# FUTURE WITH PROJECT TRAFFIC OPERATIONS ANALYSIS

In this section, the effects of the Project will be compared against the previously discussed Without Project conditions. This comparison will help determine if the additional vehicle trips generated by the Project would result in significant traffic impacts. As previously noted, the Project is a development scenario that is mutually exclusive from the previously analyzed CUP Buildout scenario. Therefore, the With Project analysis does not contain the additional residential units that were included in the CUP Buildout scenario.

The development-related trips for the Project listed in Table 7 were combined with the Future Without Project volumes presented in the previous section. The combined assignment provides the peak-hour volumes for the Future With Project condition analysis. The total peak-hour volumes for the Future With Project scenario are shown in **Figure 10**.

## Future With Project Traffic Operations Analysis

The results of the Future With Project conditions level of service analysis are shown in **Table 10** for the weekday AM and PM peak hours.

**Table 10: LOS Analysis – Future With Project Conditions**

| Intersection | Future Without Project Conditions | | | | Future With Project Conditions | | | | | |
|---|---|---|---|---|---|---|---|---|---|---|
| | Weekday AM Peak Hour | | Weekday PM Peak Hour | | Weekday AM Peak Hour | | | Weekday PM Peak Hour | | |
| | LOS | V/C or Avg Delay | LOS | V/C or Avg Delay | LOS | V/C or Avg Delay | Δ V/C | LOS | V/C or Avg Delay | Δ V/C |
| Calle de los Amigos at Modoc Road[a] | B | 12.9 | C | 15.2 | B | 13.0 | 0.1 | C | 15.4 | 0.2 |
| Via Senda at Modoc Rd[a] | A | 9.7 | B | 12.2 | A | 9.8 | 0.0 | B | 12.3 | 0.1 |
| Via Senda at Las Palmas Dr[a] | B | 13.2 | B | 12.2 | B | 13.2 | 0.0 | B | 12.2 | 0.0 |
| S La Cumbre Rd at Route 101 SB Ramps | B | 0.616 | B | 0.680 | B | 0.616 | 0.000 | B | 0.681 | 0.001 |

Note: [a] intersection controlled by stop sign; values represent average delay in seconds.
LOS = Level of Service, Delay = Average Vehicle Delay (Seconds)
V/C = Volume-to-Capacity Ratio for Signalized Intersections.

When the Future With Project forecasts were analyzed, the results indicate that the addition of the Project traffic would create a small increase the delay intersections along Modoc Road. However, the project-related change in traffic conditions is not anticipated to generate any significant project-specific traffic impacts.

The conclusion is that the Project would have **no significant project-related impact** at any of the analyzed intersections.

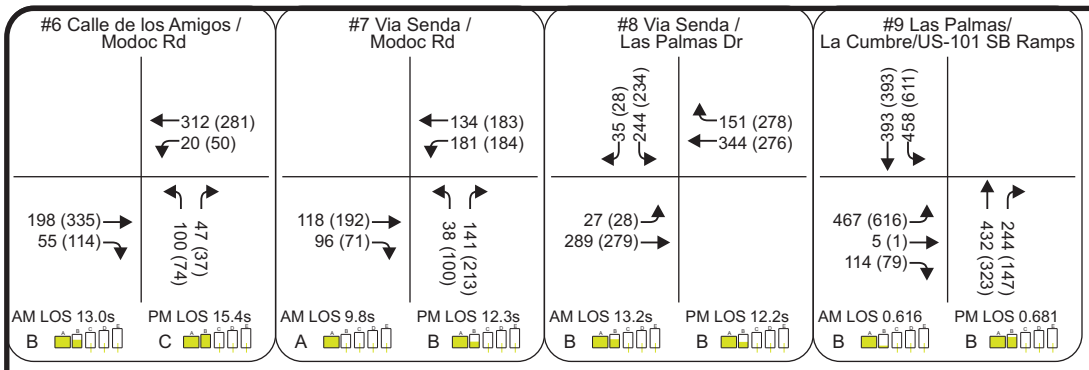

## Legend

1 - Study Intersection

XX(XX) - AM (PM) Peak Hour Volumes

AM LOS 0.429 Peak Hr V/C or Del/Veh (seconds)
A Level of Service (LOS)

LOS A through D

LOS E

LOS F

NOT TO SCALE

ITERIS

**FIGURE 10**
**Future With Project Peak-Hour Traffic Volumes**
**Valle Verde Home Project TIA**

## Comparison of Proposed Project Scenario Versus CUP Buildout Scenario

A comparison between the two land use scenarios is presented in **Table 11**. The comparison of the operating conditions from the two land use scenarios shows that the Project and the CUP Buildout scenarios would generate the same effect on V/C ratios and average delay at all of the study intersections.

**Table 11: Capacity Analysis Comparison – Project Versus CUP Buildout**

| Intersection | Weekday AM Peak Hour | | | |
|---|---|---|---|---|
| | Project | | CUP Buildout | |
| | V/C | Avg. Delay (sec) | V/C | Avg. Delay (sec) |
| Calle de los Amigos at Modoc Road[a] | - | 13.0 | - | 13.0 |
| Via Senda at Modoc Rd[a] | - | 9.8 | - | 9.8 |
| Via Senda at Las Palmas Dr[a] | - | 13.2 | - | 13.2 |
| S La Cumbre Rd at Route 101 SB Ramps | 0.616 | 26.2 | 0.616 | 26.2 |
| | | | | |
| **Intersection** | **Weekday PM Peak Hour** | | | |
| | **Project** | | **CUP Buildout** | |
| | **V/C** | **Avg. Delay (sec)** | **V/C** | **Avg. Delay (sec)** |
| Calle de los Amigos at Modoc Road[a] | - | 15.4 | - | 15.4 |
| Via Senda at Modoc Rd[a] | - | 12.3 | - | 12.3 |
| Via Senda at Las Palmas Dr[a] | - | 12.2 | - | 12.2 |
| S La Cumbre Rd at Route 101 SB Ramps | 0.681 | 27.5 | 0.681 | 27.5 |

Note: [a] intersection controlled by stop sign; values represent average delay in seconds.
ICU = Intersection Capacity Utilization, HCM = Highway Capacity Manual, LOS = Level of Service, Avg. Delay = Average Vehicle Delay (Seconds), V/C = Volume-to-Capacity Ratio
Both ICU and HCM results are shown of signalized intersections, while only HCM results are shown for stop sign controlled intersections.

# CUMULATIVE PROJECT TRAFFIC OPERATIONS ANALYSIS

To evaluate the potential cumulative impact of the Project on future traffic conditions, it is necessary to develop a forecast of the total future traffic volumes in the study area. This provides a basis against which to measure the potential cumulative impacts of the proposed project.

The anticipated buildout year of the proposed project has been estimated to be approximately 2013. The projection of the future without project traffic consists of existing traffic plus ambient traffic growth (general background regional growth) plus growth in traffic generated by specific cumulative projects expected to be completed by the year 2013. The component for background regional growth (ambient growth) was previously identified and included in the Without Project analysis.

## Cumulative Project Growth

Cumulative project traffic growth, which is growth due to specific, known development projects in the area immediately surrounding the study intersections, is included in the analysis of the future conditions. Based on information provided by the City of Santa Barbara, there are 14 projects located in the project area that are either currently under development or have recently received approval from the City Council. These projects are generally located either within a one-mile radius of the site or near the analyzed intersections.

Table 12 summarizes the location, type and size of land use for each of the projects. The general locations of the cumulative projects requiring specific analysis are shown in Figure 11.

Traffic generated by these projects was estimated based on standard trip generation data from the ITE's publication *Trip Generation, An ITE Informational Report, 8th Edition.* The estimated trip generation for each of the cumulative projects is summarized in Table 12. As shown, the cumulative projects are forecast to generate a total of approximately 531 and 772 trips during the weekday AM and PM peak hours, respectively. The trips expected from the cumulative projects were then assigned to the traffic model as part of the development of the Future With Cumulative Projects traffic projections. The resulting cumulative project trip assignments are illustrated in Figure 9.

## Table 12: Related Project Trip Generation Estimates

| Location (1) | | Description | Size | Weekday AM Peak Hour | | | Weekday PM Peak Hour | | |
|---|---|---|---|---|---|---|---|---|---|
| | | | | Tot | In | Out | Tot | In | Out |
| 1 | 1235 Veronica Springs Road (Hillside House) | Residential | 125 du | 55 | 9 | 46 | 65 | 44 | 21 |
| 2 | 15 S. Hope Ave. | Demolish 8,368 sq. ft. retail building. Construct new residences. | 16 du | -1 | -4 | 3 | -22 | -9 | -13 |
| 3 | 3714 State Street (Sandman) | Demolish 113-room hotel. Construct new mixed use project. | 73 du 13,075 office 1,537 sf commercial | -5 | -8 | 3 | -33 | -36 | 3 |
| 4 | 3757 State Street (Whole Foods) | Mixed Use (2) | 15 du 72,209 commercial/retail (13,884 net new) | -15 | -8 | -7 | 101 | 50 | 51 |
| 5 | 3820 State Street | Office | 10 du 30 Ksf | 112 | 98 | 14 | 108 | 18 | 90 |
| 6 | 900-1100 Las Positas Road (Veronica Meadows) | Residential | 25 du | 19 | 5 | 14 | 25 | 16 | 9 |
| 7 | 3885 State Street | Mixed Use | 10 30 Ksf Office | 13 | 6 | 7 | 14 | 7 | 7 |
| 8 | 3880 State Street | Mixed Use | 8 du 4,289 sf commercial (1,733 net new) | 9 | 4 | 5 | 22 | 11 | 11 |
| 9 | 4004 Via Lucero | Residential | 10 du | 6 | 1 | 5 | 7 | 5 | 2 |
| 10 | 4151 Foothill Road | Annexation and Commercial Office | 69,259 sf | 107 | 94 | 13 | 103 | 18 | 85 |
| 11 | 101 S. La Cumbre | Demolish gas station. Construct new bank building. | 3,332 sf (2,186 net new) | 7 | 4 | 3 | 19 | 9 | 10 |
| 12 | 215 Pesetas Lane | Medical clinic addition | 36,000 sf | 41 | 24 | 17 | 41 | 17 | 24 |
| 13 | 1298 Las Positas Rd. (Elings Park) | Park additions 14,803 and other non-building facilities (i.e., sports fields) | --- | 69 | 65 | 4 | 155 | 76 | 79 |
| 14 | 540 W. Pueblo Street | Residential | 6 du | 5 | 1 | 4 | 6 | 4 | 2 |
| | | Medical Office | 43.0 ksf | 109 | 88 | 21 | 161 | 43 | 118 |
| **Total** | | | | **531** | **379** | **152** | **772** | **273** | **499** |

Note: du = dwelling unit; ksf = 1,000 square feet.
Volumes represent the net number of trip ends assigned for each project based on the associated traffic studies for each project or approved EIR's
(1) Refer to Figure 11 for locations.
(2) The Whole Foods tenant improvements have been completed and the store is now occupied. However, the application for the proposed mixed use project has not been withdrawn and is still considered to be pending.

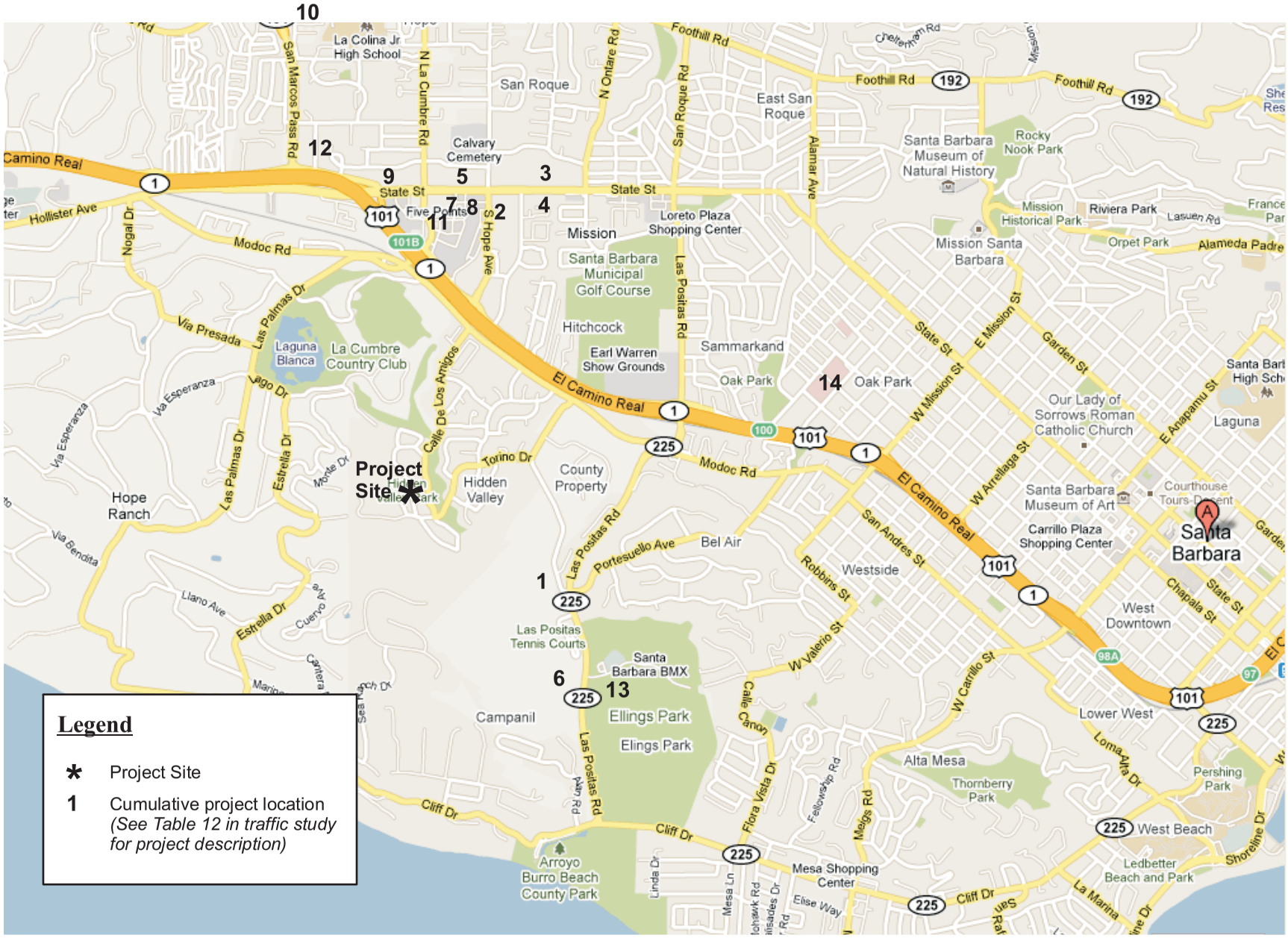


Figure 11
Related Project Locations
Valle Verde Home Project TIA

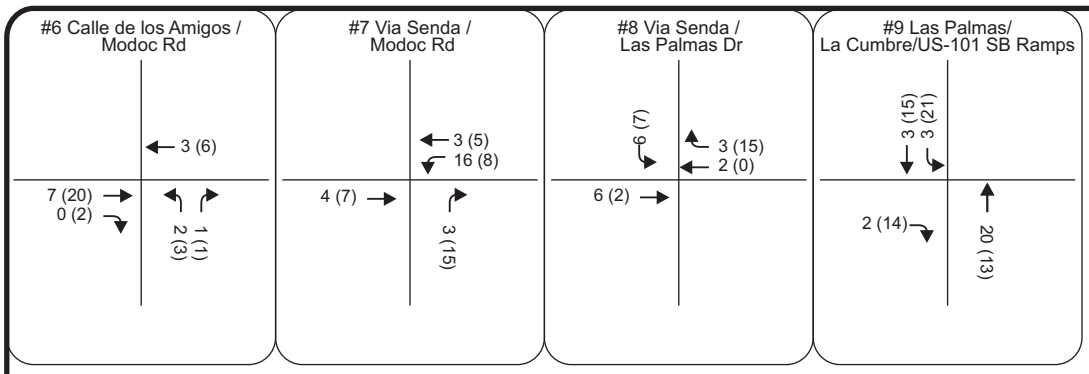


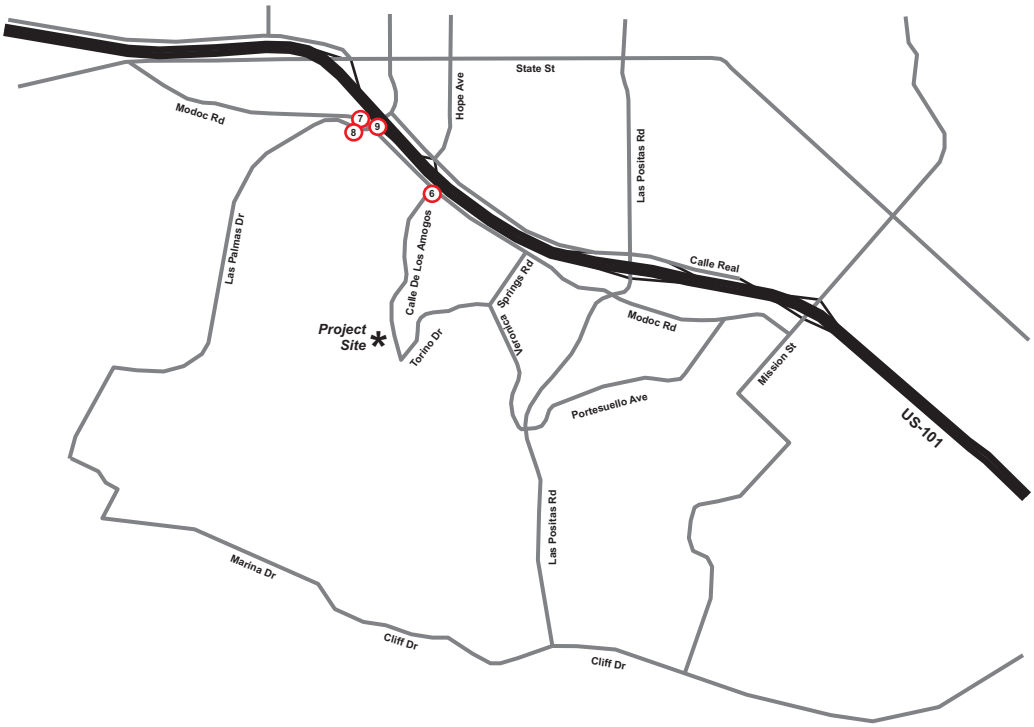


## Legend

1 - Study Intersection

XX(XX) - AM (PM) Peak Hour Volumes

NOT TO SCALE

ITERIS

**FIGURE 12**

**Cumulative Project Only Peak-Hour Traffic Volumes**

**Valle Verde Home Project TIA**

The cumulative project peak-hour traffic volumes shown in **Figure 12** were added to the Future With Project traffic volumes. The resulting "Cumulative With Project" traffic volumes are shown in **Figure 13**. These volumes represent the future traffic conditions including ambient growth and the traffic associated with the Project.

The City's cumulative impact threshold states that a significant cumulative impact would occur if a development project would contribute traffic to a signalized intersection that is forecast to operate above V/C 0.77 with cumulative traffic, or would contribute traffic to an unsignalized intersection that is forecast to operate with more than 22 seconds of delay. The intersection levels of service for the cumulative project conditions were calculated and the results summarized in **Table 13** for the weekday AM and PM peak-hour conditions.

**Table 13: LOS Analysis – Cumulative With Project Conditions**

| Intersection | Future With Project Conditions | | | | Cumulative Project Conditions | | | |
|---|---|---|---|---|---|---|---|---|
| | AM Peak Hour | | PM Peak Hour | | AM Peak Hour | | PM Peak Hour | |
| | LOS | V/C or Avg Delay | LOS | V/C or Avg Delay | LOS | V/C or Avg Delay | LOS | V/C or Avg Delay |
| Calle de los Amigos at Modoc Road[(a)] | B | 13.0 | C | 15.4 | B | 13.6 | C | 16.2 |
| Via Senda at Modoc Rd[(a)] | A | 9.8 | B | 12.3 | B | 10.0 | B | 12.8 |
| Via Senda at Las Palmas Dr[(a)] | B | 13.2 | B | 12.2 | B | 13.7 | B | 12.5 |
| S La Cumbre Rd at Route 101 SB Ramps | B | 0.616 | B | 0.681 | B | 0.617 | B | 0.693 |

Note: [a] intersection controlled by stop sign; values represent average delay in seconds.
LOS = Level of Service, Delay = Average Vehicle Delay (Seconds)
V/C = Volume-to-Capacity Ratio for Signalized Intersections.

The results of the cumulative analysis show that the unsignalized intersections would operate with an average delay of less than 22 seconds and the signalized intersection of South La Cumbre Road at the Southbound Route 101 Ramps would operate with a v/c ratio of less than 0.77. Therefore, the project would have **No Significant Cumulative Impact** at the study area intersections.

The detailed level of service worksheets for the analyzed intersections are included in **Appendix B**.

## Cumulative Conditions With CUP Buildout Scenario

For comparison purposes, the future cumulative conditions were also analyzed with the CUP Buildout scenario previously presented in the Without Project section. As shown in **Table 14**, the cumulative impacts for the CUP Buildout scenario would be the same as for the Project.

## Table 14: LOS Analysis – Cumulative Project Conditions With CUP Buildout

| Intersection | Future With CUP Conditions | | | | Cumulative CUP Conditions | | | |
|---|---|---|---|---|---|---|---|---|
| | AM Peak Hour | | PM Peak Hour | | AM Peak Hour | | PM Peak Hour | |
| | LOS | V/C or Avg Delay | LOS | V/C or Avg Delay | LOS | V/C or Avg Delay | LOS | V/C or Avg Delay |
| Calle de los Amigos at Modoc Road[(a)] | B | 13.0 | C | 15.4 | B | 13.6 | C | 16.2 |
| Via Senda at Modoc Rd[(a)] | A | 9.8 | B | 12.3 | B | 10.0 | B | 12.8 |
| Via Senda at Las Palmas Dr[(a)] | B | 13.2 | B | 12.2 | B | 13.6 | B | 12.5 |
| S La Cumbre Rd at Route 101 SB Ramps | B | 0.616 | B | 0.681 | B | 0.617 | B | 0.693 |

Note: [a] intersection controlled by stop sign; values represent average delay in seconds.
LOS = Level of Service, Delay = Average Vehicle Delay (Seconds)
V/C = Volume-to-Capacity Ratio for Signalized Intersections.

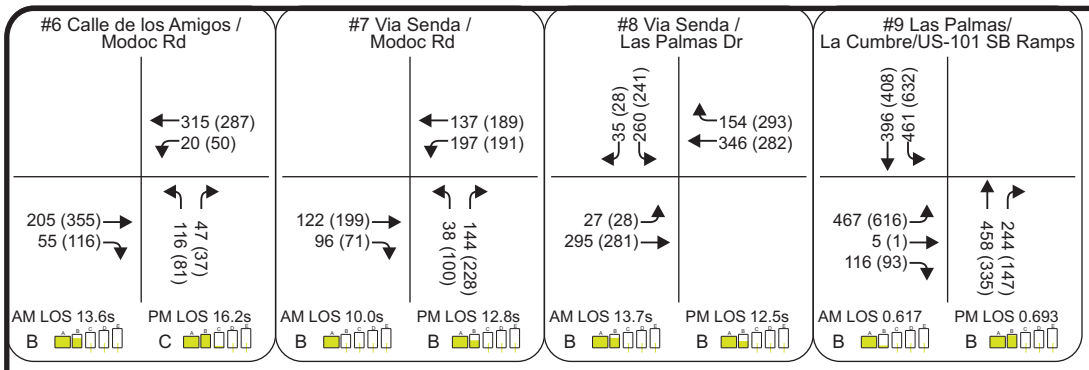

## Legend

1 - Study Intersection

XX(XX) - AM (PM) Peak Hour Volumes

AM LOS 0.429 — Peak Hr V/C or Del/Veh (seconds)
A — Level of Service (LOS)

- LOS A through D
- LOS E
- LOS F

NOT TO SCALE

ITERIS

**FIGURE 13**
**Total Cumulative With Project Peak-Hour Traffic Volumes**
**Valle Verde Home Project TIA**

# TRANSPORTATION ACCESSIBILITY ANALYSIS

There are basically four modes of transportation through which the site can be accessed by employees, residents, and visitors to the site. They are automobile, transit, bicycle and on foot.

There are currently two public roads that serve the Valle Verde site with several options for access to those roads. This section reviews the functionality and accessibility associated with all four transportation modes.

## Vehicular Access Analysis

### Project Access

Primary access to the project site is provided by two public streets, Calle de los Amigos and Torino Drive. Calle de los Amigos connects at its northern terminus with Modoc Road providing access to the La Cumbre Road interchange to the west and Las Positas Road to the east. Torino Drive extends west from the site and connects to Veronica Springs Road. From there vehicles can go north to Modoc Road or south to Las Positas Road and eventually Cliff Drive. West of Calle de los Amigos, Torino Drive serves the 11 residences in the Hidden Oaks Estates and the Valle Verde Campus only. The Valle Verde facility contains an extensive sidewalk and roadway network to facilitate on-site vehicular and pedestrian mobility throughout the site.

As part of the proposal, a new 20-foot wide driveway would be installed off Torino Drive to provide access to eight of the ten new units on the Rutherford parcel. The remaining two units would have access from an existing private driveway (Calle Sastre) currently serving the property, which is proposed to be upgraded. In addition, the residential units proposed on the north and west portions of the project site would be accessed from a new private driveway off of Senda Verde, an existing internal private roadway.

The intersection of Calle de los Amigos and Modoc Road would regularly be used by project-related traffic. The operational delay at this intersection has been identified as a concern by project area residents and based on the City's accident records the intersection has been the location of on average just over one accident per year over the past five years. The posted speed limit of Modoc Road is 45 miles per hour. Informal car following surveys conducted during field reviews of the area indicated that some traffic travels along Modoc Road faster than the 45 mile per hour limit.

Based on the results of the traffic analysis in the previous section the operational delay at the intersection is well within the City's acceptable standards. As noted, even though individual vehicles may experience longer delays, on average the intersection works at an acceptable LOS.

The sight distance to the west for northbound vehicles turning left can be restricted if vegetation along the south side of Modoc Road west of the intersection is allowed to become overgrown. The roadway also has a slight horizontal curve west of the intersection and bike lanes along both sides.

### Multi-Way Stop Sign

One method for addressing safety and access issues at intersections like Calle de los Amigos and Modoc Road is to provide multi-way, or all-way, stop control. Multi-way stop control can be useful as a safety measure at intersections if certain traffic conditions exist. Safety concerns associated with multi-way stops include pedestrians, bicyclists, and all road users expecting other road users to stop.

Multi-way stop control is used where the volume of traffic on the intersecting roads is approximately equal.

The decision to install multi-way stop control should be based on an engineering study that considers the following criteria:

A. Where a traffic signal is justified, the multi-way stop is an interim measure that can be installed quickly to control traffic while arrangements are being made for the installation of the traffic signal.

B. A crash problem, as indicated by 5 or more reported crashes in a 12-month period that are susceptible to correction by a multi-way stop installation. Such crashes include right- and left-turn collisions as well as right-angle collisions.

C. Minimum volumes:

1. The vehicular volume entering the intersection from the major street approaches (total of both approaches) averages at least 300 vehicles per hour for any 8 hours of an average day, and
2. The combined vehicular, pedestrian, and bicycle volume entering the intersection from the minor street approaches (total of both approaches) averages at least 200 units per hour for the same 8 hours, with an average delay to minor-street vehicular traffic of at least 30 seconds per vehicle during the highest hour, but
3. If the 85th-percentile approach speed of the major-street traffic exceeds 40 mph, the minimum vehicular volume warrants are 70 percent of the above values.

D. Where no single criterion is satisfied, but where Criteria B, C.1, and C.2 are all satisfied to 80 percent of the minimum values. Criterion C.3 is excluded from this condition.

Other criteria that may be considered in an engineering study include:

1. The need to control left-turn conflicts;
2. The need to control vehicle/pedestrian conflicts near locations that generate high pedestrian volumes;
3. Locations where a road user, after stopping, cannot see conflicting traffic and is not able to reasonably safely negotiate the intersection unless conflicting cross traffic is also required to stop; and
4. An intersection of two residential neighborhood collector (through) streets of similar design and operating characteristics where multi-way stop control would improve traffic operational characteristics of the intersection.

A review of the operational, traffic volume, and accident data shows that none of the criteria for installing a multi-way stop sign are met. Therefore, ***it is not recommended that a multi-way stop be installed at the intersection of Calle de los Amigos and Modoc Road***.

Site Access Driveway on Torino Drive

A new access driveway is proposed as part of the Project on Torino Drive just east of the access to the Hidden Oaks Estates neighborhood. Torino Drive terminates at the Hidden Oaks Estates subdivision and will not be extended in the future due to the topography and layout of the residences in Hidden Oaks. Since this segment of Torino Drive provides access to only eight of the proposed units the traffic volumes are currently small and will continue to be in the future.

A field review of the area was conducted and no sight line obstructions were identified. Line of sight from the new access road to the Rutherford Parcel will need to provide a minimum of 150 feet of stopping sight for a 25-mile per hour speed on Torino Drive. The driveway will connect to Torino Drive at an approximate 90-degree angle and will provide one inbound and one outbound lane with stop sign-control for traffic exiting the site onto Torino Drive. The driveway design will be consistent with the Transportation Division requirements with the final details of the design being reviewed during the plan check process.

View Along Torino Drive
Looking East From Hidden Oaks Estates

The Fire Department and Transportation Planning Staff reviewed the proposed road on the Rutherford Parcel and determined that the location of the road would not result in access, limited sight distance, circulation or safety impacts related to vehicular conflicts. The traffic volumes on Torino Drive, above Calle de los Amigos are low, as this segment of the road serves exclusively the 11 residences of Hidden Oaks Estates and Valle Verde.

## Parking

The Valle Verde Retirement facility currently provides 331 parking spaces throughout its campus for staff, residents and visitors. Approximately 193 spaces are assigned and reserved for residents, including 12 spaces provided in garages. An additional 138 undesignated spaces are provided for visitors and staff. The Zoning Ordinance parking requirement for the existing facility is 259 spaces, based on the current number of senior residential units and beds associated with the use.

On-street parking is allowed along both Calle de los Amigos and Torino Drive near the site and along most of the length of both roads. This on-street parking adjacent to the site serves as both an overflow parking area for residents, guests, and employees; provides parking for Hidden Valley Park, and also serves as a traffic calming measure to keep vehicles from traveling too fast along these local streets. The amount of on-street parking occurring at any point during the day varies by time and location with the most on-street parking occurring during the middle of the day along the Calle de los Amigos frontage.

In September 2006, Associated Transportation Engineers (ATE) conducted parking surveys at Valle Verde to determine peak hour demand for the campus. Peak parking demand was observed at 4:00 PM, during which time 67 percent of the assigned parking spaces were occupied, and 62 percent of the undesignated spaces were occupied. Overall, 65 percent (207 spaces) of the total parking supply on campus was occupied at this time. In addition, the parking surveys found that 60 project-related cars were parked along the adjacent streets throughout the day. During informal field observations conducted in December 2009 about the same number of vehicles were observed parked on-street along Calle de los Amigos. No vehicles were observed parking along Torino Drive adjacent to the site.

Future development of the 40 residential units and upgraded common areas will require compliance with the City's Zoning Ordinance requirements for parking of a senior facility, which is one space per senior unit and 0.5 spaces per bed. Therefore, the parking requirement for the proposed project would be 42 spaces (40 spaces for the senior residential units plus 2 spaces for the four proposed Assisted Living facility beds). The Zoning Ordinance parking requirement for the existing development and the proposed project is 301 spaces.

As proposed, the Project will add 37 assigned garage spaces and 46 additional surface lot spaces, which would increase the total number of parking spaces to 414. In addition to increasing the amount of off-street parking at the site, some of the additional parking spaces developed as part of the Project will provide employee parking located throughout the site in more convenient locations than currently exist. This will reduce the desire of some employees to park on-street because no convenient off-street parking is provided near where they work at Valle Verde.

However, the use of on-street parking along the site frontages reduces the perceived lane width by providing friction against freeflow travel along the street. Several comments presented during the EIR Scoping public hearing for the Project held in June 2009 indicated that drivers were slowed by vehicles moving into and out of the on-street parking spaces. Without the parking vehicle speeds would increase, which would increase the severity of possible collisions.

The parking demand analysis performed by ATE concluded that the parking demand for the proposed Project would be 40 spaces for additional residents. In addition, 75 on-site spaces should be provided for employees and visitors (10 project-related visitor spaces, 5 additional spaces for project-related employees, and 60 spaces for the existing employees currently parking on the street) for a total of 115 on-site spaces.

The proposed off-street parking will address the parking demand for the Project, as well as, reduce the number of employee cars parked on-street. Therefore, project-related impacts related to Valle Verde's parking supply and demand are ***less than significant.***

One issue that should be addressed as the Project is developed is to make sure that adequate space is left between the edges of the site driveways along Calle de los Amigos and Torino Drive and the fronts and rears of nearby parked cars. A minimum five-foot separation should be provided between the edge of the driveway and the first adjacent parked car. This gap will allow for better visibility for vehicles exiting the site driveways to see possible oncoming traffic. Therefore, it is ***recommended that the curbs adjacent to the Valle Verde driveways on Calle de los Amigos and Torino Drive should be painted red to prohibit parking within five feet of the driveways***.

## Transit Access Analysis

The Santa Barbara Metropolitan Transportation District (MTD) currently operates one transit route in the area of the Valle Verde site. MTD Route 5 travels along Calle de los Amigos with a transit stop located on both sides of the road adjacent to the site. Service is provided on weekdays, Saturdays and Sunday with headways of 60 minutes. The limited frequency of service and lack of alternative transit routes in the area reduce the viability of public transit as a primary method for Valle Verde residents, guests, and staff to access the site. It does though provide a transit alternative to using an automobile. Therefore, the improvements being proposed for Valle Verde may marginally increase the normal, everyday demand for transit services. Based on this analysis the Project's impact on transit access and operations will be ***less than significant***.

## Bicycle Access Analysis

The site is generally well served by bicycle facilities in the area and has good connectivity to other areas in the City. However, given the nature of the development and very limited number of additional employees that may result from the project (i.e., a part-time bank teller), it is not likely that there will be any substantial increase in bicycle usage in the area as a result of the Project. Therefore, the Project's impact on bicycle access and/or circulation will be ***less than significant***.

## Pedestrian Access Analysis

Pedestrian walkways, consistent with those contained throughout the campus, are proposed on the Rutherford parcel to provide internal access and circulation. Additional new, relocated or improved pedestrian pathways are proposed throughout the site as part of the development proposal and will meet Building Code for accessibility requirements.

Field observations of the area indicate that while there is some pedestrian activity, most of it is limited to recreational walking or access to the area transit stops. Based on the field observations, the existing and proposed system of sidewalks and paths should be more than adequate to accommodate pedestrian activity in the area. During the Project construction and after completion, the Project circulation would be maintained for disabled accessibility or equivalent facilitation in accordance with American Disabilities Act requirements. Therefore, the Project's impact on pedestrian access and circulation will be ***less than significant***.

## CONSTRUCTION TRAFFIC IMPACT ANALYSIS

For the construction activities scheduled to occur at Valle Verde, there are two specific activities that are expected to have the greatest potential to impact traffic operations in the areas surrounding the project site: site preparation/demolition and construction.

The overall project construction process is estimated to last approximately 18 months. This would include grading for site preparation over approximately 3 months, and construction duration of estimated 18 months. Grading processes would involve 15 workers, and during the peak construction period the project would require up to 30 workers on site on occasion. Working hours during the construction process are proposed to be 7:00 a.m. – 5:00 p.m. weekdays excluding holidays. Staging, equipment, materials storage, and temporary construction worker parking would occur on-site or on a designated off-site location.

The project would generate construction-related traffic that would occur over the 18-month construction period and would vary depending on the stage of construction. Because of the varying schedule and work shift sizes, the number of construction-related vehicles cannot specifically be identified, but given the project scale and the limited workforce size the amount of construction-related traffic would be limited.

In an effort to reduce the amount of traffic disruption and delay created by construction activities, a traffic control plan must be developed for the project and be approved by City staff. The following is a list of conditions that must be met for the City to approve a project's traffic control plan:

- All construction equipment, material and activities must remain on-site and any street closures that would still be needed would be limited to a few days per event.
- The haul routes for all construction-related trucks, three tons or more, entering or exiting the site, shall be approved by the City Transportation Engineer. Construction-related truck trips for all trucks three tons or more shall not be scheduled during peak hours (7:00 a.m. to 9:00 a.m. and 4:00 p.m. to 6:00 p.m.) to help reduce truck traffic and noise on adjacent streets and roadways. The route of construction-related traffic shall be established to minimize trips through surrounding residential neighborhoods.
- Construction parking and vehicle/equipment/materials storage shall be provided as follows:
  a. During construction, free parking spaces for construction workers shall be provided on-site or off-site in a location subject to the approval of the Transportation and Parking Manager.
  b. On-site or off-site storage shall be provided for construction materials, equipment, and vehicles. Storage of construction materials within the public right-of-way is prohibited.
- Deliveries of construction materials or supplies that would require a street closure must be approved by the Transportation Manager and shall not be stored in the public right of way for longer than a few days without the approval of the Transportation Manager.

With the limited number of peak construction-related trips expected to be generated by the Project and the short duration in which these trips are expected to occur, no significant construction-related traffic impacts would result. Therefore, the temporary construction traffic is considered to be an adverse but not significant impact.

# CONGESTION MANAGEMENT PROGRAM ANALYSIS

The Congestion Management Program (CMP) was created statewide as a result of Proposition 111 and has been implemented locally by the Santa Barbara County Association of Governments (SBCAG). The CMP for Santa Barbara County requires that the traffic impact of individual development projects of potential regional significance be analyzed. A specific system of arterial roadways plus all freeways comprise the CMP system. This section describes the analysis of project-related impacts on the CMP system. The impact assessment guidelines for CMP facilities are provided in Appendix D.

The CMP requires a detail analysis of proposed development projects if a project is estimated to generate more than 500 average daily trips or more than 50 peak hour trips. Projects generating less than these thresholds are considered to be consistent with the CMP. The trip generation estimates previously provided in Table 7 show that during the weekday AM and PM peak hours the project is expected to generate 8 and 12 vehicle trips, respectively, and 94 additional daily trip ends. None of these values surpass the CMP thresholds of 50 peak hour trips or 500 daily trips. Based on this information, no further CMP analysis is required.

# EMERGENCY EVACUATION ANALYSIS

A qualitative analysis was conducted to evaluate how the Valle Verde project could affect overall traffic operations in the project area under emergency evacuation conditions. The expected operating conditions for the site and the surrounding area are described below.

The proposed project would increase the overall number of people at the Valle Verde site as there would be perhaps 80 additional on-site residents if each of the proposed residential units had two occupants, and there could also be a very limited number of additional employees during parts of the day. However, the net additional 34 units at the site represents approximately only a 3.9 percent increase in the total number of residential units in the area and the number of people that may be forced to leave the area surrounding the project site during an emergency.

State law requires elderly care facilities to conduct regular fire drills and Valle Verde has an emergency evacuation plan which includes drills that are performed at least twice a year to practice implementation of the plan. All residents are included in the evacuation plan, as will the proposed Project units. Additionally, Valle Verde has several small buses on site which would be used to evacuate residents.

The current evacuation plan for Valle Verde is as follows:

- Under an evacuation "warning", Residential Living residents evacuate to local family and friends via private car, and area families are encouraged to take custody of Assisted Living and Skilled Nursing residents.
- The rest of the campus shelters in place until instructed to evacuate by emergency authorities at the City's Emergency Operations Center (EOC). At such time, Residential Living residents evacuate to the nearest identified Red Cross evacuation site via private auto. They are encouraged if possible to carpool with other Valle Verde residents (the Valle Verde staff assists in carpool arrangements).
- Assisted Living residents are transported in Valle Verde buses along with their care staff to safest facility with a mutual aid agreement.
- Skilled Nursing residents are transported next via Valle Verde vehicles and E-Z Lift vehicles with their care staff to a site identified by the Valle Verde administration and EOC.
- Valle Verde facility staff evacuate with residents, but a team of administrators and maintenance staff remain until the campus is certified as evacuated and locked down.

If an emergency evacuation were deemed necessary, Calle de los Amigos and Torino Drive would be the primary exit to which Valle Verde residents and visitors would be directed. From those two roads, people can either go north to Modoc Road or south to Cliff Drive. The direction of any evacuation would be based on the location of the hazard, but in nearly all instances there will be more than one egress route available to residents, staff, and guests. Because Valle Verde staff and residents are directed out of the site in shifts and some would be transported by bus or other multi-occupant vehicles, the surrounding street system would experience less impact than if all of the site population would be driving individual vehicles.

Las Positas Road is a state highway with very few intersections or driveways that would impede the evacuation of the project and other area traffic. Modoc Road also has few intersections and driveways in the study area and is single loaded along much of its length between Las Positas and Via Senda. If an evacuation condition were to occur, area roadways may experience limited periods of congestion as these roadways are not designed to move the population of entire neighborhoods at

a single time. However, over a longer period the area roadways are adequate to serve the evacuation needs of the Hidden Valley neighborhood. Based on the relatively low number of cars that could be generated by the Project it is expected that the area roadways can accommodate the limited additional project-related traffic.

Due to the small increase in the number of residential units in the Hidden Valley neighborhood that would occur as a result of the Project and the low potential for evacuation conditions to occur, this impact is considered to be ***less than significant***.

# APPENDIX A

## TRAFFIC COUNT DATA SHEETS

City Traffic Counters, LLC.
174 W. Foothhill Blvd #263
Monrovia, CA 91016
626-256-4171

File Name : CalleModoc
Site Code : 00000000
Start Date : 1/13/2010
Page No : 1

Groups Printed- Group 1

| | Calle De Los Amigos Southbound | | | Modoc Rd Westbound | | | Calle De Los Amigos Northbound | | | Modoc Rd Eastbound | | | |
|---|---|---|---|---|---|---|---|---|---|---|---|---|---|
| Start Time | Left | Thru | Right | Left | Thru | Right | Left | Thru | Right | Left | Thru | Right | Int. Total |
| Factor | 1.0 | 1.0 | 1.0 | 1.0 | 1.0 | 1.0 | 1.0 | 1.0 | 1.0 | 1.0 | 1.0 | 1.0 | |
| 07:00 AM | 0 | 0 | 0 | 5 | 24 | 0 | 17 | 0 | 9 | 0 | 18 | 7 | 80 |
| 07:15 AM | 0 | 0 | 0 | 5 | 39 | 0 | 13 | 0 | 9 | 0 | 28 | 5 | 99 |
| 07:30 AM | 0 | 0 | 0 | 5 | 97 | 0 | 24 | 0 | 11 | 0 | 34 | 11 | 182 |
| 07:45 AM | 0 | 0 | 0 | 5 | 98 | 0 | 31 | 0 | 14 | 0 | 68 | 11 | 227 |
| Total | 0 | 0 | 0 | 20 | 258 | 0 | 85 | 0 | 43 | 0 | 148 | 34 | 588 |
| 08:00 AM | 0 | 0 | 0 | 6 | 67 | 0 | 24 | 0 | 12 | 0 | 54 | 11 | 174 |
| 08:15 AM | 0 | 0 | 0 | 3 | 44 | 0 | 17 | 0 | 8 | 0 | 38 | 19 | 129 |
| 08:30 AM | 0 | 0 | 0 | 8 | 34 | 0 | 22 | 0 | 11 | 0 | 32 | 11 | 118 |
| 08:45 AM | 0 | 0 | 0 | 4 | 47 | 0 | 25 | 0 | 17 | 0 | 44 | 9 | 146 |
| Total | 0 | 0 | 0 | 21 | 192 | 0 | 88 | 0 | 48 | 0 | 168 | 50 | 567 |
| 04:00 PM | 0 | 0 | 0 | 11 | 59 | 0 | 18 | 0 | 9 | 0 | 57 | 16 | 170 |
| 04:15 PM | 0 | 0 | 0 | 18 | 86 | 0 | 23 | 0 | 6 | 0 | 55 | 11 | 199 |
| 04:30 PM | 0 | 0 | 0 | 11 | 92 | 0 | 9 | 0 | 8 | 0 | 79 | 22 | 221 |
| 04:45 PM | 0 | 0 | 0 | 13 | 57 | 0 | 25 | 0 | 12 | 0 | 60 | 25 | 192 |
| Total | 0 | 0 | 0 | 53 | 294 | 0 | 75 | 0 | 35 | 0 | 251 | 74 | 782 |
| 05:00 PM | 0 | 0 | 0 | 9 | 68 | 0 | 18 | 0 | 9 | 0 | 105 | 32 | 241 |
| 05:15 PM | 0 | 0 | 0 | 15 | 58 | 0 | 18 | 0 | 6 | 0 | 84 | 30 | 211 |
| 05:30 PM | 0 | 0 | 0 | 9 | 81 | 0 | 17 | 0 | 10 | 0 | 75 | 21 | 213 |
| 05:45 PM | 0 | 0 | 0 | 7 | 53 | 0 | 12 | 0 | 6 | 0 | 66 | 17 | 161 |
| Total | 0 | 0 | 0 | 40 | 260 | 0 | 65 | 0 | 31 | 0 | 330 | 100 | 826 |
| Grand Total | 0 | 0 | 0 | 134 | 1004 | 0 | 313 | 0 | 157 | 0 | 897 | 258 | 2763 |
| Apprch % | 0.0 | 0.0 | 0.0 | 11.8 | 88.2 | 0.0 | 66.6 | 0.0 | 33.4 | 0.0 | 77.7 | 22.3 | |
| Total % | 0.0 | 0.0 | 0.0 | 4.8 | 36.3 | 0.0 | 11.3 | 0.0 | 5.7 | 0.0 | 32.5 | 9.3 | |

City Traffic Counters, LLC.
174 W. Foothhill Blvd #263
Monrovia, CA 91016
626-256-4171

File Name : CalleModoc
Site Code : 00000000
Start Date : 1/13/2010
Page No : 2

| | Calle De Los Amigos Southbound | | | | Modoc Rd Westbound | | | | Calle De Los Amigos Northbound | | | | Modoc Rd Eastbound | | | | |
|---|---|---|---|---|---|---|---|---|---|---|---|---|---|---|---|---|---|
| Start Time | Left | Thru | Right | App. Total | Left | Thru | Right | App. Total | Left | Thru | Right | App. Total | Left | Thru | Right | App. Total | Int. Total |
| Peak Hour From 07:00 AM to 11:45 AM - Peak 1 of 1 | | | | | | | | | | | | | | | | | |
| Intersection | 07:30 AM | | | | | | | | | | | | | | | | |
| Volume | 0 | 0 | 0 | 0 | 19 | 306 | 0 | 325 | 96 | 0 | 45 | 141 | 0 | 194 | 52 | 246 | 712 |
| Percent | 0.0 | 0.0 | 0.0 | | 5.8 | 94.2 | 0.0 | | 68.1 | 0.0 | 31.9 | | 0.0 | 78.9 | 21.1 | | |
| 07:45 Volume | 0 | 0 | 0 | 0 | 5 | 98 | 0 | 103 | 31 | 0 | 14 | 45 | 0 | 68 | 11 | 79 | 227 |
| Peak Factor | | | | | | | | | | | | | | | | | 0.784 |
| High Int. | 6:45:00 AM | | | | 07:45 AM | | | | 07:45 AM | | | | 07:45 AM | | | | |
| Volume | 0 | 0 | 0 | 0 | 5 | 98 | 0 | 103 | 31 | 0 | 14 | 45 | 0 | 68 | 11 | 79 | |
| Peak Factor | | | | | | | | 0.789 | | | | 0.783 | | | | 0.778 | |

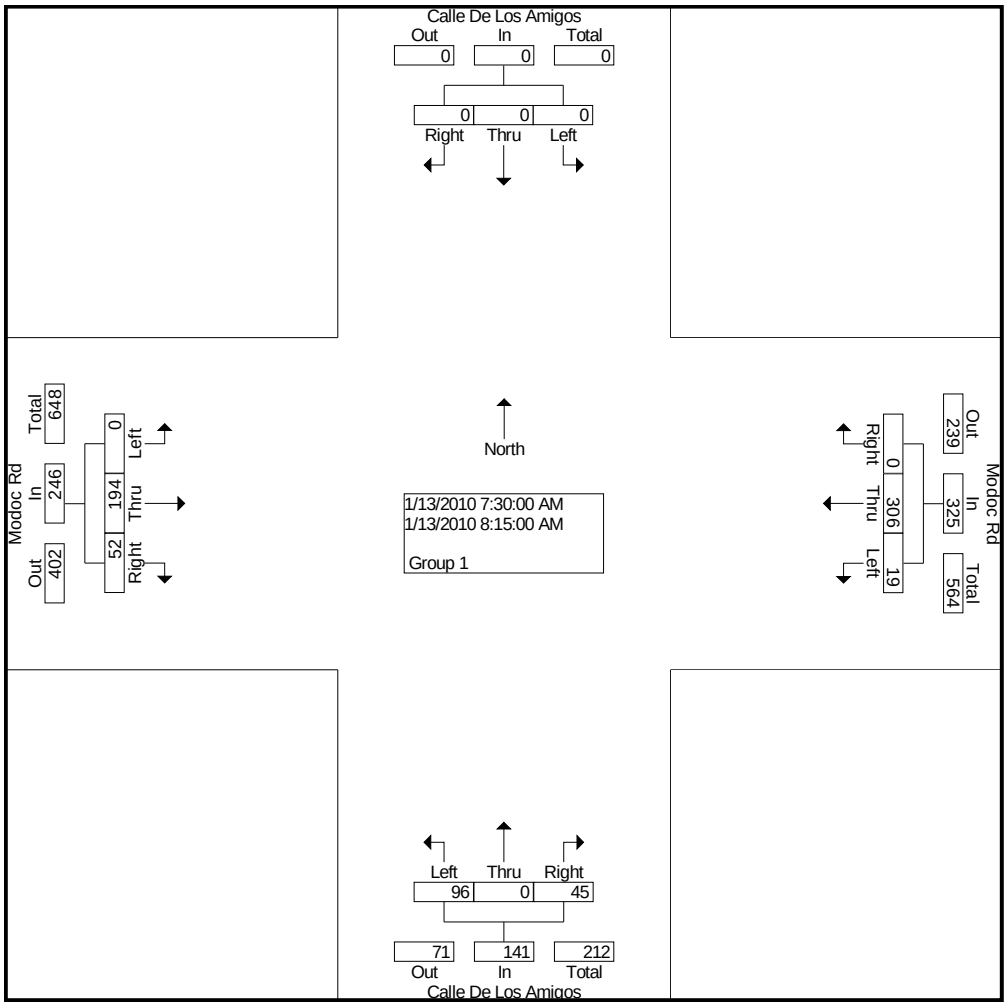

City Traffic Counters, LLC.
174 W. Foothhill Blvd #263
Monrovia, CA 91016
626-256-4171

File Name : CalleModoc
Site Code : 00000000
Start Date : 1/13/2010
Page No : 3

| | Calle De Los Amigos Southbound | | | | Modoc Rd Westbound | | | | Calle De Los Amigos Northbound | | | | Modoc Rd Eastbound | | | | |
|---|---|---|---|---|---|---|---|---|---|---|---|---|---|---|---|---|---|
| Start Time | Left | Thru | Right | App. Total | Left | Thru | Right | App. Total | Left | Thru | Right | App. Total | Left | Thru | Right | App. Total | Int. Total |
| Peak Hour From 12:00 PM to 05:45 PM - Peak 1 of 1 | | | | | | | | | | | | | | | | | |
| Intersection | 04:30 PM | | | | | | | | | | | | | | | | |
| Volume | 0 | 0 | 0 | 0 | 48 | 275 | 0 | 323 | 70 | 0 | 35 | 105 | 0 | 328 | 109 | 437 | 865 |
| Percent | 0.0 | 0.0 | 0.0 | | 14.9 | 85.1 | 0.0 | | 66.7 | 0.0 | 33.3 | | 0.0 | 75.1 | 24.9 | | |
| 05:00 Volume | 0 | 0 | 0 | 0 | 9 | 68 | 0 | 77 | 18 | 0 | 9 | 27 | 0 | 105 | 32 | 137 | 241 |
| Peak Factor | | | | | | | | | | | | | | | | | 0.897 |
| High Int. | | | | | 04:30 PM | | | | 04:45 PM | | | | 05:00 PM | | | | |
| Volume | 0 | 0 | 0 | 0 | 11 | 92 | 0 | 103 | 25 | 0 | 12 | 37 | 0 | 105 | 32 | 137 | |
| Peak Factor | | | | | | | | 0.784 | | | | 0.709 | | | | 0.797 | |

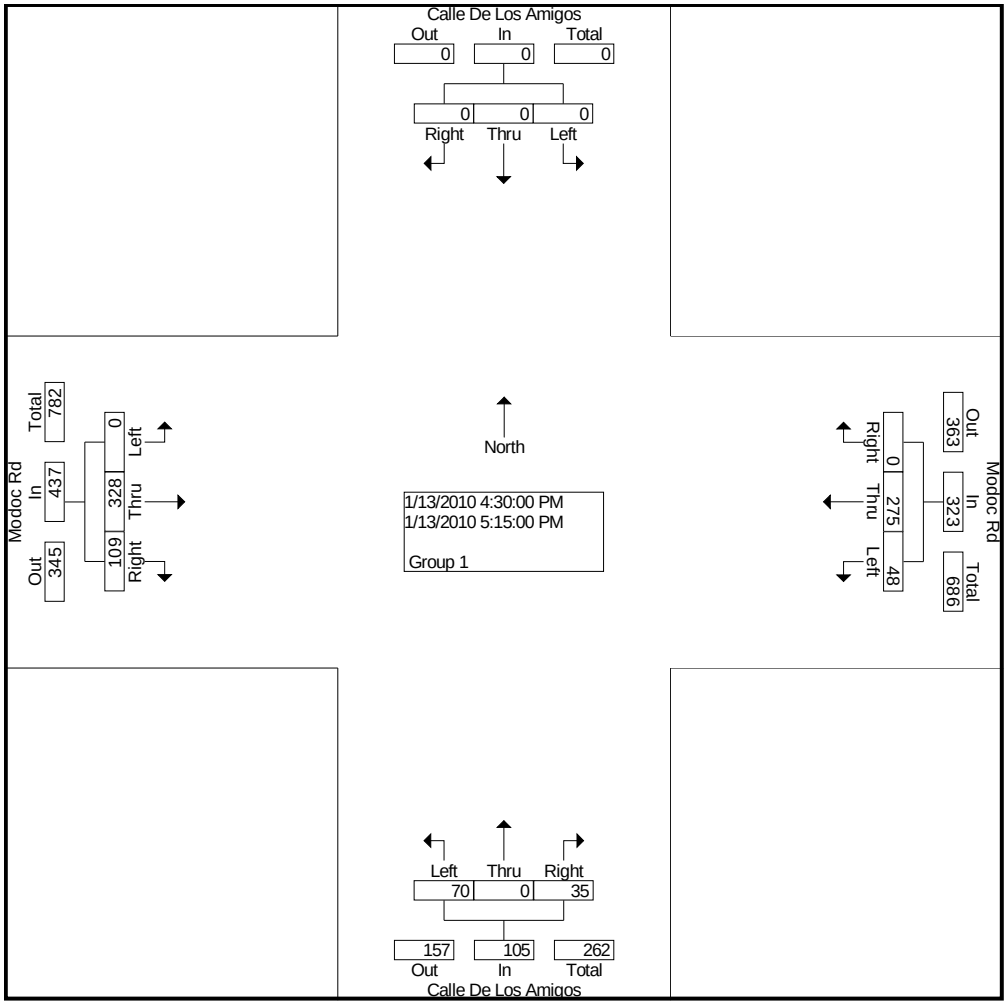

City Traffic Counters, LLC.
174 W. Foothhill Blvd #263
Monrovia, CA 91016
626-256-4171

File Name : ViaModoc
Site Code : 00000000
Start Date : 1/13/2010
Page No : 1

Groups Printed- Group 1

| | Via Senda Southbound | | | Modoc Rd Westbound | | | Via Senda Northbound | | | Modoc Rd Eastbound | | | |
|---|---|---|---|---|---|---|---|---|---|---|---|---|---|
| Start Time | Left | Thru | Right | Left | Thru | Right | Left | Thru | Right | Left | Thru | Right | Int. Total |
| Factor | 1.0 | 1.0 | 1.0 | 1.0 | 1.0 | 1.0 | 1.0 | 1.0 | 1.0 | 1.0 | 1.0 | 1.0 | |
| 07:00 AM | 0 | 0 | 0 | 19 | 11 | 0 | 7 | 0 | 9 | 0 | 9 | 10 | 65 |
| 07:15 AM | 0 | 0 | 0 | 27 | 35 | 0 | 4 | 0 | 18 | 0 | 14 | 11 | 109 |
| 07:30 AM | 0 | 0 | 0 | 55 | 25 | 0 | 4 | 0 | 26 | 0 | 23 | 11 | 144 |
| 07:45 AM | 0 | 0 | 0 | 51 | 53 | 0 | 6 | 0 | 42 | 0 | 41 | 31 | 224 |
| Total | 0 | 0 | 0 | 152 | 124 | 0 | 21 | 0 | 95 | 0 | 87 | 63 | 542 |
| 08:00 AM | 0 | 0 | 0 | 63 | 27 | 0 | 10 | 0 | 36 | 0 | 33 | 19 | 188 |
| 08:15 AM | 0 | 0 | 0 | 32 | 23 | 0 | 11 | 0 | 25 | 0 | 19 | 20 | 130 |
| 08:30 AM | 0 | 0 | 0 | 29 | 28 | 0 | 10 | 0 | 33 | 0 | 23 | 24 | 147 |
| 08:45 AM | 0 | 0 | 0 | 46 | 24 | 0 | 5 | 0 | 35 | 0 | 20 | 15 | 145 |
| Total | 0 | 0 | 0 | 170 | 102 | 0 | 36 | 0 | 129 | 0 | 95 | 78 | 610 |
| 04:00 PM | 0 | 0 | 0 | 45 | 34 | 0 | 28 | 0 | 40 | 0 | 39 | 15 | 201 |
| 04:15 PM | 0 | 0 | 0 | 40 | 40 | 0 | 18 | 0 | 50 | 0 | 46 | 24 | 218 |
| 04:30 PM | 0 | 0 | 0 | 47 | 58 | 0 | 22 | 0 | 49 | 0 | 49 | 15 | 240 |
| 04:45 PM | 0 | 0 | 0 | 55 | 36 | 0 | 26 | 0 | 48 | 0 | 35 | 20 | 220 |
| Total | 0 | 0 | 0 | 187 | 168 | 0 | 94 | 0 | 187 | 0 | 169 | 74 | 879 |
| 05:00 PM | 0 | 0 | 0 | 27 | 33 | 0 | 25 | 0 | 63 | 0 | 51 | 10 | 209 |
| 05:15 PM | 0 | 0 | 0 | 48 | 52 | 0 | 25 | 0 | 46 | 0 | 53 | 25 | 249 |
| 05:30 PM | 0 | 0 | 0 | 41 | 44 | 0 | 23 | 0 | 42 | 0 | 47 | 22 | 219 |
| 05:45 PM | 0 | 0 | 0 | 34 | 36 | 0 | 16 | 0 | 46 | 0 | 36 | 19 | 187 |
| Total | 0 | 0 | 0 | 150 | 165 | 0 | 89 | 0 | 197 | 0 | 187 | 76 | 864 |
| Grand Total | 0 | 0 | 0 | 659 | 559 | 0 | 240 | 0 | 608 | 0 | 538 | 291 | 2895 |
| Apprch % | 0.0 | 0.0 | 0.0 | 54.1 | 45.9 | 0.0 | 28.3 | 0.0 | 71.7 | 0.0 | 64.9 | 35.1 | |
| Total % | 0.0 | 0.0 | 0.0 | 22.8 | 19.3 | 0.0 | 8.3 | 0.0 | 21.0 | 0.0 | 18.6 | 10.1 | |

City Traffic Counters, LLC.
174 W. Foothhill Blvd #263
Monrovia, CA 91016
626-256-4171

File Name : ViaModoc
Site Code : 00000000
Start Date : 1/13/2010
Page No : 2

| | Via Senda Southbound | | | | Modoc Rd Westbound | | | | Via Senda Northbound | | | | Modoc Rd Eastbound | | | | |
|---|---|---|---|---|---|---|---|---|---|---|---|---|---|---|---|---|---|
| Start Time | Left | Thru | Right | App. Total | Left | Thru | Right | App. Total | Left | Thru | Right | App. Total | Left | Thru | Right | App. Total | Int. Total |
| Peak Hour From 07:00 AM to 11:45 AM - Peak 1 of 1 | | | | | | | | | | | | | | | | | |
| Intersection | 07:45 AM | | | | | | | | | | | | | | | | |
| Volume | 0 | 0 | 0 | 0 | 175 | 131 | 0 | 306 | 37 | 0 | 136 | 173 | 0 | 116 | 94 | 210 | 689 |
| Percent | 0.0 | 0.0 | 0.0 | | 57.2 | 42.8 | 0.0 | | 21.4 | 0.0 | 78.6 | | 0.0 | 55.2 | 44.8 | | |
| 07:45 Volume | 0 | 0 | 0 | 0 | 51 | 53 | 0 | 104 | 6 | 0 | 42 | 48 | 0 | 41 | 31 | 72 | 224 |
| Peak Factor | | | | | | | | | | | | | | | | | 0.769 |
| High Int. | 6:45:00 AM | | | | 07:45 AM | | | | 07:45 AM | | | | 07:45 AM | | | | |
| Volume | 0 | 0 | 0 | 0 | 51 | 53 | 0 | 104 | 6 | 0 | 42 | 48 | 0 | 41 | 31 | 72 | |
| Peak Factor | | | | | | | | 0.736 | | | | 0.901 | | | | 0.729 | |

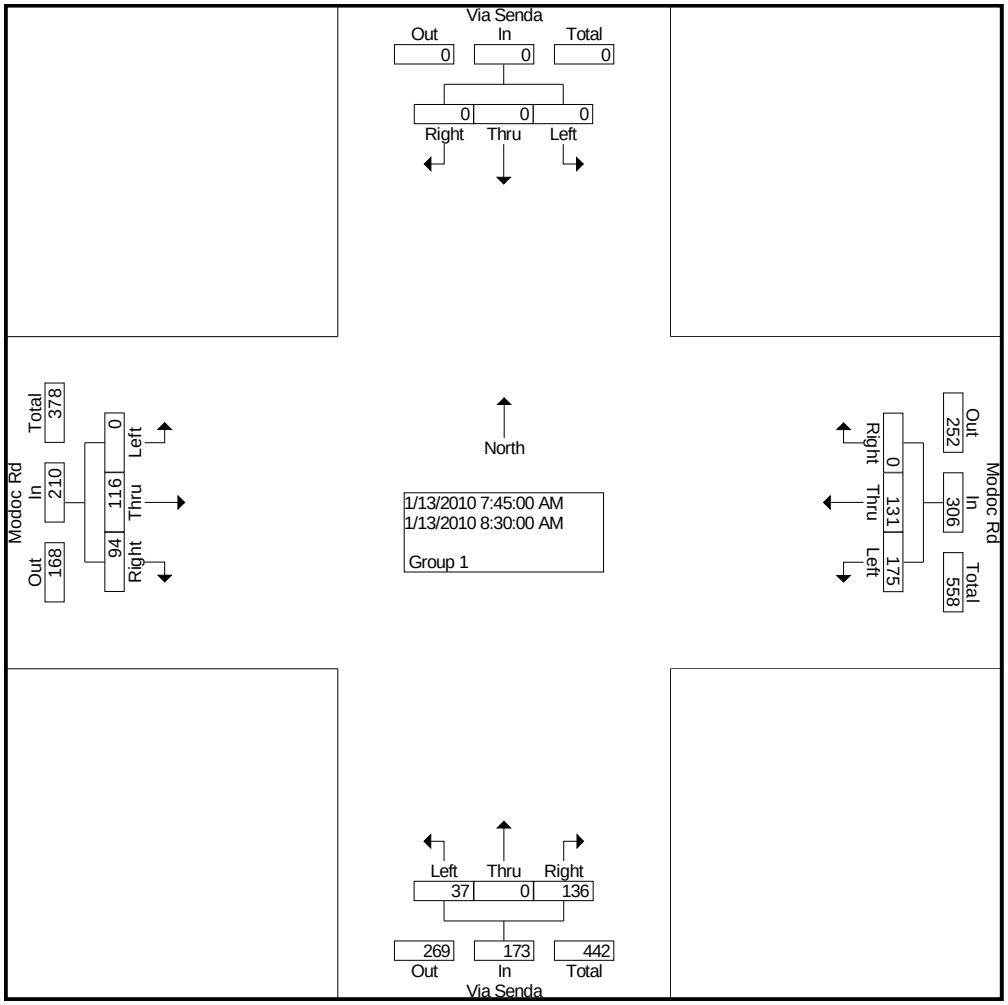

City Traffic Counters, LLC.
174 W. Foothhill Blvd #263
Monrovia, CA 91016
626-256-4171

File Name : ViaModoc
Site Code : 00000000
Start Date : 1/13/2010


| | Via Senda Southbound | | | | Modoc Rd Westbound | | | | Via Senda Northbound | | | | Modoc Rd Eastbound | | | | |
|---|---|---|---|---|---|---|---|---|---|---|---|---|---|---|---|---|---|
| Start Time | Left | Thru | Right | App. Total | Left | Thru | Right | App. Total | Left | Thru | Right | App. Total | Left | Thru | Right | App. Total | Int. Total |
| Peak Hour From 12:00 PM to 05:45 PM - Peak 1 of 1 | | | | | | | | | | | | | | | | | |
| Intersection | 04:30 PM | | | | | | | | | | | | | | | | |
| Volume | 0 | 0 | 0 | 0 | 177 | 179 | 0 | 356 | 98 | 0 | 206 | 304 | 0 | 188 | 70 | 258 | 918 |
| Percent | 0.0 | 0.0 | 0.0 | | 49.7 | 50.3 | 0.0 | | 32.2 | 0.0 | 67.8 | | 0.0 | 72.9 | 27.1 | | |
| 05:15 Volume | 0 | 0 | 0 | 0 | 48 | 52 | 0 | 100 | 25 | 0 | 46 | 71 | 0 | 53 | 25 | 78 | 249 |
| Peak Factor | | | | | | | | | | | | | | | | | 0.922 |
| High Int. | | | | | 04:30 PM | | | | 05:00 PM | | | | 05:15 PM | | | | |
| Volume | 0 | 0 | 0 | 0 | 47 | 58 | 0 | 105 | 25 | 0 | 63 | 88 | 0 | 53 | 25 | 78 | |
| Peak Factor | | | | | | | | 0.848 | | | | 0.864 | | | | 0.827 | |

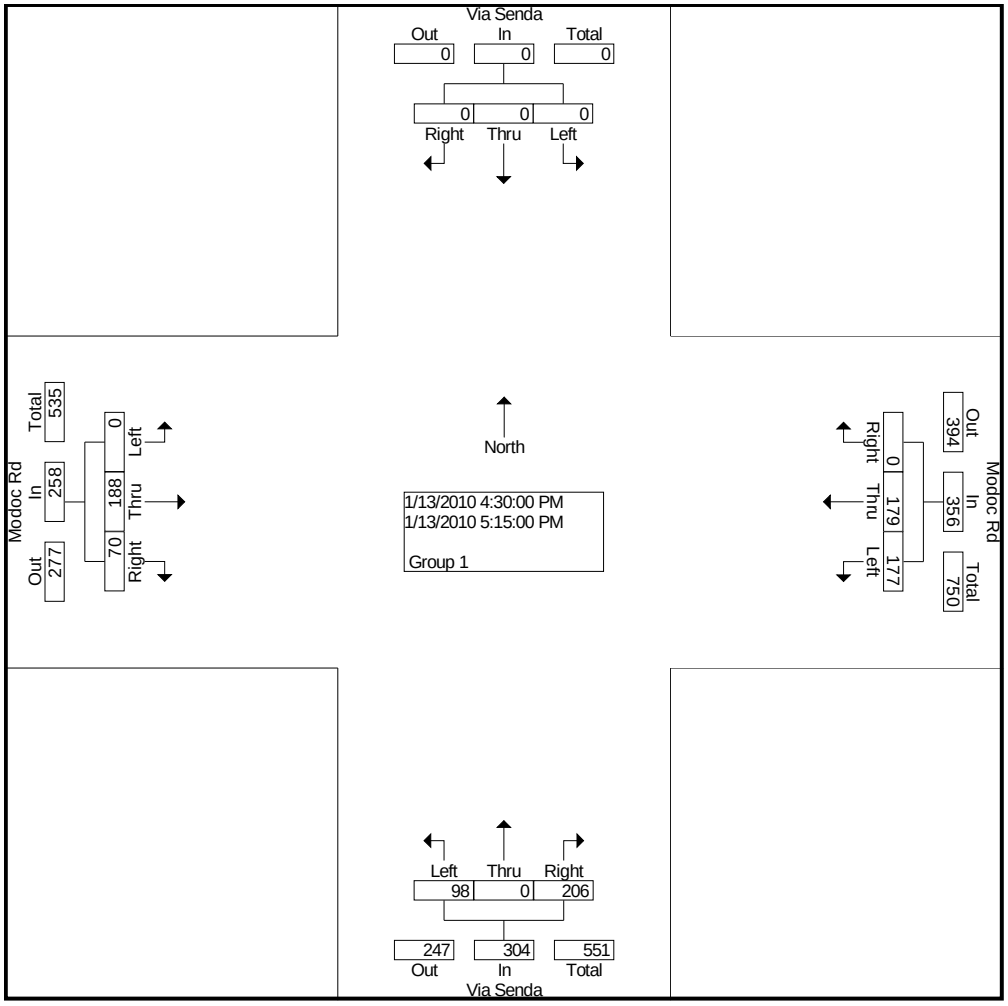

City Traffic Counters, LLC.
174 W. Foothhill Blvd #263
Monrovia, CA 91016
626-256-4171

File Name : ViaPalmas
Site Code : 00000000
Start Date : 1/13/2010
Page No : 1

Groups Printed- 1 - Unshifted

| | Via Senda Southbound | | | Las Palmas Dr Westbound | | | Via Senda Northbound | | | Las Palmas Dr Eastbound | | | |
|---|---|---|---|---|---|---|---|---|---|---|---|---|---|
| Start Time | Left | Thru | Right | Left | Thru | Right | Left | Thru | Right | Left | Thru | Right | Int. Total |
| Factor | 1.0 | 1.0 | 1.0 | 1.0 | 1.0 | 1.0 | 1.0 | 1.0 | 1.0 | 1.0 | 1.0 | 1.0 | |
| 07:00 AM | 26 | 0 | 3 | 0 | 31 | 16 | 0 | 0 | 0 | 1 | 13 | 0 | 90 |
| 07:15 AM | 29 | 0 | 9 | 0 | 46 | 20 | 0 | 0 | 0 | 1 | 43 | 0 | 148 |
| 07:30 AM | 51 | 0 | 15 | 0 | 56 | 31 | 0 | 0 | 0 | 0 | 53 | 0 | 206 |
| 07:45 AM | 66 | 0 | 16 | 0 | 128 | 32 | 0 | 0 | 0 | 15 | 92 | 0 | 349 |
| Total | 172 | 0 | 43 | 0 | 261 | 99 | 0 | 0 | 0 | 17 | 201 | 0 | 793 |
| 08:00 AM | 74 | 0 | 9 | 0 | 82 | 43 | 0 | 0 | 0 | 4 | 82 | 0 | 294 |
| 08:15 AM | 49 | 0 | 5 | 0 | 66 | 29 | 0 | 0 | 0 | 6 | 66 | 0 | 221 |
| 08:30 AM | 48 | 0 | 4 | 0 | 61 | 42 | 0 | 0 | 0 | 1 | 43 | 0 | 199 |
| 08:45 AM | 52 | 0 | 10 | 0 | 52 | 33 | 0 | 0 | 0 | 7 | 59 | 0 | 213 |
| Total | 223 | 0 | 28 | 0 | 261 | 147 | 0 | 0 | 0 | 18 | 250 | 0 | 927 |
| 04:00 PM | 50 | 0 | 11 | 0 | 56 | 58 | 0 | 0 | 0 | 11 | 83 | 0 | 269 |
| 04:15 PM | 58 | 0 | 8 | 0 | 57 | 59 | 0 | 0 | 0 | 9 | 53 | 0 | 244 |
| 04:30 PM | 52 | 0 | 10 | 0 | 58 | 64 | 0 | 0 | 0 | 7 | 63 | 0 | 254 |
| 04:45 PM | 69 | 0 | 6 | 0 | 65 | 67 | 0 | 0 | 0 | 7 | 63 | 0 | 277 |
| Total | 229 | 0 | 35 | 0 | 236 | 248 | 0 | 0 | 0 | 34 | 262 | 0 | 1044 |
| 05:00 PM | 35 | 0 | 4 | 0 | 67 | 81 | 0 | 0 | 0 | 6 | 66 | 0 | 259 |
| 05:15 PM | 66 | 0 | 9 | 0 | 65 | 65 | 0 | 0 | 0 | 6 | 80 | 0 | 291 |
| 05:30 PM | 56 | 0 | 8 | 0 | 74 | 57 | 0 | 0 | 0 | 8 | 65 | 0 | 268 |
| 05:45 PM | 48 | 0 | 5 | 0 | 54 | 61 | 0 | 0 | 0 | 2 | 47 | 0 | 217 |
| Total | 205 | 0 | 26 | 0 | 260 | 264 | 0 | 0 | 0 | 22 | 258 | 0 | 1035 |
| Grand Total | 829 | 0 | 132 | 0 | 1018 | 758 | 0 | 0 | 0 | 91 | 971 | 0 | 3799 |
| Apprch % | 86.3 | 0.0 | 13.7 | 0.0 | 57.3 | 42.7 | 0.0 | 0.0 | 0.0 | 8.6 | 91.4 | 0.0 | |
| Total % | 21.8 | 0.0 | 3.5 | 0.0 | 26.8 | 20.0 | 0.0 | 0.0 | 0.0 | 2.4 | 25.6 | 0.0 | |

City Traffic Counters, LLC.
174 W. Foothhill Blvd #263
Monrovia, CA 91016
626-256-4171

File Name : ViaPalmas
Site Code : 00000000
Start Date : 1/13/2010
Page No : 2

| | Via Senda Southbound | | | | Las Palmas Dr Westbound | | | | Via Senda Northbound | | | | Las Palmas Dr Eastbound | | | | |
|---|---|---|---|---|---|---|---|---|---|---|---|---|---|---|---|---|---|
| Start Time | Left | Thru | Right | App. Total | Left | Thru | Right | App. Total | Left | Thru | Right | App. Total | Left | Thru | Right | App. Total | Int. Total |
| Peak Hour From 07:00 AM to 11:45 AM - Peak 1 of 1 | | | | | | | | | | | | | | | | | |
| Intersection | 07:30 AM | | | | | | | | | | | | | | | | |
| Volume | 240 | 0 | 45 | 285 | 0 | 332 | 135 | 467 | 0 | 0 | 0 | 0 | 25 | 293 | 0 | 318 | 1070 |
| Percent | 84.2 | 0.0 | 15.8 | | 0.0 | 71.1 | 28.9 | | 0.0 | 0.0 | 0.0 | | 7.9 | 92.1 | 0.0 | | |
| 07:45 Volume | 66 | 0 | 16 | 82 | 0 | 128 | 32 | 160 | 0 | 0 | 0 | 0 | 15 | 92 | 0 | 107 | 349 |
| Peak Factor | | | | | | | | | | | | | | | | | 0.766 |
| High Int. | 08:00 AM | | | | 07:45 AM | | | | 6:45:00 AM | | | | 07:45 AM | | | | |
| Volume | 74 | 0 | 9 | 83 | 0 | 128 | 32 | 160 | 0 | 0 | 0 | 0 | 15 | 92 | 0 | 107 | |
| Peak Factor | | | | 0.858 | | | | 0.730 | | | | | | | | 0.743 | |

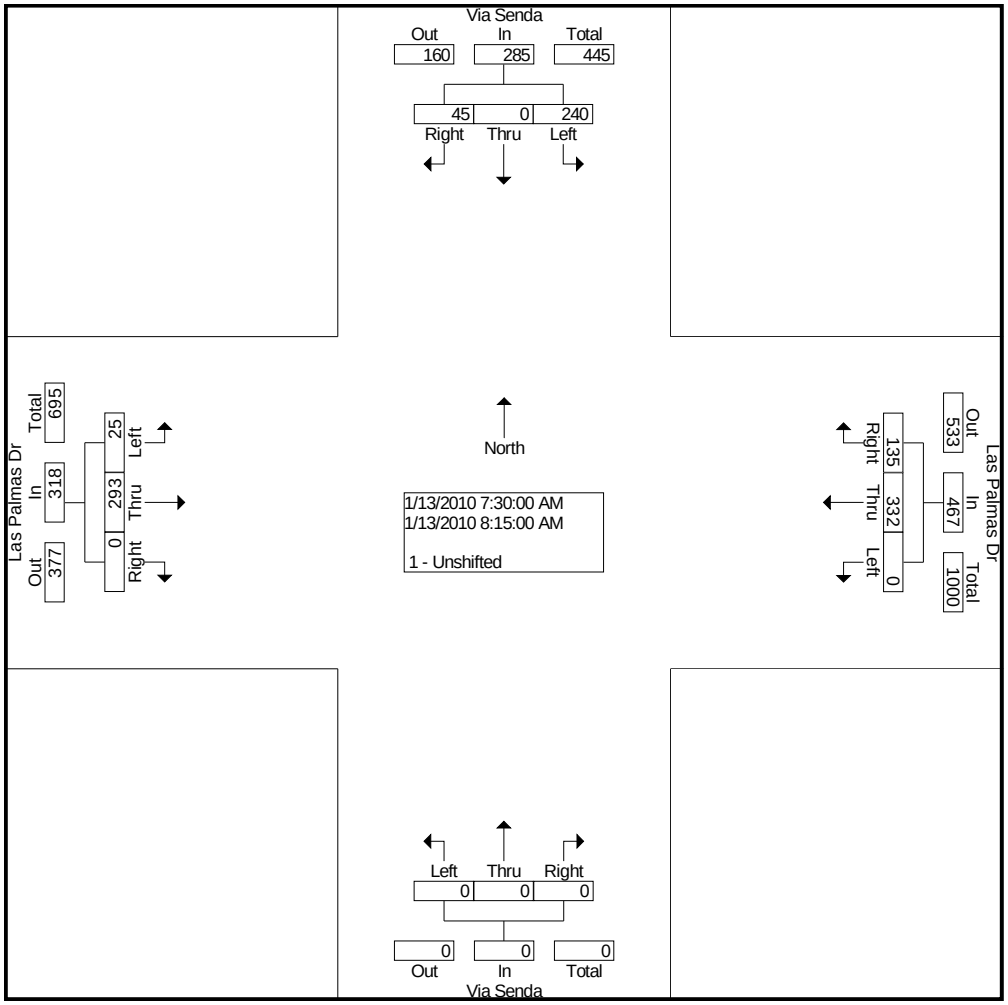

City Traffic Counters, LLC.
174 W. Foothhill Blvd #263
Monrovia, CA 91016
626-256-4171

File Name : ViaPalmas
Site Code : 00000000
Start Date : 1/13/2010
Page No : 3

| | Via Senda Southbound | | | | Las Palmas Dr Westbound | | | | Via Senda Northbound | | | | Las Palmas Dr Eastbound | | | | |
|---|---|---|---|---|---|---|---|---|---|---|---|---|---|---|---|---|---|
| Start Time | Left | Thru | Right | App. Total | Left | Thru | Right | App. Total | Left | Thru | Right | App. Total | Left | Thru | Right | App. Total | Int. Total |
| Peak Hour From 12:00 PM to 05:45 PM - Peak 1 of 1 | | | | | | | | | | | | | | | | | |
| Intersection | 04:45 PM | | | | | | | | | | | | | | | | |
| Volume | 226 | 0 | 27 | 253 | 0 | 271 | 270 | 541 | 0 | 0 | 0 | 0 | 27 | 274 | 0 | 301 | 1095 |
| Percent | 89.3 | 0.0 | 10.7 | | 0.0 | 50.1 | 49.9 | | 0.0 | 0.0 | 0.0 | | 9.0 | 91.0 | 0.0 | | |
| 05:15 Volume | 66 | 0 | 9 | 75 | 0 | 65 | 65 | 130 | 0 | 0 | 0 | 0 | 6 | 80 | 0 | 86 | 291 |
| Peak Factor | | | | | | | | | | | | | | | | | 0.941 |
| High Int. | 04:45 PM | | | | 05:00 PM | | | | | | | | 05:15 PM | | | | |
| Volume | 69 | 0 | 6 | 75 | 0 | 67 | 81 | 148 | 0 | 0 | 0 | 0 | 6 | 80 | 0 | 86 | |
| Peak Factor | | | | 0.843 | | | | 0.914 | | | | | | | | 0.875 | |

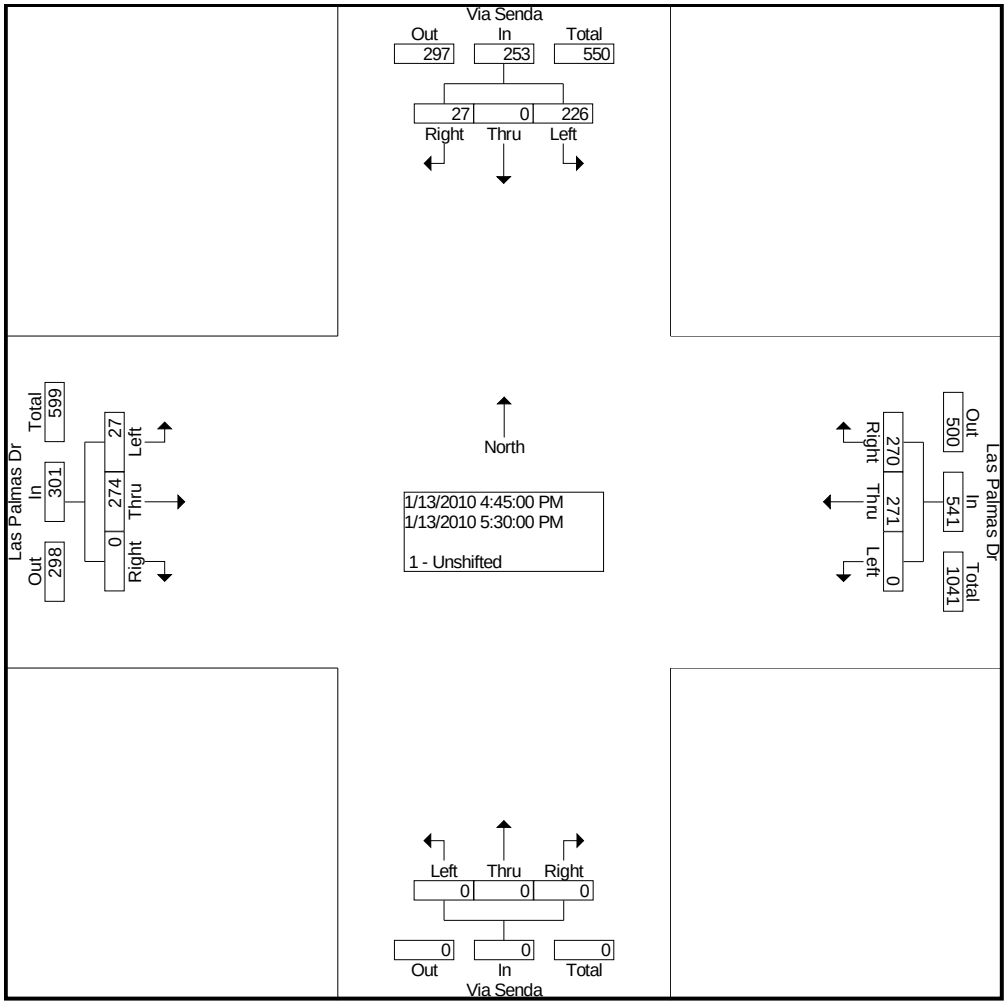

**Project Title:** PLAN SANTA BARBARA
**Intersection:** #49: La Cumbre Road & US 101 SB Ramps
**Description:** EXISTING CONDITIONS

**Date/Time:** AM PEAK HOUR

| | | | |
|---|---|---|---|
| Thru Lane: | 1600 vph | N-S Split Phase : | N |
| Left Lane: | 1600 vph | E-W Split Phase : | N |
| Double Lt Penalty: | 20 % | Lost Time (% of cycle) : | 10 |
| ITS: | 0 % | V/C Round Off (decs.) : | 3 |
| OLA Movements : | | | |
| FF Movements: | | | |

| APPROACH | MVMT | LANES | VOLUME | CAPACITY | V/C | ICU ANALYSIS | |
|---|---|---|---|---|---|---|---|
| Southbound | RT | 0.00 | 0 | 0 | 0.000 | N-S(1): | 0.324 * |
| | TH | 1.00 | 385 | 1,600 | 0.241 | N-S(2): | 0.241 |
| | LT | 2.00 | 449 | 2,560 | 0.175 * | E-W(1): | 0.145 |
| Westbound | RT | 0.00 | 0 | 0 | 0.000 | E-W(2): | 0.181 * |
| | TH | 0.00 | 0 | 0 | 0.000 * | | |
| | LT | 0.00 | 0 | 0 | 0.000 | V/C: | 0.505 |
| Northbound | RT | 1.00 | 239 | 1,600 | 0.149 * | Lost Time: | 0.100 |
| | TH | 2.00 | 422 | 3,200 | 0.132 | ITS: | 0.000 |
| | LT | 0.00 | 0 | 0 | 0.000 | | |
| Eastbound | RT | 1.00 | 110 | 1,600 | 0.069 | ICU: | 0.605 |
| | TH | 0.02 | 5 | 35 | 0.145 | | |
| | LT | 1.98 | 458 | 2,532 | 0.181 * | LOS: | B |

**Date/Time:** PM PEAK HOUR

| APPROACH | MVMT | LANES | VOLUME | CAPACITY | V/C | ICU ANALYSIS | |
|---|---|---|---|---|---|---|---|
| Southbound | RT | 0.00 | 0 | 0 | 0.000 | N-S(1): | 0.332 * |
| | TH | 1.00 | 385 | 1,600 | 0.241 | N-S(2): | 0.241 |
| | LT | 2.00 | 599 | 2,560 | 0.234 * | E-W(1): | 0.189 |
| Westbound | RT | 0.00 | 0 | 0 | 0.000 | E-W(2): | 0.236 * |
| | TH | 0.00 | 0 | 0 | 0.000 * | | |
| | LT | 0.00 | 0 | 0 | 0.000 | V/C: | 0.568 |
| Northbound | RT | 1.00 | 144 | 1,600 | 0.090 | Lost Time: | 0.100 |
| | TH | 2.00 | 314 | 3,200 | 0.098 * | ITS: | 0.000 |
| | LT | 0.00 | 0 | 0 | 0.000 | | |
| Eastbound | RT | 1.00 | 75 | 1,600 | 0.047 | ICU: | 0.668 |
| | TH | 0.00 | 1 | 5 | 0.189 | | |
| | LT | 2.00 | 604 | 2,556 | 0.236 * | LOS: | B |

* - Denotes critical movement

DRAFT

File Name : #49 LASPALMAS&US101SBRAMPS_AM
Site Code : 00000000
Start Date : 3/13/2008
Page No : 1

Groups Printed- Unshifted

| | LAS PALMAS DR Southbound | | | | US 101 SB RAMPS Westbound | | | | LAS PALMAS DR Northbound | | | | US 101 SB RAMPS Eastbound | | | | |
|---|---|---|---|---|---|---|---|---|---|---|---|---|---|---|---|---|---|
| Start Time | Left | Thru | Right | Peds | Left | Thru | Right | Peds | Left | Thru | Right | Peds | Left | Thru | Right | Peds | Int. Total |
| 07:00 AM | 48 | 47 | 0 | 0 | 0 | 0 | 0 | 0 | 0 | 80 | 13 | 0 | 63 | 1 | 12 | 0 | 264 |
| 07:15 AM | 64 | 67 | 0 | 0 | 0 | 0 | 0 | 0 | 0 | 77 | 22 | 1 | 65 | 0 | 20 | 0 | 316 |
| 07:30 AM | 115 | 93 | 0 | 0 | 0 | 0 | 0 | 0 | 0 | 80 | 36 | 0 | 67 | 0 | 28 | 0 | 419 |
| 07:45 AM | 120 | 95 | 0 | 0 | 0 | 0 | 0 | 0 | 0 | 160 | 80 | 0 | 146 | 1 | 21 | 0 | 623 |
| Total | 347 | 302 | 0 | 0 | 0 | 0 | 0 | 0 | 0 | 397 | 151 | 1 | 341 | 2 | 81 | 0 | 1622 |
| 08:00 AM | 75 | 100 | 0 | 0 | 0 | 0 | 0 | 0 | 0 | 91 | 73 | 0 | 122 | 2 | 44 | 0 | 507 |
| 08:15 AM | 139 | 97 | 0 | 0 | 0 | 0 | 0 | 0 | 0 | 91 | 50 | 0 | 123 | 2 | 17 | 0 | 519 |
| 08:30 AM | 110 | 59 | 0 | 0 | 0 | 0 | 0 | 0 | 0 | 92 | 36 | 0 | 85 | 1 | 19 | 0 | 402 |
| 08:45 AM | 73 | 86 | 0 | 0 | 0 | 0 | 0 | 0 | 0 | 92 | 43 | 0 | 105 | 0 | 16 | 0 | 415 |
| Total | 397 | 342 | 0 | 0 | 0 | 0 | 0 | 0 | 0 | 366 | 202 | 0 | 435 | 5 | 96 | 0 | 1843 |
| Grand Total | 744 | 644 | 0 | 0 | 0 | 0 | 0 | 0 | 0 | 763 | 353 | 1 | 776 | 7 | 177 | 0 | 3465 |
| Apprch % | 53.6 | 46.4 | 0 | 0 | 0 | 0 | 0 | 0 | 0 | 68.3 | 31.6 | 0.1 | 80.8 | 0.7 | 18.4 | 0 | |
| Total % | 21.5 | 18.6 | 0 | 0 | 0 | 0 | 0 | 0 | 0 | 22 | 10.2 | 0 | 22.4 | 0.2 | 5.1 | 0 | |

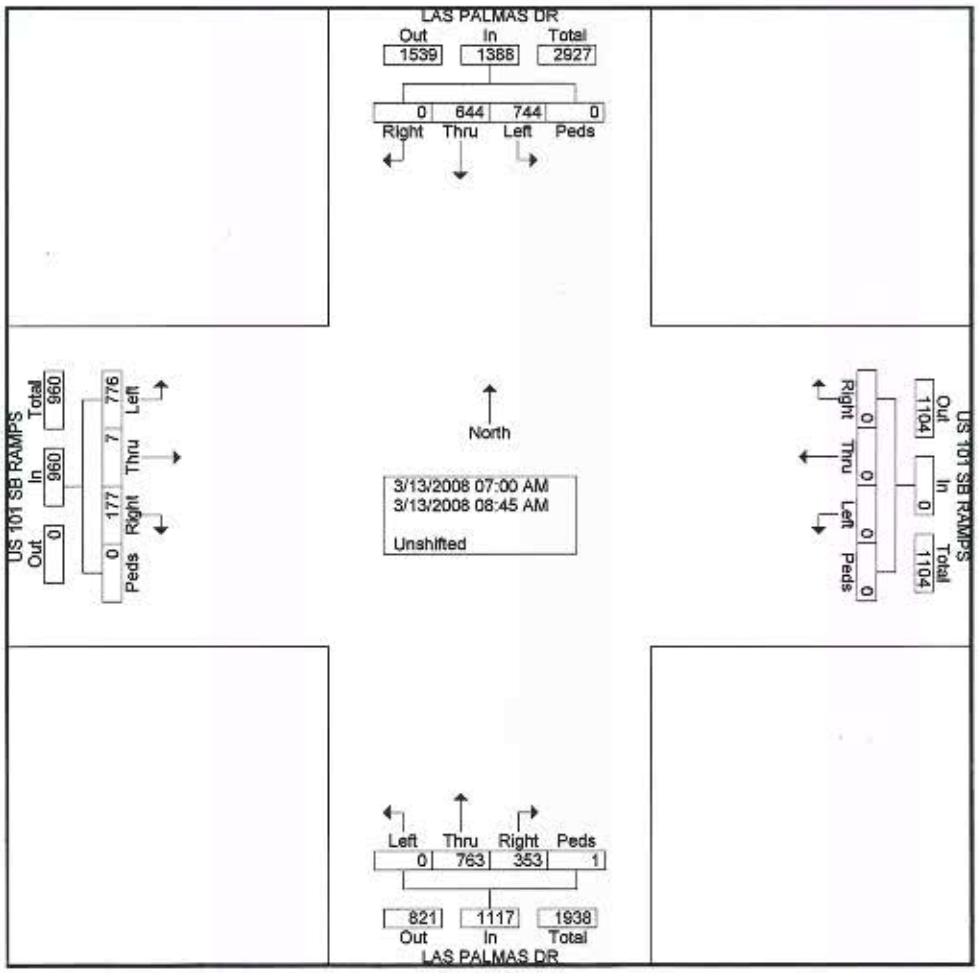

File Name : #49 LASPALMAS&US101SBRAMPS_AM
Site Code : 00000000
Start Date : 3/13/2008
Page No : 2

| | LAS PALMAS DR Southbound | | | | | US 101 SB RAMPS Westbound | | | | | LAS PALMAS DR Northbound | | | | | US 101 SB RAMPS Eastbound | | | | | |
|---|---|---|---|---|---|---|---|---|---|---|---|---|---|---|---|---|---|---|---|---|---|
| Start Time | Left | Thru | Right | Peds | App. Total | Left | Thru | Right | Peds | App. Total | Left | Thru | Right | Peds | App. Total | Left | Thru | Right | Peds | App. Total | Int. Total |
| Peak Hour Analysis From 07:00 AM to 08:45 AM - Peak 1 of 1 | | | | | | | | | | | | | | | | | | | | | |
| Peak Hour for Entire Intersection Begins at 07:30 AM | | | | | | | | | | | | | | | | | | | | | |
| 07:30 AM | 115 | 93 | 0 | 0 | 208 | 0 | 0 | 0 | 0 | 0 | 0 | 80 | 36 | 0 | 116 | 67 | 0 | 28 | 0 | 95 | 419 |
| 07:45 AM | 120 | 95 | 0 | 0 | 215 | 0 | 0 | 0 | 0 | 0 | 0 | **160** | **80** | **0** | **240** | **146** | **1** | **21** | **0** | **168** | **623** |
| 08:00 AM | 75 | **100** | 0 | 0 | 175 | 0 | 0 | 0 | 0 | 0 | 0 | 91 | 73 | 0 | 164 | 122 | **2** | **44** | **0** | **168** | **507** |
| **08:15 AM** | **139** | **97** | **0** | **0** | **236** | | | | | | | | | | | | | | | | |
| Total Volume | 449 | 385 | 0 | 0 | 834 | 0 | 0 | 0 | 0 | 0 | 0 | 422 | 239 | 0 | 661 | 458 | 5 | 110 | 0 | 573 | 2068 |
| % App. Total | 53.8 | 46.2 | 0 | 0 | | 0 | 0 | 0 | 0 | | 0 | 63.8 | 36.2 | 0 | | 79.9 | 0.9 | 19.2 | 0 | | |
| PHF | .808 | .963 | .000 | .000 | .883 | .000 | .000 | .000 | .000 | .000 | .000 | .659 | .747 | .000 | .689 | .784 | .625 | .625 | .000 | .853 | .830 |

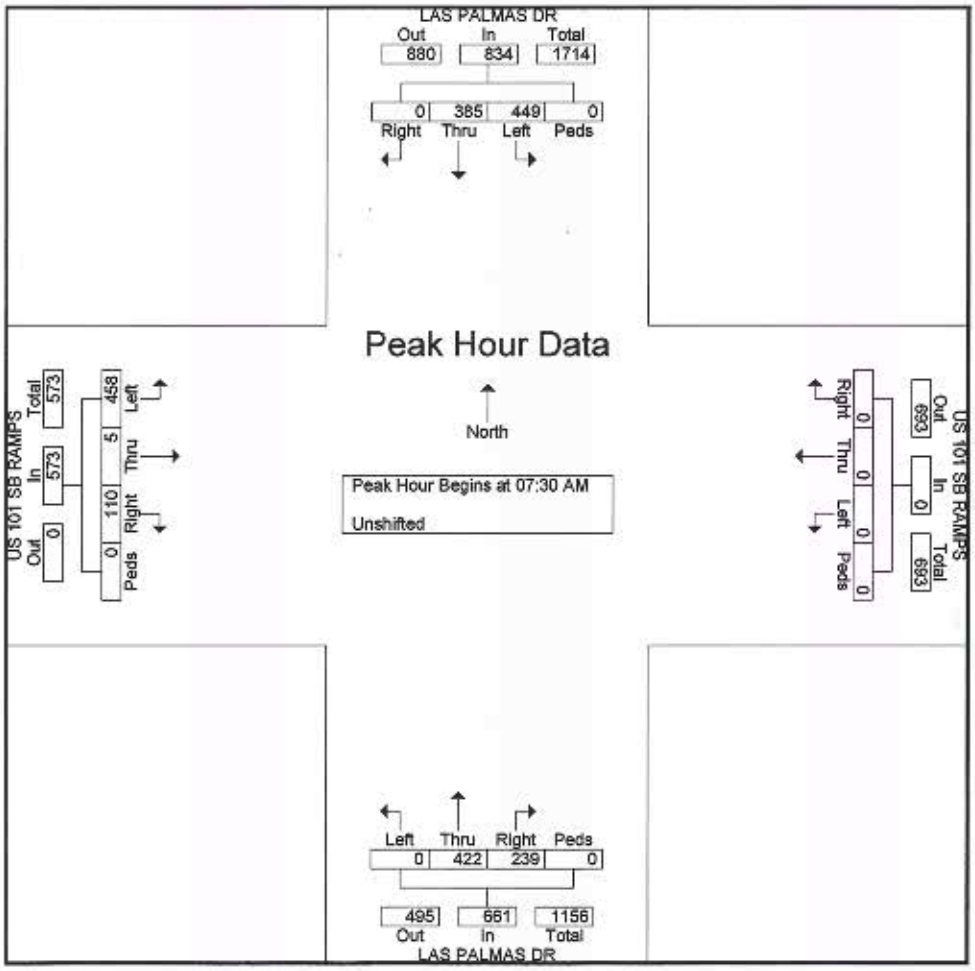

File Name : #49 LASPALMAS&US101SBRAMPS_PM
Site Code : 00000000
Start Date : 3/13/2008
Page No : 1

**Groups Printed- Unshifted**

| | LAS PALMAS DR Southbound | | | | US 101 SB RAMPS Westbound | | | | LAS PALMAS DR Northbound | | | | US 101 SB RAMPS Eastbound | | | | |
|---|---|---|---|---|---|---|---|---|---|---|---|---|---|---|---|---|---|
| Start Time | Left | Thru | Right | Peds | Left | Thru | Right | Peds | Left | Thru | Right | Peds | Left | Thru | Right | Peds | Int. Total |
| 04:00 PM | 118 | 98 | 0 | 0 | 0 | 0 | 0 | 0 | 0 | 97 | 56 | 0 | 108 | 16 | 8 | 0 | 501 |
| 04:15 PM | 131 | 125 | 0 | 0 | 0 | 0 | 0 | 0 | 0 | 81 | 36 | 0 | 119 | 0 | 12 | 0 | 504 |
| 04:30 PM | 120 | 101 | 0 | 1 | 0 | 0 | 0 | 0 | 0 | 76 | 31 | 0 | 115 | 1 | 8 | 0 | 453 |
| 04:45 PM | 163 | 100 | 0 | 0 | 0 | 0 | 0 | 0 | 0 | 72 | 29 | 3 | 158 | 0 | 14 | 0 | 539 |
| Total | 532 | 424 | 0 | 1 | 0 | 0 | 0 | 0 | 0 | 326 | 152 | 3 | 500 | 17 | 42 | 0 | 1997 |
| 05:00 PM | 158 | 118 | 0 | 0 | 0 | 0 | 0 | 0 | 0 | 73 | 41 | 0 | 162 | 0 | 14 | 0 | 566 |
| 05:15 PM | 147 | 93 | 0 | 0 | 0 | 0 | 0 | 0 | 0 | 88 | 36 | 0 | 152 | 1 | 25 | 0 | 542 |
| 05:30 PM | 131 | 74 | 0 | 1 | 0 | 0 | 0 | 0 | 0 | 81 | 38 | 1 | 132 | 0 | 22 | 0 | 480 |
| 05:45 PM | 105 | 104 | 0 | 0 | 0 | 0 | 0 | 0 | 0 | 75 | 23 | 1 | 127 | 0 | 15 | 0 | 450 |
| Total | 541 | 389 | 0 | 1 | 0 | 0 | 0 | 0 | 0 | 317 | 138 | 2 | 573 | 1 | 76 | 0 | 2038 |
| Grand Total | 1073 | 813 | 0 | 2 | 0 | 0 | 0 | 0 | 0 | 643 | 290 | 5 | 1073 | 18 | 118 | 0 | 4035 |
| Apprch % | 56.8 | 43.1 | 0 | 0.1 | 0 | 0 | 0 | 0 | 0 | 68.6 | 30.9 | 0.5 | 88.8 | 1.5 | 9.8 | 0 | |
| Total % | 26.6 | 20.1 | 0 | 0 | 0 | 0 | 0 | 0 | 0 | 15.9 | 7.2 | 0.1 | 26.6 | 0.4 | 2.9 | 0 | |

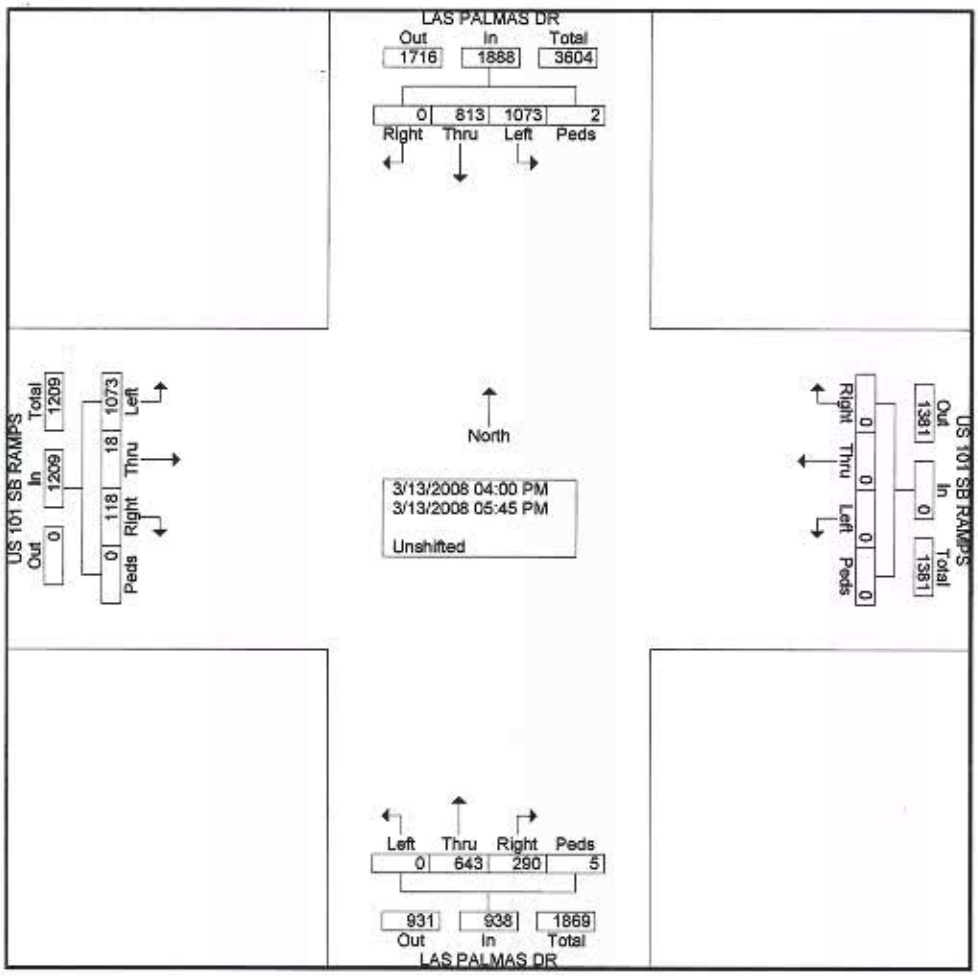

File Name : #49 LASPALMAS&US101SBRAMPS_PM
Site Code : 00000000
Start Date : 3/13/2008
Page No : 2

| | LAS PALMAS DR Southbound | | | | | US 101 SB RAMPS Westbound | | | | | LAS PALMAS DR Northbound | | | | | US 101 SB RAMPS Eastbound | | | | | |
|---|---|---|---|---|---|---|---|---|---|---|---|---|---|---|---|---|---|---|---|---|---|
| Start Time | Left | Thru | Right | Peds | App. Total | Left | Thru | Right | Peds | App. Total | Left | Thru | Right | Peds | App. Total | Left | Thru | Right | Peds | App. Total | Int. Total |
| Peak Hour Analysis From 04:00 PM to 05:45 PM - Peak 1 of 1 | | | | | | | | | | | | | | | | | | | | | |
| Peak Hour for Entire Intersection Begins at 04:45 PM | | | | | | | | | | | | | | | | | | | | | |
| 04:45 PM | 163 | 100 | 0 | 0 | 263 | 0 | 0 | 0 | 0 | 0 | 0 | 72 | 29 | 3 | 104 | 158 | 0 | 14 | 0 | 172 | 539 |
| 05:00 PM | 158 | 118 | | | 276 | | | | | | | | 41 | 0 | 114 | 162 | 0 | 14 | 0 | 176 | 566 |
| 05:15 PM | 147 | 93 | 0 | 0 | 240 | 0 | 0 | 0 | 0 | 0 | 0 | 88 | 36 | 0 | 124 | 152 | 1 | 25 | 0 | 178 | 542 |
| 05:30 PM | 131 | 74 | 0 | 1 | 206 | 0 | 0 | 0 | 0 | 0 | 0 | 81 | 38 | 1 | 120 | 132 | 0 | 22 | 0 | 154 | 480 |
| Total Volume | | | | | | | | | | | | | | | | | | | | | |
| % App. Total | 60.8 | 39.1 | 0 | 0.1 | | 0 | 0 | 0 | 0 | | 0 | 68 | 31.2 | 0.9 | | 88.8 | 0.1 | 11 | 0 | | |
| PHF | .919 | .816 | .000 | .250 | .892 | .000 | .000 | .000 | .000 | .000 | .000 | .892 | .878 | .333 | .931 | .932 | .250 | .750 | .000 | .955 | .939 |

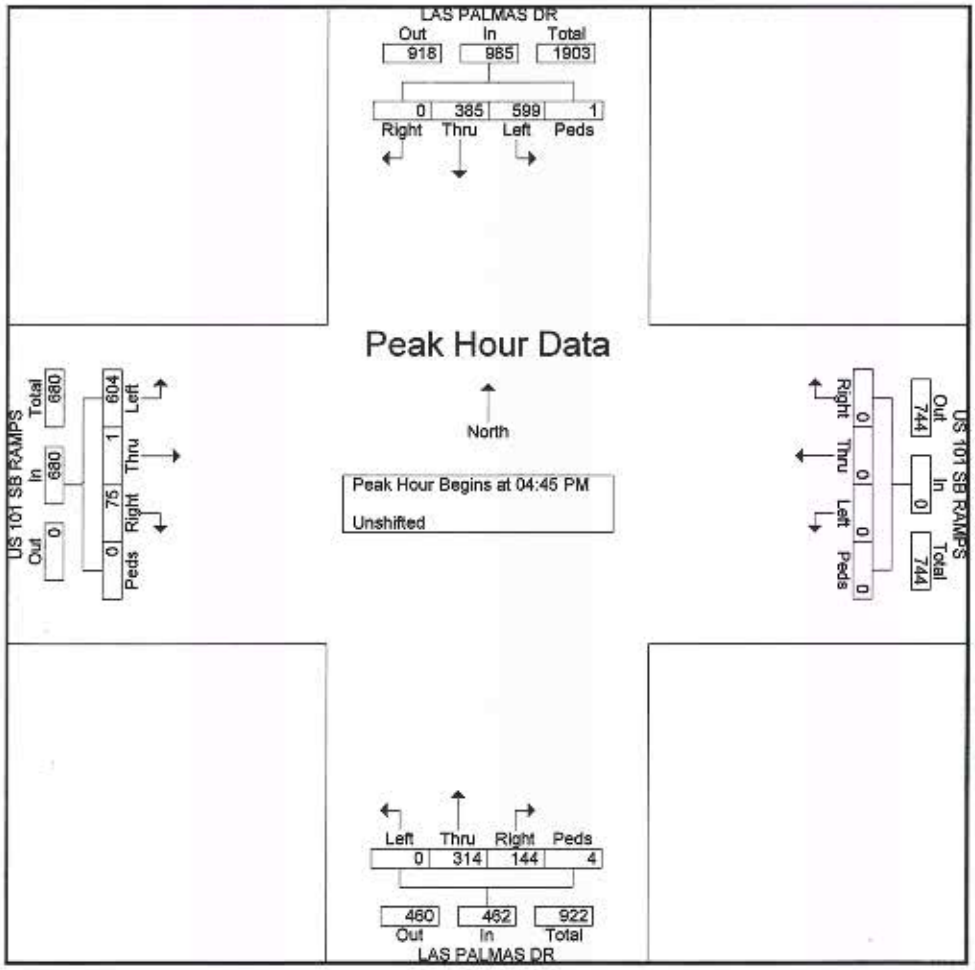

File Name : #49 LASPALMAS&US101SBRAMPS_AM
Site Code : 00000000
Start Date : 3/13/2008
Page No : 3
NB

File Name : #49 LASPALMAS&US101SBRAMPS_AM
Site Code : 00000000
Start Date : 3/13/2008
Page No : 4

SB

File Name : #49 LASPALMAS&US101SBRAMPS_AM
Site Code : 00000000
Start Date : 3/13/2008
Page No : 5

WB

File Name : #49 LASPALMAS&US101SBRAMPS_AM
Site Code : 00000000
Start Date : 3/13/2008
Page No : 6

# APPENDIX B

## LEVEL OF SERVICE WORKSHEETS

# EXISTING CONDITIONS
# LOS WORKSHEETS

# WEEKDAY AM PEAK HOUR

Valle Verde Home Project
Existing
AM Peak Hour

Scenario Report

| | |
|---|---|
| Scenario: | Existing AM |
| Command: | Existing AM |
| Volume: | Existing AM |
| Geometry: | Existing |
| Impact Fee: | Default Impact Fee |
| Trip Generation: | none |
| Trip Distribution: | none |
| Paths: | Default Path |
| Routes: | Default Route |
| Configuration: | Existing AM |

Valle Verde Home Project
Existing
AM Peak Hour

Turning Movement Report
none

| Volume | Northbound | | | Southbound | | | Eastbound | | | Westbound | | | Total |
|---|---|---|---|---|---|---|---|---|---|---|---|---|---|
| Type | Left | Thru | Right | Left | Thru | Right | Left | Thru | Right | Left | Thru | Right | Volume |
| #6 Calle de los Amigos at Modoc Rd | | | | | | | | | | | | | |
| Base | 96 | 0 | 45 | 0 | 0 | 0 | 0 | 194 | 52 | 19 | 306 | 0 | 712 |
| Added | 0 | 0 | 0 | 0 | 0 | 0 | 0 | 0 | 0 | 0 | 0 | 0 | 0 |
| Total | 96 | 0 | 45 | 0 | 0 | 0 | 0 | 194 | 52 | 19 | 306 | 0 | 712 |
| #7 Via Senda at Modoc Rd | | | | | | | | | | | | | |
| Base | 37 | 0 | 136 | 0 | 0 | 0 | 0 | 116 | 94 | 175 | 131 | 0 | 689 |
| Added | 0 | 0 | 0 | 0 | 0 | 0 | 0 | 0 | 0 | 0 | 0 | 0 | 0 |
| Total | 37 | 0 | 136 | 0 | 0 | 0 | 0 | 116 | 94 | 175 | 131 | 0 | 689 |
| #8 Via Senda at Las Palmas Dr | | | | | | | | | | | | | |
| Base | 0 | 0 | 0 | 237 | 0 | 34 | 26 | 283 | 0 | 0 | 337 | 146 | 1063 |
| Added | 0 | 0 | 0 | 0 | 0 | 0 | 0 | 0 | 0 | 0 | 0 | 0 | 0 |
| Total | 0 | 0 | 0 | 237 | 0 | 34 | 26 | 283 | 0 | 0 | 337 | 146 | 1063 |
| #9 Las Palmas/S La Cumbre Rd at US-101 SB Ramps | | | | | | | | | | | | | |
| Base | 0 | 422 | 239 | 449 | 385 | 0 | 458 | 5 | 110 | 0 | 0 | 0 | 2068 |
| Added | 0 | 0 | 0 | 0 | 0 | 0 | 0 | 0 | 0 | 0 | 0 | 0 | 0 |
| Total | 0 | 422 | 239 | 449 | 385 | 0 | 458 | 5 | 110 | 0 | 0 | 0 | 2068 |

Valle Verde Home Project
Existing
AM Peak Hour

Impact Analysis Report
Level Of Service

| Intersection | Base LOS | Base Del/ Veh | Base V/ C | Future LOS | Future Del/ Veh | Future V/ C | Change in |
|---|---|---|---|---|---|---|---|
| # 6 Calle de los Amigos at Modoc R | B | 12.8 | 0.000 | B | 12.8 | 0.000 | + 0.000 D/V |
| # 7 Via Senda at Modoc Rd | A | 9.6 | 0.405 | A | 9.6 | 0.405 | + 0.000 V/C |
| # 8 Via Senda at Las Palmas Dr | B | 12.9 | 0.540 | B | 12.9 | 0.540 | + 0.000 V/C |
| # 9 Las Palmas/S La Cumbre Rd at | B | xxxxx | 0.606 | B | xxxxx | 0.606 | + 0.000 V/C |

Traffix 7.9.0215 (c) 2008 Dowling Assoc. Licensed to MMA, LONG BEACH, CA

Valle Verde Home Project
Existing
AM Peak Hour

Level Of Service Computation Report
2000 HCM Unsignalized Method (Base Volume Alternative)

Intersection #6 Calle de los Amigos at Modoc Rd

Average Delay (sec/veh): 2.7 Worst Case Level Of Service: B[ 12.8]

| Street Name: | Calle de los Amigos | | | | | | Modoc Rd | | | | | |
|---|---|---|---|---|---|---|---|---|---|---|---|---|
| Approach: | North Bound | | | South Bound | | | East Bound | | | West Bound | | |
| Movement: | L - T - R | | | L - T - R | | | L - T - R | | | L - T - R | | |
| Control: | Stop Sign | | | Stop Sign | | | Uncontrolled | | | Uncontrolled | | |
| Rights: | Include | | | Include | | | Include | | | Include | | |
| Lanes: | 1 0 0 0 1 | | | 0 0 0 0 0 | | | 0 0 0 1 0 | | | 1 0 1 0 0 | | |
| Volume Module: | | | | | | | | | | | | |
| Base Vol: | 96 | 0 | 45 | 0 | 0 | 0 | 0 | 194 | 52 | 19 | 306 | 0 |
| Growth Adj: | 1.00 | 1.00 | 1.00 | 1.00 | 1.00 | 1.00 | 1.00 | 1.00 | 1.00 | 1.00 | 1.00 | 1.00 |
| Initial Bse: | 96 | 0 | 45 | 0 | 0 | 0 | 0 | 194 | 52 | 19 | 306 | 0 |
| User Adj: | 1.00 | 1.00 | 1.00 | 1.00 | 1.00 | 1.00 | 1.00 | 1.00 | 1.00 | 1.00 | 1.00 | 1.00 |
| PHF Adj: | 1.00 | 1.00 | 1.00 | 1.00 | 1.00 | 1.00 | 1.00 | 1.00 | 1.00 | 1.00 | 1.00 | 1.00 |
| PHF Volume: | 96 | 0 | 45 | 0 | 0 | 0 | 0 | 194 | 52 | 19 | 306 | 0 |
| Reduct Vol: | 0 | 0 | 0 | 0 | 0 | 0 | 0 | 0 | 0 | 0 | 0 | 0 |
| FinalVolume: | 96 | 0 | 45 | 0 | 0 | 0 | 0 | 194 | 52 | 19 | 306 | 0 |
| Critical Gap Module: | | | | | | | | | | | | |
| Critical Gp: | 6.4 | xxxx | 6.2 | xxxxx | xxxx | xxxxx | xxxxx | xxxx | xxxxx | 4.1 | xxxx | xxxxx |
| FollowUpTim: | 3.5 | xxxx | 3.3 | xxxxx | xxxx | xxxxx | xxxxx | xxxx | xxxxx | 2.2 | xxxx | xxxxx |
| Capacity Module: | | | | | | | | | | | | |
| Cnflict Vol: | 564 | xxxx | 220 | xxxx | xxxx | xxxxx | xxxx | xxxx | xxxxx | 246 | xxxx | xxxxx |
| Potent Cap.: | 490 | xxxx | 825 | xxxx | xxxx | xxxxx | xxxx | xxxx | xxxxx | 1332 | xxxx | xxxxx |
| Move Cap.: | 485 | xxxx | 825 | xxxx | xxxx | xxxxx | xxxx | xxxx | xxxxx | 1332 | xxxx | xxxxx |
| Volume/Cap: | 0.20 | xxxx | 0.05 | xxxx | xxxx | xxxx | xxxx | xxxx | xxxx | 0.01 | xxxx | xxxx |
| Level Of Service Module: | | | | | | | | | | | | |
| 2Way95thQ: | 0.7 | xxxx | 0.2 | xxxx | xxxx | xxxxx | xxxx | xxxx | xxxxx | 0.0 | xxxx | xxxxx |
| Control Del: | 14.2 | xxxx | 9.6 | xxxxx | xxxx | xxxxx | xxxxx | xxxx | xxxxx | 7.7 | xxxx | xxxxx |
| LOS by Move: | B | * | A | * | * | * | * | * | * | A | * | * |
| Movement: | LT - LTR - RT | | | LT - LTR - RT | | | LT - LTR - RT | | | LT - LTR - RT | | |
| Shared Cap.: | xxxx | xxxx | xxxxx | xxxx | xxxx | xxxxx | xxxx | xxxx | xxxxx | xxxx | xxxx | xxxxx |
| SharedQueue: | xxxxx | xxxx | xxxxx | xxxxx | xxxx | xxxxx | xxxxx | xxxx | xxxxx | xxxxx | xxxx | xxxxx |
| Shrd ConDel: | xxxxx | xxxx | xxxxx | xxxxx | xxxx | xxxxx | xxxxx | xxxx | xxxxx | xxxxx | xxxx | xxxxx |
| Shared LOS: | * | * | * | * | * | * | * | * | * | * | * | * |
| ApproachDel: | 12.8 | | | xxxxxx | | | xxxxxx | | | xxxxxx | | |
| ApproachLOS: | B | | | * | | | * | | | * | | |

Note: Queue reported is the number of cars per lane.

Valle Verde Home Project
Existing
AM Peak Hour

Level Of Service Computation Report
2000 HCM 4-Way Stop Method (Base Volume Alternative)

Intersection #7 Via Senda at Modoc Rd

Cycle (sec): 100 Critical Vol./Cap.(X): 0.405
Loss Time (sec): 0 (Y+R=4.0 sec) Average Delay (sec/veh): 9.6
Optimal Cycle: 0 Level Of Service: A

| Street Name: | Via Senda | | | | | | Modoc Rd | | | | | |
|---|---|---|---|---|---|---|---|---|---|---|---|---|
| Approach: | North Bound | | | South Bound | | | East Bound | | | West Bound | | |
| Movement: | L - | T - | R | L - | T - | R | L - | T - | R | L - | T - | R |
| Control: | Stop Sign | | | Stop Sign | | | Stop Sign | | | Stop Sign | | |
| Rights: | Include | | | Include | | | Include | | | Include | | |
| Min. Green: | 0 | 0 | 0 | 0 | 0 | 0 | 0 | 0 | 0 | 0 | 0 | 0 |
| Lanes: | 0 0 | 1! 0 | 0 | 0 0 | 0 0 | 0 | 0 0 | 0 1 | 0 | 0 1 | 0 0 | 0 |
| Volume Module: | | | | | | | | | | | | |
| Base Vol: | 37 | 0 | 136 | 0 | 0 | 0 | 0 | 116 | 94 | 175 | 131 | 0 |
| Growth Adj: | 1.00 | 1.00 | 1.00 | 1.00 | 1.00 | 1.00 | 1.00 | 1.00 | 1.00 | 1.00 | 1.00 | 1.00 |
| Initial Bse: | 37 | 0 | 136 | 0 | 0 | 0 | 0 | 116 | 94 | 175 | 131 | 0 |
| User Adj: | 1.00 | 1.00 | 1.00 | 1.00 | 1.00 | 1.00 | 1.00 | 1.00 | 1.00 | 1.00 | 1.00 | 1.00 |
| PHF Adj: | 1.00 | 1.00 | 1.00 | 1.00 | 1.00 | 1.00 | 1.00 | 1.00 | 1.00 | 1.00 | 1.00 | 1.00 |
| PHF Volume: | 37 | 0 | 136 | 0 | 0 | 0 | 0 | 116 | 94 | 175 | 131 | 0 |
| Reduct Vol: | 0 | 0 | 0 | 0 | 0 | 0 | 0 | 0 | 0 | 0 | 0 | 0 |
| Reduced Vol: | 37 | 0 | 136 | 0 | 0 | 0 | 0 | 116 | 94 | 175 | 131 | 0 |
| PCE Adj: | 1.00 | 1.00 | 1.00 | 1.00 | 1.00 | 1.00 | 1.00 | 1.00 | 1.00 | 1.00 | 1.00 | 1.00 |
| MLF Adj: | 1.00 | 1.00 | 1.00 | 1.00 | 1.00 | 1.00 | 1.00 | 1.00 | 1.00 | 1.00 | 1.00 | 1.00 |
| FinalVolume: | 37 | 0 | 136 | 0 | 0 | 0 | 0 | 116 | 94 | 175 | 131 | 0 |
| Saturation Flow Module: | | | | | | | | | | | | |
| Adjustment: | 1.00 | 1.00 | 1.00 | 1.00 | 1.00 | 1.00 | 1.00 | 1.00 | 1.00 | 1.00 | 1.00 | 1.00 |
| Lanes: | 0.21 | 0.00 | 0.79 | 0.00 | 0.00 | 0.00 | 0.00 | 0.55 | 0.45 | 0.57 | 0.43 | 0.00 |
| Final Sat.: | 156 | 0 | 574 | 0 | 0 | 0 | 0 | 437 | 354 | 432 | 324 | 0 |
| Capacity Analysis Module: | | | | | | | | | | | | |
| Vol/Sat: | 0.24 | xxxx | 0.24 | xxxx | xxxx | xxxx | xxxx | 0.27 | 0.27 | 0.40 | 0.40 | xxxx |
| Crit Moves: | **** | | | | | | | **** | | **** | | |
| Delay/Veh: | 8.8 | 0.0 | 8.8 | 0.0 | 0.0 | 0.0 | 0.0 | 8.9 | 8.9 | 10.6 | 10.6 | 0.0 |
| Delay Adj: | 1.00 | 1.00 | 1.00 | 1.00 | 1.00 | 1.00 | 1.00 | 1.00 | 1.00 | 1.00 | 1.00 | 1.00 |
| AdjDel/Veh: | 8.8 | 0.0 | 8.8 | 0.0 | 0.0 | 0.0 | 0.0 | 8.9 | 8.9 | 10.6 | 10.6 | 0.0 |
| LOS by Move: | A | * | A | * | * | * | * | A | A | B | B | * |
| ApproachDel: | 8.8 | | | xxxxxx | | | | 8.9 | | 10.6 | | |
| Delay Adj: | 1.00 | | | xxxxx | | | | 1.00 | | 1.00 | | |
| ApprAdjDel: | 8.8 | | | xxxxxx | | | | 8.9 | | 10.6 | | |
| LOS by Appr: | A | | | * | | | | A | | B | | |
| AllWayAvgQ: | 0.3 | 0.3 | 0.3 | 0.0 | 0.0 | 0.0 | 0.3 | 0.3 | 0.3 | 0.6 | 0.6 | 0.6 |

Note: Queue reported is the number of cars per lane.

Valle Verde Home Project
Existing
AM Peak Hour

Level Of Service Computation Report
2000 HCM 4-Way Stop Method (Base Volume Alternative)

Intersection #8 Via Senda at Las Palmas Dr

Cycle (sec): 100 Critical Vol./Cap.(X): 0.540
Loss Time (sec): 0 (Y+R=4.0 sec) Average Delay (sec/veh): 12.9
Optimal Cycle: 0 Level Of Service: B

| Street Name: | Via Senda | | | | | | Las Palmas Dr | | | | | |
|---|---|---|---|---|---|---|---|---|---|---|---|---|
| Approach: | North Bound | | | South Bound | | | East Bound | | | West Bound | | |
| Movement: | L - | T - | R | L - | T - | R | L - | T - | R | L - | T - | R |
| Control: | Stop Sign | | | Stop Sign | | | Stop Sign | | | Stop Sign | | |
| Rights: | Include | | | Include | | | Include | | | Include | | |
| Min. Green: | 0 | 0 | 0 | 0 | 0 | 0 | 0 | 0 | 0 | 0 | 0 | 0 |
| Lanes: | 0 0 | 0 0 | 0 | 0 0 | 1! 0 | 0 | 0 1 | 0 0 | 0 | 0 0 | 1 0 | 1 |
| Volume Module: | | | | | | | | | | | | |
| Base Vol: | 0 | 0 | 0 | 237 | 0 | 34 | 26 | 283 | 0 | 0 | 337 | 146 |
| Growth Adj: | 1.00 | 1.00 | 1.00 | 1.00 | 1.00 | 1.00 | 1.00 | 1.00 | 1.00 | 1.00 | 1.00 | 1.00 |
| Initial Bse: | 0 | 0 | 0 | 237 | 0 | 34 | 26 | 283 | 0 | 0 | 337 | 146 |
| User Adj: | 1.00 | 1.00 | 1.00 | 1.00 | 1.00 | 1.00 | 1.00 | 1.00 | 1.00 | 1.00 | 1.00 | 1.00 |
| PHF Adj: | 1.00 | 1.00 | 1.00 | 1.00 | 1.00 | 1.00 | 1.00 | 1.00 | 1.00 | 1.00 | 1.00 | 1.00 |
| PHF Volume: | 0 | 0 | 0 | 237 | 0 | 34 | 26 | 283 | 0 | 0 | 337 | 146 |
| Reduct Vol: | 0 | 0 | 0 | 0 | 0 | 0 | 0 | 0 | 0 | 0 | 0 | 0 |
| Reduced Vol: | 0 | 0 | 0 | 237 | 0 | 34 | 26 | 283 | 0 | 0 | 337 | 146 |
| PCE Adj: | 1.00 | 1.00 | 1.00 | 1.00 | 1.00 | 1.00 | 1.00 | 1.00 | 1.00 | 1.00 | 1.00 | 1.00 |
| MLF Adj: | 1.00 | 1.00 | 1.00 | 1.00 | 1.00 | 1.00 | 1.00 | 1.00 | 1.00 | 1.00 | 1.00 | 1.00 |
| FinalVolume: | 0 | 0 | 0 | 237 | 0 | 34 | 26 | 283 | 0 | 0 | 337 | 146 |
| Saturation Flow Module: | | | | | | | | | | | | |
| Adjustment: | 1.00 | 1.00 | 1.00 | 1.00 | 1.00 | 1.00 | 1.00 | 1.00 | 1.00 | 1.00 | 1.00 | 1.00 |
| Lanes: | 0.00 | 0.00 | 0.00 | 0.87 | 0.00 | 0.13 | 0.08 | 0.92 | 0.00 | 0.00 | 1.00 | 1.00 |
| Final Sat.: | 0 | 0 | 0 | 521 | 0 | 75 | 55 | 594 | 0 | 0 | 624 | 710 |
| Capacity Analysis Module: | | | | | | | | | | | | |
| Vol/Sat: | xxxx | xxxx | xxxx | 0.46 | xxxx | 0.46 | 0.48 | 0.48 | xxxx | xxxx | 0.54 | 0.21 |
| Crit Moves: | | | | **** | | | | **** | | | **** | |
| Delay/Veh: | 0.0 | 0.0 | 0.0 | 13.0 | 0.0 | 13.0 | 12.9 | 12.9 | 0.0 | 0.0 | 14.5 | 8.9 |
| Delay Adj: | 1.00 | 1.00 | 1.00 | 1.00 | 1.00 | 1.00 | 1.00 | 1.00 | 1.00 | 1.00 | 1.00 | 1.00 |
| AdjDel/Veh: | 0.0 | 0.0 | 0.0 | 13.0 | 0.0 | 13.0 | 12.9 | 12.9 | 0.0 | 0.0 | 14.5 | 8.9 |
| LOS by Move: | * | * | * | B | * | B | B | B | * | * | B | A |
| ApproachDel: | xxxxxx | | | 13.0 | | | 12.9 | | | 12.8 | | |
| Delay Adj: | xxxxx | | | 1.00 | | | 1.00 | | | 1.00 | | |
| ApprAdjDel: | xxxxxx | | | 13.0 | | | 12.9 | | | 12.8 | | |
| LOS by Appr: | * | | | B | | | B | | | B | | |
| AllWayAvgQ: | 0.0 | 0.0 | 0.0 | 0.7 | 0.7 | 0.7 | 0.8 | 0.8 | 0.8 | 0.0 | 1.1 | 0.2 |

Note: Queue reported is the number of cars per lane.

Valle Verde Home Project
Existing
AM Peak Hour

Level Of Service Computation Report
ICU 1(Loss as Cycle Length %) Method (Base Volume Alternative)

Intersection #9 Las Palmas/S La Cumbre Rd at US-101 SB Ramps

| | | | |
|---|---|---|---|
| Cycle (sec): | 100 | Critical Vol./Cap.(X): | 0.606 |
| Loss Time (sec): | 10 (Y+R=4.0 sec) | Average Delay (sec/veh): | xxxxxx |
| Optimal Cycle: | 40 | Level Of Service: | B |

| Approach: | North Bound | | | South Bound | | | East Bound | | | West Bound | | |
|---|---|---|---|---|---|---|---|---|---|---|---|---|
| Movement: | L - | T - | R | L - | T - | R | L - | T - | R | L - | T - | R |
| Control: | Protected | | | Protected | | | Protected | | | Protected | | |
| Rights: | Include | | | Include | | | Include | | | Include | | |
| Min. Green: | 0 | 0 | 0 | 0 | 0 | 0 | 0 | 0 | 0 | 0 | 0 | 0 |
| Lanes: | 0 0 | 2 0 | 1 | 2 0 | 1 0 | 0 | 1 1 | 0 0 | 1 | 0 0 | 0 0 | 0 |
| Volume Module: | | | | | | | | | | | | |
| Base Vol: | 0 | 422 | 239 | 449 | 385 | 0 | 458 | 5 | 110 | 0 | 0 | 0 |
| Growth Adj: | 1.00 | 1.00 | 1.00 | 1.00 | 1.00 | 1.00 | 1.00 | 1.00 | 1.00 | 1.00 | 1.00 | 1.00 |
| Initial Bse: | 0 | 422 | 239 | 449 | 385 | 0 | 458 | 5 | 110 | 0 | 0 | 0 |
| User Adj: | 1.00 | 1.00 | 1.00 | 1.00 | 1.00 | 1.00 | 1.00 | 1.00 | 1.00 | 1.00 | 1.00 | 1.00 |
| PHF Adj: | 1.00 | 1.00 | 1.00 | 1.00 | 1.00 | 1.00 | 1.00 | 1.00 | 1.00 | 1.00 | 1.00 | 1.00 |
| PHF Volume: | 0 | 422 | 239 | 449 | 385 | 0 | 458 | 5 | 110 | 0 | 0 | 0 |
| Reduct Vol: | 0 | 0 | 0 | 0 | 0 | 0 | 0 | 0 | 0 | 0 | 0 | 0 |
| Reduced Vol: | 0 | 422 | 239 | 449 | 385 | 0 | 458 | 5 | 110 | 0 | 0 | 0 |
| PCE Adj: | 1.00 | 1.00 | 1.00 | 1.00 | 1.00 | 1.00 | 1.00 | 1.00 | 1.00 | 1.00 | 1.00 | 1.00 |
| MLF Adj: | 1.00 | 1.00 | 1.00 | 1.00 | 1.00 | 1.00 | 1.00 | 1.00 | 1.00 | 1.00 | 1.00 | 1.00 |
| FinalVolume: | 0 | 422 | 239 | 449 | 385 | 0 | 458 | 5 | 110 | 0 | 0 | 0 |
| Saturation Flow Module: | | | | | | | | | | | | |
| Sat/Lane: | 1600 | 1600 | 1600 | 1600 | 1600 | 1600 | 1600 | 1600 | 1600 | 1600 | 1600 | 1600 |
| Adjustment: | 1.00 | 1.00 | 1.00 | 0.80 | 1.00 | 1.00 | 0.80 | 1.00 | 1.00 | 1.00 | 1.00 | 1.00 |
| Lanes: | 0.00 | 2.00 | 1.00 | 2.00 | 1.00 | 0.00 | 1.98 | 0.02 | 1.00 | 0.00 | 0.00 | 0.00 |
| Final Sat.: | 0 | 3200 | 1600 | 2560 | 1600 | 0 | 2532 | 35 | 1600 | 0 | 0 | 0 |
| Capacity Analysis Module: | | | | | | | | | | | | |
| Vol/Sat: | 0.00 | 0.13 | 0.15 | 0.18 | 0.24 | 0.00 | 0.18 | 0.14 | 0.07 | 0.00 | 0.00 | 0.00 |
| Crit Moves: | | | **** | **** | | | **** | | | | | |

Valle Verde Home Project
Existing
AM Peak Hour

Scenario Report

| | |
|---|---|
| Scenario: | Existing AM |
| Command: | Existing AM |
| Volume: | Existing AM |
| Geometry: | Existing |
| Impact Fee: | Default Impact Fee |
| Trip Generation: | none |
| Trip Distribution: | none |
| Paths: | Default Path |
| Routes: | Default Route |
| Configuration: | Existing AM |

Valle Verde Home Project
Existing
AM Peak Hour

Turning Movement Report
none

| Volume | Northbound | | | Southbound | | | Eastbound | | | Westbound | | | Total |
|---|---|---|---|---|---|---|---|---|---|---|---|---|---|
| Type | Left | Thru | Right | Left | Thru | Right | Left | Thru | Right | Left | Thru | Right | Volume |
| #6 Calle de los Amigos at Modoc Rd | | | | | | | | | | | | | |
| Base | 96 | 0 | 45 | 0 | 0 | 0 | 0 | 194 | 52 | 19 | 306 | 0 | 712 |
| Added | 0 | 0 | 0 | 0 | 0 | 0 | 0 | 0 | 0 | 0 | 0 | 0 | 0 |
| Total | 96 | 0 | 45 | 0 | 0 | 0 | 0 | 194 | 52 | 19 | 306 | 0 | 712 |
| #7 Via Senda at Modoc Rd | | | | | | | | | | | | | |
| Base | 37 | 0 | 136 | 0 | 0 | 0 | 0 | 116 | 94 | 175 | 131 | 0 | 689 |
| Added | 0 | 0 | 0 | 0 | 0 | 0 | 0 | 0 | 0 | 0 | 0 | 0 | 0 |
| Total | 37 | 0 | 136 | 0 | 0 | 0 | 0 | 116 | 94 | 175 | 131 | 0 | 689 |
| #8 Via Senda at Las Palmas Dr | | | | | | | | | | | | | |
| Base | 0 | 0 | 0 | 237 | 0 | 34 | 26 | 283 | 0 | 0 | 337 | 146 | 1063 |
| Added | 0 | 0 | 0 | 0 | 0 | 0 | 0 | 0 | 0 | 0 | 0 | 0 | 0 |
| Total | 0 | 0 | 0 | 237 | 0 | 34 | 26 | 283 | 0 | 0 | 337 | 146 | 1063 |
| #9 Las Palmas/S La Cumbre Rd at US-101 SB Ramps | | | | | | | | | | | | | |
| Base | 0 | 422 | 239 | 449 | 385 | 0 | 458 | 5 | 110 | 0 | 0 | 0 | 2068 |
| Added | 0 | 0 | 0 | 0 | 0 | 0 | 0 | 0 | 0 | 0 | 0 | 0 | 0 |
| Total | 0 | 422 | 239 | 449 | 385 | 0 | 458 | 5 | 110 | 0 | 0 | 0 | 2068 |

Valle Verde Home Project
Existing
AM Peak Hour

Impact Analysis Report
Level Of Service

| Intersection | Base LOS | Base Del/ Veh | Base V/ C | Future LOS | Future Del/ Veh | Future V/ C | Change in |
|---|---|---|---|---|---|---|---|
| # 6 Calle de los Amigos at Modoc R | B | 12.8 | 0.000 | B | 12.8 | 0.000 | + 0.000 D/V |
| # 7 Via Senda at Modoc Rd | A | 9.6 | 0.405 | A | 9.6 | 0.405 | + 0.000 V/C |
| # 8 Via Senda at Las Palmas Dr | B | 12.9 | 0.540 | B | 12.9 | 0.540 | + 0.000 V/C |
| # 9 Las Palmas/S La Cumbre Rd at | C | 26.1 | 0.534 | C | 26.1 | 0.534 | + 0.000 D/V |

Traffix 7.9.0215 (c) 2008 Dowling Assoc. Licensed to MMA, LONG BEACH, CA

Valle Verde Home Project
Existing
AM Peak Hour

Level Of Service Computation Report
2000 HCM Unsignalized Method (Base Volume Alternative)

Intersection #6 Calle de los Amigos at Modoc Rd

Average Delay (sec/veh): 2.7 Worst Case Level Of Service: B[ 12.8]

| Street Name: | Calle de los Amigos | | | | | | | | | Modoc Rd | | | | | | | | |
|---|---|---|---|---|---|---|---|---|---|---|---|---|---|---|---|---|---|---|
| Approach: | North Bound | | | | | South Bound | | | | | East Bound | | | | | West Bound | | |
| Movement: | L | - | T | - | R | L | - | T | - | R | L | - | T | - | R | L | - | T | - | R |
| Control: | Stop Sign | | | | | Stop Sign | | | | | Uncontrolled | | | | | Uncontrolled | | | | |
| Rights: | Include | | | | | Include | | | | | Include | | | | | Include | | | | |
| Lanes: | 1 | 0 | 0 | 0 | 1 | 0 | 0 | 0 | 0 | 0 | 0 | 0 | 0 | 1 | 0 | 1 | 0 | 1 | 0 | 0 |
| Volume Module: | | | | | | | | | | | | | | | | | | | | |
| Base Vol: | 96 | | 0 | | 45 | 0 | | 0 | | 0 | 0 | | 194 | | 52 | 19 | | 306 | | 0 |
| Growth Adj: | 1.00 | 1.00 | | 1.00 | | 1.00 | 1.00 | | 1.00 | | 1.00 | 1.00 | | 1.00 | | 1.00 | 1.00 | | 1.00 | |
| Initial Bse: | 96 | | 0 | | 45 | 0 | | 0 | | 0 | 0 | | 194 | | 52 | 19 | | 306 | | 0 |
| User Adj: | 1.00 | 1.00 | | 1.00 | | 1.00 | 1.00 | | 1.00 | | 1.00 | 1.00 | | 1.00 | | 1.00 | 1.00 | | 1.00 | |
| PHF Adj: | 1.00 | 1.00 | | 1.00 | | 1.00 | 1.00 | | 1.00 | | 1.00 | 1.00 | | 1.00 | | 1.00 | 1.00 | | 1.00 | |
| PHF Volume: | 96 | | 0 | | 45 | 0 | | 0 | | 0 | 0 | | 194 | | 52 | 19 | | 306 | | 0 |
| Reduct Vol: | 0 | | 0 | | 0 | 0 | | 0 | | 0 | 0 | | 0 | | 0 | 0 | | 0 | | 0 |
| FinalVolume: | 96 | | 0 | | 45 | 0 | | 0 | | 0 | 0 | | 194 | | 52 | 19 | | 306 | | 0 |
| Critical Gap Module: | | | | | | | | | | | | | | | | | | | | |
| Critical Gp: | 6.4 | xxxx | | | 6.2 | xxxxx | xxxx | xxxxx | | xxxxx | xxxx | xxxxx | | | 4.1 | xxxx | xxxxx | | | |
| FollowUpTim: | 3.5 | xxxx | | | 3.3 | xxxxx | xxxx | xxxxx | | xxxxx | xxxx | xxxxx | | | 2.2 | xxxx | xxxxx | | | |
| Capacity Module: | | | | | | | | | | | | | | | | | | | | |
| Cnflict Vol: | 564 | xxxx | | | 220 | xxxx | xxxx | xxxxx | | xxxx | xxxx | xxxxx | | | 246 | xxxx | xxxxx | | | |
| Potent Cap.: | 490 | xxxx | | | 825 | xxxx | xxxx | xxxxx | | xxxx | xxxx | xxxxx | | | 1332 | xxxx | xxxxx | | | |
| Move Cap.: | 485 | xxxx | | | 825 | xxxx | xxxx | xxxxx | | xxxx | xxxx | xxxxx | | | 1332 | xxxx | xxxxx | | | |
| Volume/Cap: | 0.20 | xxxx | | | 0.05 | xxxx | xxxx | xxxx | | xxxx | xxxx | xxxx | | | 0.01 | xxxx | xxxx | | | |
| Level Of Service Module: | | | | | | | | | | | | | | | | | | | | |
| 2Way95thQ: | 0.7 | xxxx | | | 0.2 | xxxx | xxxx | xxxxx | | xxxx | xxxx | xxxxx | | | 0.0 | xxxx | xxxxx | | | |
| Control Del: | 14.2 | xxxx | | | 9.6 | xxxxx | xxxx | xxxxx | | xxxxx | xxxx | xxxxx | | | 7.7 | xxxx | xxxxx | | | |
| LOS by Move: | B | * | | | A | * | * | * | | * | * | * | | | A | * | * | | | |
| Movement: | LT | - | LTR | - | RT | LT | - | LTR | - | RT | LT | - | LTR | - | RT | LT | - | LTR | - | RT |
| Shared Cap.: | xxxx | xxxx | | | xxxxx | xxxx | xxxx | xxxxx | | xxxx | xxxx | xxxxx | | | xxxx | xxxx | xxxxx | | | |
| SharedQueue: | xxxxx | xxxx | | | xxxxx | xxxxx | xxxx | xxxxx | | xxxxx | xxxx | xxxxx | | | xxxxx | xxxx | xxxxx | | | |
| Shrd ConDel: | xxxxx | xxxx | | | xxxxx | xxxxx | xxxx | xxxxx | | xxxxx | xxxx | xxxxx | | | xxxxx | xxxx | xxxxx | | | |
| Shared LOS: | * | * | | | * | * | * | * | | * | * | * | | | * | * | * | | | |
| ApproachDel: | | | 12.8 | | | | | xxxxxx | | | | | xxxxxx | | | | | xxxxxx | | |
| ApproachLOS: | | | B | | | | | * | | | | | * | | | | | * | | |

Note: Queue reported is the number of cars per lane.

Valle Verde Home Project
Existing
AM Peak Hour

Level Of Service Computation Report
2000 HCM 4-Way Stop Method (Base Volume Alternative)

Intersection #7 Via Senda at Modoc Rd

Cycle (sec): 100 Critical Vol./Cap.(X): 0.405
Loss Time (sec): 0 (Y+R=4.0 sec) Average Delay (sec/veh): 9.6
Optimal Cycle: 0 Level Of Service: A

| Street Name: | Via Senda | | | | | | Modoc Rd | | | | | |
|---|---|---|---|---|---|---|---|---|---|---|---|---|
| Approach: | North Bound | | | South Bound | | | East Bound | | | West Bound | | |
| Movement: | L - | T - | R | L - | T - | R | L - | T - | R | L - | T - | R |
| Control: | Stop Sign | | | Stop Sign | | | Stop Sign | | | Stop Sign | | |
| Rights: | Include | | | Include | | | Include | | | Include | | |
| Min. Green: | 0 | 0 | 0 | 0 | 0 | 0 | 0 | 0 | 0 | 0 | 0 | 0 |
| Lanes: | 0 0 | 1! 0 | 0 | 0 0 | 0 0 | 0 | 0 0 | 0 1 | 0 | 0 1 | 0 0 | 0 |
| Volume Module: | | | | | | | | | | | | |
| Base Vol: | 37 | 0 | 136 | 0 | 0 | 0 | 0 | 116 | 94 | 175 | 131 | 0 |
| Growth Adj: | 1.00 | 1.00 | 1.00 | 1.00 | 1.00 | 1.00 | 1.00 | 1.00 | 1.00 | 1.00 | 1.00 | 1.00 |
| Initial Bse: | 37 | 0 | 136 | 0 | 0 | 0 | 0 | 116 | 94 | 175 | 131 | 0 |
| User Adj: | 1.00 | 1.00 | 1.00 | 1.00 | 1.00 | 1.00 | 1.00 | 1.00 | 1.00 | 1.00 | 1.00 | 1.00 |
| PHF Adj: | 1.00 | 1.00 | 1.00 | 1.00 | 1.00 | 1.00 | 1.00 | 1.00 | 1.00 | 1.00 | 1.00 | 1.00 |
| PHF Volume: | 37 | 0 | 136 | 0 | 0 | 0 | 0 | 116 | 94 | 175 | 131 | 0 |
| Reduct Vol: | 0 | 0 | 0 | 0 | 0 | 0 | 0 | 0 | 0 | 0 | 0 | 0 |
| Reduced Vol: | 37 | 0 | 136 | 0 | 0 | 0 | 0 | 116 | 94 | 175 | 131 | 0 |
| PCE Adj: | 1.00 | 1.00 | 1.00 | 1.00 | 1.00 | 1.00 | 1.00 | 1.00 | 1.00 | 1.00 | 1.00 | 1.00 |
| MLF Adj: | 1.00 | 1.00 | 1.00 | 1.00 | 1.00 | 1.00 | 1.00 | 1.00 | 1.00 | 1.00 | 1.00 | 1.00 |
| FinalVolume: | 37 | 0 | 136 | 0 | 0 | 0 | 0 | 116 | 94 | 175 | 131 | 0 |
| Saturation Flow Module: | | | | | | | | | | | | |
| Adjustment: | 1.00 | 1.00 | 1.00 | 1.00 | 1.00 | 1.00 | 1.00 | 1.00 | 1.00 | 1.00 | 1.00 | 1.00 |
| Lanes: | 0.21 | 0.00 | 0.79 | 0.00 | 0.00 | 0.00 | 0.00 | 0.55 | 0.45 | 0.57 | 0.43 | 0.00 |
| Final Sat.: | 156 | 0 | 574 | 0 | 0 | 0 | 0 | 437 | 354 | 432 | 324 | 0 |
| Capacity Analysis Module: | | | | | | | | | | | | |
| Vol/Sat: | 0.24 | xxxx | 0.24 | xxxx | xxxx | xxxx | xxxx | 0.27 | 0.27 | 0.40 | 0.40 | xxxx |
| Crit Moves: | **** | | | | | | | **** | | **** | | |
| Delay/Veh: | 8.8 | 0.0 | 8.8 | 0.0 | 0.0 | 0.0 | 0.0 | 8.9 | 8.9 | 10.6 | 10.6 | 0.0 |
| Delay Adj: | 1.00 | 1.00 | 1.00 | 1.00 | 1.00 | 1.00 | 1.00 | 1.00 | 1.00 | 1.00 | 1.00 | 1.00 |
| AdjDel/Veh: | 8.8 | 0.0 | 8.8 | 0.0 | 0.0 | 0.0 | 0.0 | 8.9 | 8.9 | 10.6 | 10.6 | 0.0 |
| LOS by Move: | A | * | A | * | * | * | * | A | A | B | B | * |
| ApproachDel: | 8.8 | | | xxxxxx | | | | 8.9 | | 10.6 | | |
| Delay Adj: | 1.00 | | | xxxxx | | | | 1.00 | | 1.00 | | |
| ApprAdjDel: | 8.8 | | | xxxxxx | | | | 8.9 | | 10.6 | | |
| LOS by Appr: | A | | | * | | | | A | | B | | |
| AllWayAvgQ: | 0.3 | 0.3 | 0.3 | 0.0 | 0.0 | 0.0 | 0.3 | 0.3 | 0.3 | 0.6 | 0.6 | 0.6 |

Note: Queue reported is the number of cars per lane.

Valle Verde Home Project
Existing
AM Peak Hour

Level Of Service Computation Report
2000 HCM 4-Way Stop Method (Base Volume Alternative)

Intersection #8 Via Senda at Las Palmas Dr

Cycle (sec): 100 Critical Vol./Cap.(X): 0.540
Loss Time (sec): 0 (Y+R=4.0 sec) Average Delay (sec/veh): 12.9
Optimal Cycle: 0 Level Of Service: B

| Street Name: | Via Senda | | | | | | Las Palmas Dr | | | | | |
|---|---|---|---|---|---|---|---|---|---|---|---|---|
| Approach: | North Bound | | | South Bound | | | East Bound | | | West Bound | | |
| Movement: | L - | T - | R | L - | T - | R | L - | T - | R | L - | T - | R |
| Control: | Stop Sign | | | Stop Sign | | | Stop Sign | | | Stop Sign | | |
| Rights: | Include | | | Include | | | Include | | | Include | | |
| Min. Green: | 0 | 0 | 0 | 0 | 0 | 0 | 0 | 0 | 0 | 0 | 0 | 0 |
| Lanes: | 0 0 | 0 0 | 0 | 0 0 | 1! 0 | 0 | 0 1 | 0 0 | 0 | 0 0 | 1 0 | 1 |
| Volume Module: | | | | | | | | | | | | |
| Base Vol: | 0 | 0 | 0 | 237 | 0 | 34 | 26 | 283 | 0 | 0 | 337 | 146 |
| Growth Adj: | 1.00 | 1.00 | 1.00 | 1.00 | 1.00 | 1.00 | 1.00 | 1.00 | 1.00 | 1.00 | 1.00 | 1.00 |
| Initial Bse: | 0 | 0 | 0 | 237 | 0 | 34 | 26 | 283 | 0 | 0 | 337 | 146 |
| User Adj: | 1.00 | 1.00 | 1.00 | 1.00 | 1.00 | 1.00 | 1.00 | 1.00 | 1.00 | 1.00 | 1.00 | 1.00 |
| PHF Adj: | 1.00 | 1.00 | 1.00 | 1.00 | 1.00 | 1.00 | 1.00 | 1.00 | 1.00 | 1.00 | 1.00 | 1.00 |
| PHF Volume: | 0 | 0 | 0 | 237 | 0 | 34 | 26 | 283 | 0 | 0 | 337 | 146 |
| Reduct Vol: | 0 | 0 | 0 | 0 | 0 | 0 | 0 | 0 | 0 | 0 | 0 | 0 |
| Reduced Vol: | 0 | 0 | 0 | 237 | 0 | 34 | 26 | 283 | 0 | 0 | 337 | 146 |
| PCE Adj: | 1.00 | 1.00 | 1.00 | 1.00 | 1.00 | 1.00 | 1.00 | 1.00 | 1.00 | 1.00 | 1.00 | 1.00 |
| MLF Adj: | 1.00 | 1.00 | 1.00 | 1.00 | 1.00 | 1.00 | 1.00 | 1.00 | 1.00 | 1.00 | 1.00 | 1.00 |
| FinalVolume: | 0 | 0 | 0 | 237 | 0 | 34 | 26 | 283 | 0 | 0 | 337 | 146 |
| Saturation Flow Module: | | | | | | | | | | | | |
| Adjustment: | 1.00 | 1.00 | 1.00 | 1.00 | 1.00 | 1.00 | 1.00 | 1.00 | 1.00 | 1.00 | 1.00 | 1.00 |
| Lanes: | 0.00 | 0.00 | 0.00 | 0.87 | 0.00 | 0.13 | 0.08 | 0.92 | 0.00 | 0.00 | 1.00 | 1.00 |
| Final Sat.: | 0 | 0 | 0 | 521 | 0 | 75 | 55 | 594 | 0 | 0 | 624 | 710 |
| Capacity Analysis Module: | | | | | | | | | | | | |
| Vol/Sat: | xxxx | xxxx | xxxx | 0.46 | xxxx | 0.46 | 0.48 | 0.48 | xxxx | xxxx | 0.54 | 0.21 |
| Crit Moves: | | | | **** | | | | **** | | | **** | |
| Delay/Veh: | 0.0 | 0.0 | 0.0 | 13.0 | 0.0 | 13.0 | 12.9 | 12.9 | 0.0 | 0.0 | 14.5 | 8.9 |
| Delay Adj: | 1.00 | 1.00 | 1.00 | 1.00 | 1.00 | 1.00 | 1.00 | 1.00 | 1.00 | 1.00 | 1.00 | 1.00 |
| AdjDel/Veh: | 0.0 | 0.0 | 0.0 | 13.0 | 0.0 | 13.0 | 12.9 | 12.9 | 0.0 | 0.0 | 14.5 | 8.9 |
| LOS by Move: | * | * | * | B | * | B | B | B | * | * | B | A |
| ApproachDel: | xxxxxx | | | 13.0 | | | 12.9 | | | 12.8 | | |
| Delay Adj: | xxxxx | | | 1.00 | | | 1.00 | | | 1.00 | | |
| ApprAdjDel: | xxxxxx | | | 13.0 | | | 12.9 | | | 12.8 | | |
| LOS by Appr: | * | | | B | | | B | | | B | | |
| AllWayAvgQ: | 0.0 | 0.0 | 0.0 | 0.7 | 0.7 | 0.7 | 0.8 | 0.8 | 0.8 | 0.0 | 1.1 | 0.2 |

Note: Queue reported is the number of cars per lane.

Valle Verde Home Project
Existing
AM Peak Hour

Level Of Service Computation Report
2000 HCM Operations Method (Base Volume Alternative)

Intersection #9 Las Palmas/S La Cumbre Rd at US-101 SB Ramps

| | | | |
|---|---|---|---|
| Cycle (sec): | 100 | Critical Vol./Cap.(X): | 0.534 |
| Loss Time (sec): | 10 (Y+R=4.0 sec) | Average Delay (sec/veh): | 26.1 |
| Optimal Cycle: | 39 | Level Of Service: | C |

| Approach: | North Bound | | | South Bound | | | East Bound | | | West Bound | | |
|---|---|---|---|---|---|---|---|---|---|---|---|---|
| Movement: | L - | T - | R | L - | T - | R | L - | T - | R | L - | T - | R |
| Control: | Protected | | | Protected | | | Protected | | | Protected | | |
| Rights: | Include | | | Include | | | Include | | | Include | | |
| Min. Green: | 0 | 0 | 0 | 0 | 0 | 0 | 0 | 0 | 0 | 0 | 0 | 0 |
| Lanes: | 0 0 | 2 0 | 1 | 2 0 | 1 0 | 0 | 1 1 | 0 0 | 1 | 0 0 | 0 0 | 0 |
| Volume Module: | | | | | | | | | | | | |
| Base Vol: | 0 | 422 | 239 | 449 | 385 | 0 | 458 | 5 | 110 | 0 | 0 | 0 |
| Growth Adj: | 1.00 | 1.00 | 1.00 | 1.00 | 1.00 | 1.00 | 1.00 | 1.00 | 1.00 | 1.00 | 1.00 | 1.00 |
| Initial Bse: | 0 | 422 | 239 | 449 | 385 | 0 | 458 | 5 | 110 | 0 | 0 | 0 |
| User Adj: | 1.00 | 1.00 | 1.00 | 1.00 | 1.00 | 1.00 | 1.00 | 1.00 | 1.00 | 1.00 | 1.00 | 1.00 |
| PHF Adj: | 1.00 | 1.00 | 1.00 | 1.00 | 1.00 | 1.00 | 1.00 | 1.00 | 1.00 | 1.00 | 1.00 | 1.00 |
| PHF Volume: | 0 | 422 | 239 | 449 | 385 | 0 | 458 | 5 | 110 | 0 | 0 | 0 |
| Reduct Vol: | 0 | 0 | 0 | 0 | 0 | 0 | 0 | 0 | 0 | 0 | 0 | 0 |
| Reduced Vol: | 0 | 422 | 239 | 449 | 385 | 0 | 458 | 5 | 110 | 0 | 0 | 0 |
| PCE Adj: | 1.00 | 1.00 | 1.00 | 1.00 | 1.00 | 1.00 | 1.00 | 1.00 | 1.00 | 1.00 | 1.00 | 1.00 |
| MLF Adj: | 1.00 | 1.00 | 1.00 | 1.00 | 1.00 | 1.00 | 1.00 | 1.00 | 1.00 | 1.00 | 1.00 | 1.00 |
| FinalVolume: | 0 | 422 | 239 | 449 | 385 | 0 | 458 | 5 | 110 | 0 | 0 | 0 |
| Saturation Flow Module: | | | | | | | | | | | | |
| Sat/Lane: | 1900 | 1900 | 1900 | 1900 | 1900 | 1900 | 1900 | 1900 | 1900 | 1900 | 1900 | 1900 |
| Adjustment: | 1.00 | 0.95 | 0.85 | 0.74 | 1.00 | 1.00 | 0.70 | 0.88 | 0.85 | 1.00 | 1.00 | 1.00 |
| Lanes: | 0.00 | 2.00 | 1.00 | 2.00 | 1.00 | 0.00 | 1.98 | 0.02 | 1.00 | 0.00 | 0.00 | 0.00 |
| Final Sat.: | 0 | 3610 | 1615 | 2801 | 1900 | 0 | 2652 | 29 | 1615 | 0 | 0 | 0 |
| Capacity Analysis Module: | | | | | | | | | | | | |
| Vol/Sat: | 0.00 | 0.12 | 0.15 | 0.16 | 0.20 | 0.00 | 0.17 | 0.17 | 0.07 | 0.00 | 0.00 | 0.00 |
| Crit Moves: | | | **** | **** | | | **** | | | | | |
| Green/Cycle: | 0.00 | 0.28 | 0.28 | 0.30 | 0.58 | 0.00 | 0.32 | 0.32 | 0.32 | 0.00 | 0.00 | 0.00 |
| Volume/Cap: | 0.00 | 0.42 | 0.53 | 0.53 | 0.35 | 0.00 | 0.53 | 0.53 | 0.21 | 0.00 | 0.00 | 0.00 |
| Delay/Veh: | 0.0 | 29.9 | 31.9 | 29.9 | 11.4 | 0.0 | 28.3 | 28.3 | 24.8 | 0.0 | 0.0 | 0.0 |
| User DelAdj: | 1.00 | 1.00 | 1.00 | 1.00 | 1.00 | 1.00 | 1.00 | 1.00 | 1.00 | 1.00 | 1.00 | 1.00 |
| AdjDel/Veh: | 0.0 | 29.9 | 31.9 | 29.9 | 11.4 | 0.0 | 28.3 | 28.3 | 24.8 | 0.0 | 0.0 | 0.0 |
| LOS by Move: | A | C | C | C | B | A | C | C | C | A | A | A |
| HCM2kAvgQ: | 0 | 6 | 7 | 6 | 6 | 0 | 6 | 8 | 2 | 0 | 0 | 0 |

Note: Queue reported is the number of cars per lane.

# EXISTING CONDITIONS
# LOS WORKSHEETS

# WEEKDAY PM PEAK HOUR

Valle Verde Home Project
Existing
PM Peak Hour

Scenario Report

| | |
|---|---|
| Scenario: | Existing PM |
| Command: | Existing PM |
| Volume: | Existing PM |
| Geometry: | Existing |
| Impact Fee: | Default Impact Fee |
| Trip Generation: | none |
| Trip Distribution: | none |
| Paths: | Default Path |
| Routes: | Default Route |
| Configuration: | Existing PM |

Valle Verde Home Project
Existing
PM Peak Hour

Turning Movement Report
none

| Volume | Northbound | | | Southbound | | | Eastbound | | | Westbound | | | Total |
|---|---|---|---|---|---|---|---|---|---|---|---|---|---|
| Type | Left | Thru | Right | Left | Thru | Right | Left | Thru | Right | Left | Thru | Right | Volume |
| #6 Calle de los Amigos at Modoc Rd | | | | | | | | | | | | | |
| Base | 70 | 0 | 35 | 0 | 0 | 0 | 0 | 328 | 109 | 48 | 275 | 0 | 865 |
| Added | 0 | 0 | 0 | 0 | 0 | 0 | 0 | 0 | 0 | 0 | 0 | 0 | 0 |
| Total | 70 | 0 | 35 | 0 | 0 | 0 | 0 | 328 | 109 | 48 | 275 | 0 | 865 |
| #7 Via Senda at Modoc Rd | | | | | | | | | | | | | |
| Base | 98 | 0 | 206 | 0 | 0 | 0 | 0 | 188 | 70 | 177 | 179 | 0 | 918 |
| Added | 0 | 0 | 0 | 0 | 0 | 0 | 0 | 0 | 0 | 0 | 0 | 0 | 0 |
| Total | 98 | 0 | 206 | 0 | 0 | 0 | 0 | 188 | 70 | 177 | 179 | 0 | 918 |
| #8 Via Senda at Las Palmas Dr | | | | | | | | | | | | | |
| Base | 0 | 0 | 0 | 226 | 0 | 27 | 27 | 274 | 0 | 0 | 271 | 270 | 1095 |
| Added | 0 | 0 | 0 | 0 | 0 | 0 | 0 | 0 | 0 | 0 | 0 | 0 | 0 |
| Total | 0 | 0 | 0 | 226 | 0 | 27 | 27 | 274 | 0 | 0 | 271 | 270 | 1095 |
| #9 Las Palmas/S La Cumbre Rd at US-101 SB Ramps | | | | | | | | | | | | | |
| Base | 0 | 314 | 144 | 599 | 385 | 0 | 604 | 1 | 75 | 0 | 0 | 0 | 2122 |
| Added | 0 | 0 | 0 | 0 | 0 | 0 | 0 | 0 | 0 | 0 | 0 | 0 | 0 |
| Total | 0 | 314 | 144 | 599 | 385 | 0 | 604 | 1 | 75 | 0 | 0 | 0 | 2122 |

Valle Verde Home Project
Existing
PM Peak Hour

Impact Analysis Report
Level Of Service

| Intersection | Base LOS | Base Del/ Veh | Base V/ C | Future LOS | Future Del/ Veh | Future V/ C | Change in |
|---|---|---|---|---|---|---|---|
| # 6 Calle de los Amigos at Modoc R | B | 14.9 | 0.000 | B | 14.9 | 0.000 | + 0.000 D/V |
| # 7 Via Senda at Modoc Rd | B | 11.9 | 0.522 | B | 11.9 | 0.522 | + 0.000 V/C |
| # 8 Via Senda at Las Palmas Dr | B | 11.9 | 0.460 | B | 11.9 | 0.460 | + 0.000 V/C |
| # 9 Las Palmas/S La Cumbre Rd at | B | xxxxx | 0.668 | B | xxxxx | 0.668 | + 0.000 V/C |

Traffix 7.9.0215 (c) 2008 Dowling Assoc. Licensed to MMA, LONG BEACH, CA

Valle Verde Home Project
Existing
PM Peak Hour

Level Of Service Computation Report
2000 HCM Unsignalized Method (Base Volume Alternative)

Intersection #6 Calle de los Amigos at Modoc Rd

Average Delay (sec/veh): 2.3 Worst Case Level Of Service: B[ 14.9]

| Street Name: | Calle de los Amigos | | | | | | Modoc Rd | | | | | |
|---|---|---|---|---|---|---|---|---|---|---|---|---|
| Approach: | North Bound | | | South Bound | | | East Bound | | | West Bound | | |
| Movement: | L - T - R | | | L - T - R | | | L - T - R | | | L - T - R | | |
| Control: | Stop Sign | | | Stop Sign | | | Uncontrolled | | | Uncontrolled | | |
| Rights: | Include | | | Include | | | Include | | | Include | | |
| Lanes: | 1 0 0 0 1 | | | 0 0 0 0 0 | | | 0 0 0 1 0 | | | 1 0 1 0 0 | | |
| Volume Module: | | | | | | | | | | | | |
| Base Vol: | 70 | 0 | 35 | 0 | 0 | 0 | 0 | 328 | 109 | 48 | 275 | 0 |
| Growth Adj: | 1.00 | 1.00 | 1.00 | 1.00 | 1.00 | 1.00 | 1.00 | 1.00 | 1.00 | 1.00 | 1.00 | 1.00 |
| Initial Bse: | 70 | 0 | 35 | 0 | 0 | 0 | 0 | 328 | 109 | 48 | 275 | 0 |
| User Adj: | 1.00 | 1.00 | 1.00 | 1.00 | 1.00 | 1.00 | 1.00 | 1.00 | 1.00 | 1.00 | 1.00 | 1.00 |
| PHF Adj: | 1.00 | 1.00 | 1.00 | 1.00 | 1.00 | 1.00 | 1.00 | 1.00 | 1.00 | 1.00 | 1.00 | 1.00 |
| PHF Volume: | 70 | 0 | 35 | 0 | 0 | 0 | 0 | 328 | 109 | 48 | 275 | 0 |
| Reduct Vol: | 0 | 0 | 0 | 0 | 0 | 0 | 0 | 0 | 0 | 0 | 0 | 0 |
| FinalVolume: | 70 | 0 | 35 | 0 | 0 | 0 | 0 | 328 | 109 | 48 | 275 | 0 |
| Critical Gap Module: | | | | | | | | | | | | |
| Critical Gp: | 6.4 | xxxx | 6.2 | xxxxx | xxxx | xxxxx | xxxxx | xxxx | xxxxx | 4.1 | xxxx | xxxxx |
| FollowUpTim: | 3.5 | xxxx | 3.3 | xxxxx | xxxx | xxxxx | xxxxx | xxxx | xxxxx | 2.2 | xxxx | xxxxx |
| Capacity Module: | | | | | | | | | | | | |
| Cnflict Vol: | 754 | xxxx | 383 | xxxx | xxxx | xxxxx | xxxx | xxxx | xxxxx | 437 | xxxx | xxxxx |
| Potent Cap.: | 380 | xxxx | 669 | xxxx | xxxx | xxxxx | xxxx | xxxx | xxxxx | 1134 | xxxx | xxxxx |
| Move Cap.: | 368 | xxxx | 669 | xxxx | xxxx | xxxxx | xxxx | xxxx | xxxxx | 1134 | xxxx | xxxxx |
| Volume/Cap: | 0.19 | xxxx | 0.05 | xxxx | xxxx | xxxx | xxxx | xxxx | xxxx | 0.04 | xxxx | xxxx |
| Level Of Service Module: | | | | | | | | | | | | |
| 2Way95thQ: | 0.7 | xxxx | 0.2 | xxxx | xxxx | xxxxx | xxxx | xxxx | xxxxx | 0.1 | xxxx | xxxxx |
| Control Del: | 17.1 | xxxx | 10.7 | xxxxx | xxxx | xxxxx | xxxxx | xxxx | xxxxx | 8.3 | xxxx | xxxxx |
| LOS by Move: | C | * | B | * | * | * | * | * | * | A | * | * |
| Movement: | LT - LTR - RT | | | LT - LTR - RT | | | LT - LTR - RT | | | LT - LTR - RT | | |
| Shared Cap.: | xxxx | xxxx | xxxxx | xxxx | xxxx | xxxxx | xxxx | xxxx | xxxxx | xxxx | xxxx | xxxxx |
| SharedQueue: | xxxxx | xxxx | xxxxx | xxxxx | xxxx | xxxxx | xxxxx | xxxx | xxxxx | xxxxx | xxxx | xxxxx |
| Shrd ConDel: | xxxxx | xxxx | xxxxx | xxxxx | xxxx | xxxxx | xxxxx | xxxx | xxxxx | xxxxx | xxxx | xxxxx |
| Shared LOS: | * | * | * | * | * | * | * | * | * | * | * | * |
| ApproachDel: | 14.9 | | | xxxxxx | | | xxxxxx | | | xxxxxx | | |
| ApproachLOS: | B | | | * | | | * | | | * | | |

Note: Queue reported is the number of cars per lane.

Valle Verde Home Project
Existing
PM Peak Hour

Level Of Service Computation Report
2000 HCM 4-Way Stop Method (Base Volume Alternative)

Intersection #7 Via Senda at Modoc Rd

Cycle (sec): 100 Critical Vol./Cap.(X): 0.522
Loss Time (sec): 0 (Y+R=4.0 sec) Average Delay (sec/veh): 11.9
Optimal Cycle: 0 Level Of Service: B

| Street Name: | Via Senda | | | | | | Modoc Rd | | | | | |
|---|---|---|---|---|---|---|---|---|---|---|---|---|
| Approach: | North Bound | | | South Bound | | | East Bound | | | West Bound | | |
| Movement: | L - | T - | R | L - | T - | R | L - | T - | R | L - | T - | R |
| Control: | Stop Sign | | | Stop Sign | | | Stop Sign | | | Stop Sign | | |
| Rights: | Include | | | Include | | | Include | | | Include | | |
| Min. Green: | 0 | 0 | 0 | 0 | 0 | 0 | 0 | 0 | 0 | 0 | 0 | 0 |
| Lanes: | 0 0 | 1! 0 | 0 | 0 0 | 0 0 | 0 | 0 0 | 0 1 | 0 | 0 1 | 0 0 | 0 |
| Volume Module: | | | | | | | | | | | | |
| Base Vol: | 98 | 0 | 206 | 0 | 0 | 0 | 0 | 188 | 70 | 177 | 179 | 0 |
| Growth Adj: | 1.00 | 1.00 | 1.00 | 1.00 | 1.00 | 1.00 | 1.00 | 1.00 | 1.00 | 1.00 | 1.00 | 1.00 |
| Initial Bse: | 98 | 0 | 206 | 0 | 0 | 0 | 0 | 188 | 70 | 177 | 179 | 0 |
| User Adj: | 1.00 | 1.00 | 1.00 | 1.00 | 1.00 | 1.00 | 1.00 | 1.00 | 1.00 | 1.00 | 1.00 | 1.00 |
| PHF Adj: | 1.00 | 1.00 | 1.00 | 1.00 | 1.00 | 1.00 | 1.00 | 1.00 | 1.00 | 1.00 | 1.00 | 1.00 |
| PHF Volume: | 98 | 0 | 206 | 0 | 0 | 0 | 0 | 188 | 70 | 177 | 179 | 0 |
| Reduct Vol: | 0 | 0 | 0 | 0 | 0 | 0 | 0 | 0 | 0 | 0 | 0 | 0 |
| Reduced Vol: | 98 | 0 | 206 | 0 | 0 | 0 | 0 | 188 | 70 | 177 | 179 | 0 |
| PCE Adj: | 1.00 | 1.00 | 1.00 | 1.00 | 1.00 | 1.00 | 1.00 | 1.00 | 1.00 | 1.00 | 1.00 | 1.00 |
| MLF Adj: | 1.00 | 1.00 | 1.00 | 1.00 | 1.00 | 1.00 | 1.00 | 1.00 | 1.00 | 1.00 | 1.00 | 1.00 |
| FinalVolume: | 98 | 0 | 206 | 0 | 0 | 0 | 0 | 188 | 70 | 177 | 179 | 0 |
| Saturation Flow Module: | | | | | | | | | | | | |
| Adjustment: | 1.00 | 1.00 | 1.00 | 1.00 | 1.00 | 1.00 | 1.00 | 1.00 | 1.00 | 1.00 | 1.00 | 1.00 |
| Lanes: | 0.32 | 0.00 | 0.68 | 0.00 | 0.00 | 0.00 | 0.00 | 0.73 | 0.27 | 0.50 | 0.50 | 0.00 |
| Final Sat.: | 219 | 0 | 461 | 0 | 0 | 0 | 0 | 502 | 187 | 339 | 343 | 0 |
| Capacity Analysis Module: | | | | | | | | | | | | |
| Vol/Sat: | 0.45 | xxxx | 0.45 | xxxx | xxxx | xxxx | xxxx | 0.37 | 0.37 | 0.52 | 0.52 | xxxx |
| Crit Moves: | **** | | | | | | | **** | | **** | | |
| Delay/Veh: | 11.5 | 0.0 | 11.5 | 0.0 | 0.0 | 0.0 | 0.0 | 10.7 | 10.7 | 13.2 | 13.2 | 0.0 |
| Delay Adj: | 1.00 | 1.00 | 1.00 | 1.00 | 1.00 | 1.00 | 1.00 | 1.00 | 1.00 | 1.00 | 1.00 | 1.00 |
| AdjDel/Veh: | 11.5 | 0.0 | 11.5 | 0.0 | 0.0 | 0.0 | 0.0 | 10.7 | 10.7 | 13.2 | 13.2 | 0.0 |
| LOS by Move: | B | * | B | * | * | * | * | B | B | B | B | * |
| ApproachDel: | 11.5 | | | xxxxxx | | | 10.7 | | | 13.2 | | |
| Delay Adj: | 1.00 | | | xxxxx | | | 1.00 | | | 1.00 | | |
| ApprAdjDel: | 11.5 | | | xxxxxx | | | 10.7 | | | 13.2 | | |
| LOS by Appr: | B | | | * | | | B | | | B | | |
| AllWayAvgQ: | 0.7 | 0.7 | 0.7 | 0.0 | 0.0 | 0.0 | 0.5 | 0.5 | 0.5 | 1.0 | 1.0 | 1.0 |

Note: Queue reported is the number of cars per lane.

Valle Verde Home Project
Existing
PM Peak Hour

Level Of Service Computation Report
2000 HCM 4-Way Stop Method (Base Volume Alternative)

Intersection #8 Via Senda at Las Palmas Dr

Cycle (sec): 100 Critical Vol./Cap.(X): 0.460
Loss Time (sec): 0 (Y+R=4.0 sec) Average Delay (sec/veh): 11.9
Optimal Cycle: 0 Level Of Service: B

| Street Name: | Via Senda | | | | | | Las Palmas Dr | | | | | |
|---|---|---|---|---|---|---|---|---|---|---|---|---|
| Approach: | North Bound | | | South Bound | | | East Bound | | | West Bound | | |
| Movement: | L - | T - | R | L - | T - | R | L - | T - | R | L - | T - | R |
| Control: | Stop Sign | | | Stop Sign | | | Stop Sign | | | Stop Sign | | |
| Rights: | Include | | | Include | | | Include | | | Include | | |
| Min. Green: | 0 | 0 | 0 | 0 | 0 | 0 | 0 | 0 | 0 | 0 | 0 | 0 |
| Lanes: | 0 0 | 0 0 | 0 | 0 0 | 1! 0 | 0 | 0 1 | 0 0 | 0 | 0 0 | 1 0 | 1 |
| Volume Module: | | | | | | | | | | | | |
| Base Vol: | 0 | 0 | 0 | 226 | 0 | 27 | 27 | 274 | 0 | 0 | 271 | 270 |
| Growth Adj: | 1.00 | 1.00 | 1.00 | 1.00 | 1.00 | 1.00 | 1.00 | 1.00 | 1.00 | 1.00 | 1.00 | 1.00 |
| Initial Bse: | 0 | 0 | 0 | 226 | 0 | 27 | 27 | 274 | 0 | 0 | 271 | 270 |
| User Adj: | 1.00 | 1.00 | 1.00 | 1.00 | 1.00 | 1.00 | 1.00 | 1.00 | 1.00 | 1.00 | 1.00 | 1.00 |
| PHF Adj: | 1.00 | 1.00 | 1.00 | 1.00 | 1.00 | 1.00 | 1.00 | 1.00 | 1.00 | 1.00 | 1.00 | 1.00 |
| PHF Volume: | 0 | 0 | 0 | 226 | 0 | 27 | 27 | 274 | 0 | 0 | 271 | 270 |
| Reduct Vol: | 0 | 0 | 0 | 0 | 0 | 0 | 0 | 0 | 0 | 0 | 0 | 0 |
| Reduced Vol: | 0 | 0 | 0 | 226 | 0 | 27 | 27 | 274 | 0 | 0 | 271 | 270 |
| PCE Adj: | 1.00 | 1.00 | 1.00 | 1.00 | 1.00 | 1.00 | 1.00 | 1.00 | 1.00 | 1.00 | 1.00 | 1.00 |
| MLF Adj: | 1.00 | 1.00 | 1.00 | 1.00 | 1.00 | 1.00 | 1.00 | 1.00 | 1.00 | 1.00 | 1.00 | 1.00 |
| FinalVolume: | 0 | 0 | 0 | 226 | 0 | 27 | 27 | 274 | 0 | 0 | 271 | 270 |
| Saturation Flow Module: | | | | | | | | | | | | |
| Adjustment: | 1.00 | 1.00 | 1.00 | 1.00 | 1.00 | 1.00 | 1.00 | 1.00 | 1.00 | 1.00 | 1.00 | 1.00 |
| Lanes: | 0.00 | 0.00 | 0.00 | 0.89 | 0.00 | 0.11 | 0.09 | 0.91 | 0.00 | 0.00 | 1.00 | 1.00 |
| Final Sat.: | 0 | 0 | 0 | 531 | 0 | 63 | 59 | 596 | 0 | 0 | 633 | 722 |
| Capacity Analysis Module: | | | | | | | | | | | | |
| Vol/Sat: | xxxx | xxxx | xxxx | 0.43 | xxxx | 0.43 | 0.46 | 0.46 | xxxx | xxxx | 0.43 | 0.37 |
| Crit Moves: | | | | | | **** | | **** | | | **** | |
| Delay/Veh: | 0.0 | 0.0 | 0.0 | 12.6 | 0.0 | 12.6 | 12.6 | 12.6 | 0.0 | 0.0 | 12.2 | 10.4 |
| Delay Adj: | 1.00 | 1.00 | 1.00 | 1.00 | 1.00 | 1.00 | 1.00 | 1.00 | 1.00 | 1.00 | 1.00 | 1.00 |
| AdjDel/Veh: | 0.0 | 0.0 | 0.0 | 12.6 | 0.0 | 12.6 | 12.6 | 12.6 | 0.0 | 0.0 | 12.2 | 10.4 |
| LOS by Move: | * | * | * | B | * | B | B | B | * | * | B | B |
| ApproachDel: | xxxxxx | | | 12.6 | | | 12.6 | | | 11.3 | | |
| Delay Adj: | xxxxx | | | 1.00 | | | 1.00 | | | 1.00 | | |
| ApprAdjDel: | xxxxxx | | | 12.6 | | | 12.6 | | | 11.3 | | |
| LOS by Appr: | * | | | B | | | B | | | B | | |
| AllWayAvgQ: | 0.0 | 0.0 | 0.0 | 0.6 | 0.6 | 0.6 | 0.8 | 0.8 | 0.8 | 0.0 | 0.7 | 0.6 |

Note: Queue reported is the number of cars per lane.

Valle Verde Home Project
Existing
PM Peak Hour

Level Of Service Computation Report
ICU 1(Loss as Cycle Length %) Method (Base Volume Alternative)

Intersection #9 Las Palmas/S La Cumbre Rd at US-101 SB Ramps

| | | | |
|---|---|---|---|
| Cycle (sec): | 100 | Critical Vol./Cap.(X): | 0.668 |
| Loss Time (sec): | 10 (Y+R=4.0 sec) | Average Delay (sec/veh): | xxxxxx |
| Optimal Cycle: | 46 | Level Of Service: | B |

| Approach: | North Bound | | | South Bound | | | East Bound | | | West Bound | | |
|---|---|---|---|---|---|---|---|---|---|---|---|---|
| Movement: | L - | T - | R | L - | T - | R | L - | T - | R | L - | T - | R |
| Control: | Protected | | | Protected | | | Protected | | | Protected | | |
| Rights: | Include | | | Include | | | Include | | | Include | | |
| Min. Green: | 0 | 0 | 0 | 0 | 0 | 0 | 0 | 0 | 0 | 0 | 0 | 0 |
| Lanes: | 0 0 | 2 0 | 1 | 2 0 | 1 0 | 0 | 1 1 | 0 0 | 1 | 0 0 | 0 0 | 0 |
| Volume Module: | | | | | | | | | | | | |
| Base Vol: | 0 | 314 | 144 | 599 | 385 | 0 | 604 | 1 | 75 | 0 | 0 | 0 |
| Growth Adj: | 1.00 | 1.00 | 1.00 | 1.00 | 1.00 | 1.00 | 1.00 | 1.00 | 1.00 | 1.00 | 1.00 | 1.00 |
| Initial Bse: | 0 | 314 | 144 | 599 | 385 | 0 | 604 | 1 | 75 | 0 | 0 | 0 |
| User Adj: | 1.00 | 1.00 | 1.00 | 1.00 | 1.00 | 1.00 | 1.00 | 1.00 | 1.00 | 1.00 | 1.00 | 1.00 |
| PHF Adj: | 1.00 | 1.00 | 1.00 | 1.00 | 1.00 | 1.00 | 1.00 | 1.00 | 1.00 | 1.00 | 1.00 | 1.00 |
| PHF Volume: | 0 | 314 | 144 | 599 | 385 | 0 | 604 | 1 | 75 | 0 | 0 | 0 |
| Reduct Vol: | 0 | 0 | 0 | 0 | 0 | 0 | 0 | 0 | 0 | 0 | 0 | 0 |
| Reduced Vol: | 0 | 314 | 144 | 599 | 385 | 0 | 604 | 1 | 75 | 0 | 0 | 0 |
| PCE Adj: | 1.00 | 1.00 | 1.00 | 1.00 | 1.00 | 1.00 | 1.00 | 1.00 | 1.00 | 1.00 | 1.00 | 1.00 |
| MLF Adj: | 1.00 | 1.00 | 1.00 | 1.00 | 1.00 | 1.00 | 1.00 | 1.00 | 1.00 | 1.00 | 1.00 | 1.00 |
| FinalVolume: | 0 | 314 | 144 | 599 | 385 | 0 | 604 | 1 | 75 | 0 | 0 | 0 |
| Saturation Flow Module: | | | | | | | | | | | | |
| Sat/Lane: | 1600 | 1600 | 1600 | 1600 | 1600 | 1600 | 1600 | 1600 | 1600 | 1600 | 1600 | 1600 |
| Adjustment: | 1.00 | 1.00 | 1.00 | 0.80 | 1.00 | 1.00 | 0.80 | 1.00 | 1.00 | 1.00 | 1.00 | 1.00 |
| Lanes: | 0.00 | 2.00 | 1.00 | 2.00 | 1.00 | 0.00 | 1.99 | 0.01 | 1.00 | 0.00 | 0.00 | 0.00 |
| Final Sat.: | 0 | 3200 | 1600 | 2560 | 1600 | 0 | 2556 | 5 | 1600 | 0 | 0 | 0 |
| Capacity Analysis Module: | | | | | | | | | | | | |
| Vol/Sat: | 0.00 | 0.10 | 0.09 | 0.23 | 0.24 | 0.00 | 0.24 | 0.19 | 0.05 | 0.00 | 0.00 | 0.00 |
| Crit Moves: | | **** | | **** | | | **** | | | | | |

Valle Verde Home Project
Existing
PM Peak Hour

Scenario Report

| | |
|---|---|
| Scenario: | Existing PM |
| Command: | Existing PM |
| Volume: | Existing PM |
| Geometry: | Existing |
| Impact Fee: | Default Impact Fee |
| Trip Generation: | none |
| Trip Distribution: | none |
| Paths: | Default Path |
| Routes: | Default Route |
| Configuration: | Existing PM |

Valle Verde Home Project
Existing
PM Peak Hour

Turning Movement Report
none

| Volume | Northbound | | | Southbound | | | Eastbound | | | Westbound | | | Total |
|---|---|---|---|---|---|---|---|---|---|---|---|---|---|
| Type | Left | Thru | Right | Left | Thru | Right | Left | Thru | Right | Left | Thru | Right | Volume |
| #6 Calle de los Amigos at Modoc Rd | | | | | | | | | | | | | |
| Base | 70 | 0 | 35 | 0 | 0 | 0 | 0 | 328 | 109 | 48 | 275 | 0 | 865 |
| Added | 0 | 0 | 0 | 0 | 0 | 0 | 0 | 0 | 0 | 0 | 0 | 0 | 0 |
| Total | 70 | 0 | 35 | 0 | 0 | 0 | 0 | 328 | 109 | 48 | 275 | 0 | 865 |
| #7 Via Senda at Modoc Rd | | | | | | | | | | | | | |
| Base | 98 | 0 | 206 | 0 | 0 | 0 | 0 | 188 | 70 | 177 | 179 | 0 | 918 |
| Added | 0 | 0 | 0 | 0 | 0 | 0 | 0 | 0 | 0 | 0 | 0 | 0 | 0 |
| Total | 98 | 0 | 206 | 0 | 0 | 0 | 0 | 188 | 70 | 177 | 179 | 0 | 918 |
| #8 Via Senda at Las Palmas Dr | | | | | | | | | | | | | |
| Base | 0 | 0 | 0 | 226 | 0 | 27 | 27 | 274 | 0 | 0 | 271 | 270 | 1095 |
| Added | 0 | 0 | 0 | 0 | 0 | 0 | 0 | 0 | 0 | 0 | 0 | 0 | 0 |
| Total | 0 | 0 | 0 | 226 | 0 | 27 | 27 | 274 | 0 | 0 | 271 | 270 | 1095 |
| #9 Las Palmas/S La Cumbre Rd at US-101 SB Ramps | | | | | | | | | | | | | |
| Base | 0 | 314 | 144 | 599 | 385 | 0 | 604 | 1 | 75 | 0 | 0 | 0 | 2122 |
| Added | 0 | 0 | 0 | 0 | 0 | 0 | 0 | 0 | 0 | 0 | 0 | 0 | 0 |
| Total | 0 | 314 | 144 | 599 | 385 | 0 | 604 | 1 | 75 | 0 | 0 | 0 | 2122 |

Traffix 7.9.0215 (c) 2008 Dowling Assoc. Licensed to MMA, LONG BEACH, CA

Valle Verde Home Project
Existing
PM Peak Hour

Impact Analysis Report
Level Of Service

| Intersection | Base LOS | Base Del/ Veh | Base V/ C | Future LOS | Future Del/ Veh | Future V/ C | Change in |
|---|---|---|---|---|---|---|---|
| # 6 Calle de los Amigos at Modoc R | B | 14.9 | 0.000 | B | 14.9 | 0.000 | + 0.000 D/V |
| # 7 Via Senda at Modoc Rd | B | 11.9 | 0.522 | B | 11.9 | 0.522 | + 0.000 V/C |
| # 8 Via Senda at Las Palmas Dr | B | 11.9 | 0.460 | B | 11.9 | 0.460 | + 0.000 V/C |
| # 9 Las Palmas/S La Cumbre Rd at | C | 27.3 | 0.589 | C | 27.3 | 0.589 | + 0.000 D/V |

Traffix 7.9.0215 (c) 2008 Dowling Assoc. Licensed to MMA, LONG BEACH, CA

Valle Verde Home Project
Existing
PM Peak Hour

Level Of Service Computation Report
2000 HCM Unsignalized Method (Base Volume Alternative)

Intersection #6 Calle de los Amigos at Modoc Rd

Average Delay (sec/veh): 2.3 Worst Case Level Of Service: B[ 14.9]

| Street Name: | Calle de los Amigos | | | | | | Modoc Rd | | | | | |
|---|---|---|---|---|---|---|---|---|---|---|---|---|
| Approach: | North Bound | | | South Bound | | | East Bound | | | West Bound | | |
| Movement: | L - T - R | | | L - T - R | | | L - T - R | | | L - T - R | | |
| Control: | Stop Sign | | | Stop Sign | | | Uncontrolled | | | Uncontrolled | | |
| Rights: | Include | | | Include | | | Include | | | Include | | |
| Lanes: | 1 0 0 0 1 | | | 0 0 0 0 0 | | | 0 0 0 1 0 | | | 1 0 1 0 0 | | |
| Volume Module: | | | | | | | | | | | | |
| Base Vol: | 70 | 0 | 35 | 0 | 0 | 0 | 0 | 328 | 109 | 48 | 275 | 0 |
| Growth Adj: | 1.00 | 1.00 | 1.00 | 1.00 | 1.00 | 1.00 | 1.00 | 1.00 | 1.00 | 1.00 | 1.00 | 1.00 |
| Initial Bse: | 70 | 0 | 35 | 0 | 0 | 0 | 0 | 328 | 109 | 48 | 275 | 0 |
| User Adj: | 1.00 | 1.00 | 1.00 | 1.00 | 1.00 | 1.00 | 1.00 | 1.00 | 1.00 | 1.00 | 1.00 | 1.00 |
| PHF Adj: | 1.00 | 1.00 | 1.00 | 1.00 | 1.00 | 1.00 | 1.00 | 1.00 | 1.00 | 1.00 | 1.00 | 1.00 |
| PHF Volume: | 70 | 0 | 35 | 0 | 0 | 0 | 0 | 328 | 109 | 48 | 275 | 0 |
| Reduct Vol: | 0 | 0 | 0 | 0 | 0 | 0 | 0 | 0 | 0 | 0 | 0 | 0 |
| FinalVolume: | 70 | 0 | 35 | 0 | 0 | 0 | 0 | 328 | 109 | 48 | 275 | 0 |
| Critical Gap Module: | | | | | | | | | | | | |
| Critical Gp: | 6.4 | xxxx | 6.2 | xxxxx | xxxx | xxxxx | xxxxx | xxxx | xxxxx | 4.1 | xxxx | xxxxx |
| FollowUpTim: | 3.5 | xxxx | 3.3 | xxxxx | xxxx | xxxxx | xxxxx | xxxx | xxxxx | 2.2 | xxxx | xxxxx |
| Capacity Module: | | | | | | | | | | | | |
| Cnflict Vol: | 754 | xxxx | 383 | xxxx | xxxx | xxxxx | xxxx | xxxx | xxxxx | 437 | xxxx | xxxxx |
| Potent Cap.: | 380 | xxxx | 669 | xxxx | xxxx | xxxxx | xxxx | xxxx | xxxxx | 1134 | xxxx | xxxxx |
| Move Cap.: | 368 | xxxx | 669 | xxxx | xxxx | xxxxx | xxxx | xxxx | xxxxx | 1134 | xxxx | xxxxx |
| Volume/Cap: | 0.19 | xxxx | 0.05 | xxxx | xxxx | xxxx | xxxx | xxxx | xxxx | 0.04 | xxxx | xxxx |
| Level Of Service Module: | | | | | | | | | | | | |
| 2Way95thQ: | 0.7 | xxxx | 0.2 | xxxx | xxxx | xxxxx | xxxx | xxxx | xxxxx | 0.1 | xxxx | xxxxx |
| Control Del: | 17.1 | xxxx | 10.7 | xxxxx | xxxx | xxxxx | xxxxx | xxxx | xxxxx | 8.3 | xxxx | xxxxx |
| LOS by Move: | C | * | B | * | * | * | * | * | * | A | * | * |
| Movement: | LT - LTR - RT | | | LT - LTR - RT | | | LT - LTR - RT | | | LT - LTR - RT | | |
| Shared Cap.: | xxxx | xxxx | xxxxx | xxxx | xxxx | xxxxx | xxxx | xxxx | xxxxx | xxxx | xxxx | xxxxx |
| SharedQueue: | xxxxx | xxxx | xxxxx | xxxxx | xxxx | xxxxx | xxxxx | xxxx | xxxxx | xxxxx | xxxx | xxxxx |
| Shrd ConDel: | xxxxx | xxxx | xxxxx | xxxxx | xxxx | xxxxx | xxxxx | xxxx | xxxxx | xxxxx | xxxx | xxxxx |
| Shared LOS: | * | * | * | * | * | * | * | * | * | * | * | * |
| ApproachDel: | 14.9 | | | xxxxxx | | | xxxxxx | | | xxxxxx | | |
| ApproachLOS: | B | | | * | | | * | | | * | | |

Note: Queue reported is the number of cars per lane.

Valle Verde Home Project
Existing
PM Peak Hour

Level Of Service Computation Report
2000 HCM 4-Way Stop Method (Base Volume Alternative)

Intersection #7 Via Senda at Modoc Rd

| | | | |
|---|---|---|---|
| Cycle (sec): | 100 | Critical Vol./Cap.(X): | 0.522 |
| Loss Time (sec): | 0 (Y+R=4.0 sec) | Average Delay (sec/veh): | 11.9 |
| Optimal Cycle: | 0 | Level Of Service: | B |

| Street Name: | Via Senda | | | | | | Modoc Rd | | | | | |
|---|---|---|---|---|---|---|---|---|---|---|---|---|
| Approach: | North Bound | | | South Bound | | | East Bound | | | West Bound | | |
| Movement: | L - T - R | | | L - T - R | | | L - T - R | | | L - T - R | | |
| Control: | Stop Sign | | | Stop Sign | | | Stop Sign | | | Stop Sign | | |
| Rights: | Include | | | Include | | | Include | | | Include | | |
| Min. Green: | 0 | 0 | 0 | 0 | 0 | 0 | 0 | 0 | 0 | 0 | 0 | 0 |
| Lanes: | 0 0 | 1! 0 | 0 | 0 0 | 0 0 | 0 | 0 0 | 0 1 | 0 | 0 1 | 0 0 | 0 |
| Volume Module: | | | | | | | | | | | | |
| Base Vol: | 98 | 0 | 206 | 0 | 0 | 0 | 0 | 188 | 70 | 177 | 179 | 0 |
| Growth Adj: | 1.00 | 1.00 | 1.00 | 1.00 | 1.00 | 1.00 | 1.00 | 1.00 | 1.00 | 1.00 | 1.00 | 1.00 |
| Initial Bse: | 98 | 0 | 206 | 0 | 0 | 0 | 0 | 188 | 70 | 177 | 179 | 0 |
| User Adj: | 1.00 | 1.00 | 1.00 | 1.00 | 1.00 | 1.00 | 1.00 | 1.00 | 1.00 | 1.00 | 1.00 | 1.00 |
| PHF Adj: | 1.00 | 1.00 | 1.00 | 1.00 | 1.00 | 1.00 | 1.00 | 1.00 | 1.00 | 1.00 | 1.00 | 1.00 |
| PHF Volume: | 98 | 0 | 206 | 0 | 0 | 0 | 0 | 188 | 70 | 177 | 179 | 0 |
| Reduct Vol: | 0 | 0 | 0 | 0 | 0 | 0 | 0 | 0 | 0 | 0 | 0 | 0 |
| Reduced Vol: | 98 | 0 | 206 | 0 | 0 | 0 | 0 | 188 | 70 | 177 | 179 | 0 |
| PCE Adj: | 1.00 | 1.00 | 1.00 | 1.00 | 1.00 | 1.00 | 1.00 | 1.00 | 1.00 | 1.00 | 1.00 | 1.00 |
| MLF Adj: | 1.00 | 1.00 | 1.00 | 1.00 | 1.00 | 1.00 | 1.00 | 1.00 | 1.00 | 1.00 | 1.00 | 1.00 |
| FinalVolume: | 98 | 0 | 206 | 0 | 0 | 0 | 0 | 188 | 70 | 177 | 179 | 0 |
| Saturation Flow Module: | | | | | | | | | | | | |
| Adjustment: | 1.00 | 1.00 | 1.00 | 1.00 | 1.00 | 1.00 | 1.00 | 1.00 | 1.00 | 1.00 | 1.00 | 1.00 |
| Lanes: | 0.32 | 0.00 | 0.68 | 0.00 | 0.00 | 0.00 | 0.00 | 0.73 | 0.27 | 0.50 | 0.50 | 0.00 |
| Final Sat.: | 219 | 0 | 461 | 0 | 0 | 0 | 0 | 502 | 187 | 339 | 343 | 0 |
| Capacity Analysis Module: | | | | | | | | | | | | |
| Vol/Sat: | 0.45 | xxxx | 0.45 | xxxx | xxxx | xxxx | xxxx | 0.37 | 0.37 | 0.52 | 0.52 | xxxx |
| Crit Moves: | **** | | | | | | | **** | | **** | | |
| Delay/Veh: | 11.5 | 0.0 | 11.5 | 0.0 | 0.0 | 0.0 | 0.0 | 10.7 | 10.7 | 13.2 | 13.2 | 0.0 |
| Delay Adj: | 1.00 | 1.00 | 1.00 | 1.00 | 1.00 | 1.00 | 1.00 | 1.00 | 1.00 | 1.00 | 1.00 | 1.00 |
| AdjDel/Veh: | 11.5 | 0.0 | 11.5 | 0.0 | 0.0 | 0.0 | 0.0 | 10.7 | 10.7 | 13.2 | 13.2 | 0.0 |
| LOS by Move: | B | * | B | * | * | * | * | B | B | B | B | * |
| ApproachDel: | 11.5 | | | xxxxxx | | | 10.7 | | | 13.2 | | |
| Delay Adj: | 1.00 | | | xxxxx | | | 1.00 | | | 1.00 | | |
| ApprAdjDel: | 11.5 | | | xxxxxx | | | 10.7 | | | 13.2 | | |
| LOS by Appr: | B | | | * | | | B | | | B | | |
| AllWayAvgQ: | 0.7 | 0.7 | 0.7 | 0.0 | 0.0 | 0.0 | 0.5 | 0.5 | 0.5 | 1.0 | 1.0 | 1.0 |

Note: Queue reported is the number of cars per lane.

Valle Verde Home Project
Existing
PM Peak Hour

Level Of Service Computation Report
2000 HCM 4-Way Stop Method (Base Volume Alternative)

Intersection #8 Via Senda at Las Palmas Dr

Cycle (sec): 100 Critical Vol./Cap.(X): 0.460
Loss Time (sec): 0 (Y+R=4.0 sec) Average Delay (sec/veh): 11.9
Optimal Cycle: 0 Level Of Service: B

| Street Name: | Via Senda | | | | | | Las Palmas Dr | | | | | |
|---|---|---|---|---|---|---|---|---|---|---|---|---|
| Approach: | North Bound | | | South Bound | | | East Bound | | | West Bound | | |
| Movement: | L - | T - | R | L - | T - | R | L - | T - | R | L - | T - | R |
| Control: | Stop Sign | | | Stop Sign | | | Stop Sign | | | Stop Sign | | |
| Rights: | Include | | | Include | | | Include | | | Include | | |
| Min. Green: | 0 | 0 | 0 | 0 | 0 | 0 | 0 | 0 | 0 | 0 | 0 | 0 |
| Lanes: | 0 0 | 0 0 | 0 | 0 0 | 1! 0 | 0 | 0 1 | 0 0 | 0 | 0 0 | 1 0 | 1 |
| Volume Module: | | | | | | | | | | | | |
| Base Vol: | 0 | 0 | 0 | 226 | 0 | 27 | 27 | 274 | 0 | 0 | 271 | 270 |
| Growth Adj: | 1.00 | 1.00 | 1.00 | 1.00 | 1.00 | 1.00 | 1.00 | 1.00 | 1.00 | 1.00 | 1.00 | 1.00 |
| Initial Bse: | 0 | 0 | 0 | 226 | 0 | 27 | 27 | 274 | 0 | 0 | 271 | 270 |
| User Adj: | 1.00 | 1.00 | 1.00 | 1.00 | 1.00 | 1.00 | 1.00 | 1.00 | 1.00 | 1.00 | 1.00 | 1.00 |
| PHF Adj: | 1.00 | 1.00 | 1.00 | 1.00 | 1.00 | 1.00 | 1.00 | 1.00 | 1.00 | 1.00 | 1.00 | 1.00 |
| PHF Volume: | 0 | 0 | 0 | 226 | 0 | 27 | 27 | 274 | 0 | 0 | 271 | 270 |
| Reduct Vol: | 0 | 0 | 0 | 0 | 0 | 0 | 0 | 0 | 0 | 0 | 0 | 0 |
| Reduced Vol: | 0 | 0 | 0 | 226 | 0 | 27 | 27 | 274 | 0 | 0 | 271 | 270 |
| PCE Adj: | 1.00 | 1.00 | 1.00 | 1.00 | 1.00 | 1.00 | 1.00 | 1.00 | 1.00 | 1.00 | 1.00 | 1.00 |
| MLF Adj: | 1.00 | 1.00 | 1.00 | 1.00 | 1.00 | 1.00 | 1.00 | 1.00 | 1.00 | 1.00 | 1.00 | 1.00 |
| FinalVolume: | 0 | 0 | 0 | 226 | 0 | 27 | 27 | 274 | 0 | 0 | 271 | 270 |
| Saturation Flow Module: | | | | | | | | | | | | |
| Adjustment: | 1.00 | 1.00 | 1.00 | 1.00 | 1.00 | 1.00 | 1.00 | 1.00 | 1.00 | 1.00 | 1.00 | 1.00 |
| Lanes: | 0.00 | 0.00 | 0.00 | 0.89 | 0.00 | 0.11 | 0.09 | 0.91 | 0.00 | 0.00 | 1.00 | 1.00 |
| Final Sat.: | 0 | 0 | 0 | 531 | 0 | 63 | 59 | 596 | 0 | 0 | 633 | 722 |
| Capacity Analysis Module: | | | | | | | | | | | | |
| Vol/Sat: | xxxx | xxxx | xxxx | 0.43 | xxxx | 0.43 | 0.46 | 0.46 | xxxx | xxxx | 0.43 | 0.37 |
| Crit Moves: | | | | | | **** | | **** | | | **** | |
| Delay/Veh: | 0.0 | 0.0 | 0.0 | 12.6 | 0.0 | 12.6 | 12.6 | 12.6 | 0.0 | 0.0 | 12.2 | 10.4 |
| Delay Adj: | 1.00 | 1.00 | 1.00 | 1.00 | 1.00 | 1.00 | 1.00 | 1.00 | 1.00 | 1.00 | 1.00 | 1.00 |
| AdjDel/Veh: | 0.0 | 0.0 | 0.0 | 12.6 | 0.0 | 12.6 | 12.6 | 12.6 | 0.0 | 0.0 | 12.2 | 10.4 |
| LOS by Move: | * | * | * | B | * | B | B | B | * | * | B | B |
| ApproachDel: | xxxxxx | | | 12.6 | | | 12.6 | | | 11.3 | | |
| Delay Adj: | xxxxx | | | 1.00 | | | 1.00 | | | 1.00 | | |
| ApprAdjDel: | xxxxxx | | | 12.6 | | | 12.6 | | | 11.3 | | |
| LOS by Appr: | * | | | B | | | B | | | B | | |
| AllWayAvgQ: | 0.0 | 0.0 | 0.0 | 0.6 | 0.6 | 0.6 | 0.8 | 0.8 | 0.8 | 0.0 | 0.7 | 0.6 |

Note: Queue reported is the number of cars per lane.

Valle Verde Home Project
Existing
PM Peak Hour

Level Of Service Computation Report
2000 HCM Operations Method (Base Volume Alternative)

Intersection #9 Las Palmas/S La Cumbre Rd at US-101 SB Ramps

| | | | |
|---|---|---|---|
| Cycle (sec): | 100 | Critical Vol./Cap.(X): | 0.589 |
| Loss Time (sec): | 10 (Y+R=4.0 sec) | Average Delay (sec/veh): | 27.3 |
| Optimal Cycle: | 43 | Level Of Service: | C |

| Approach: | North Bound | | | South Bound | | | East Bound | | | West Bound | | |
|---|---|---|---|---|---|---|---|---|---|---|---|---|
| Movement: | L - | T - | R | L - | T - | R | L - | T - | R | L - | T - | R |
| Control: | Protected | | | Protected | | | Protected | | | Protected | | |
| Rights: | Include | | | Include | | | Include | | | Include | | |
| Min. Green: | 0 | 0 | 0 | 0 | 0 | 0 | 0 | 0 | 0 | 0 | 0 | 0 |
| Lanes: | 0 0 | 2 0 | 1 | 2 0 | 1 0 | 0 | 1 1 | 0 0 | 1 | 0 0 | 0 0 | 0 |
| Volume Module: | | | | | | | | | | | | |
| Base Vol: | 0 | 314 | 144 | 599 | 385 | 0 | 604 | 1 | 75 | 0 | 0 | 0 |
| Growth Adj: | 1.00 | 1.00 | 1.00 | 1.00 | 1.00 | 1.00 | 1.00 | 1.00 | 1.00 | 1.00 | 1.00 | 1.00 |
| Initial Bse: | 0 | 314 | 144 | 599 | 385 | 0 | 604 | 1 | 75 | 0 | 0 | 0 |
| User Adj: | 1.00 | 1.00 | 1.00 | 1.00 | 1.00 | 1.00 | 1.00 | 1.00 | 1.00 | 1.00 | 1.00 | 1.00 |
| PHF Adj: | 1.00 | 1.00 | 1.00 | 1.00 | 1.00 | 1.00 | 1.00 | 1.00 | 1.00 | 1.00 | 1.00 | 1.00 |
| PHF Volume: | 0 | 314 | 144 | 599 | 385 | 0 | 604 | 1 | 75 | 0 | 0 | 0 |
| Reduct Vol: | 0 | 0 | 0 | 0 | 0 | 0 | 0 | 0 | 0 | 0 | 0 | 0 |
| Reduced Vol: | 0 | 314 | 144 | 599 | 385 | 0 | 604 | 1 | 75 | 0 | 0 | 0 |
| PCE Adj: | 1.00 | 1.00 | 1.00 | 1.00 | 1.00 | 1.00 | 1.00 | 1.00 | 1.00 | 1.00 | 1.00 | 1.00 |
| MLF Adj: | 1.00 | 1.00 | 1.00 | 1.00 | 1.00 | 1.00 | 1.00 | 1.00 | 1.00 | 1.00 | 1.00 | 1.00 |
| FinalVolume: | 0 | 314 | 144 | 599 | 385 | 0 | 604 | 1 | 75 | 0 | 0 | 0 |
| Saturation Flow Module: | | | | | | | | | | | | |
| Sat/Lane: | 1900 | 1900 | 1900 | 1900 | 1900 | 1900 | 1900 | 1900 | 1900 | 1900 | 1900 | 1900 |
| Adjustment: | 1.00 | 0.95 | 0.85 | 0.74 | 1.00 | 1.00 | 0.69 | 0.87 | 0.85 | 1.00 | 1.00 | 1.00 |
| Lanes: | 0.00 | 2.00 | 1.00 | 2.00 | 1.00 | 0.00 | 1.99 | 0.01 | 1.00 | 0.00 | 0.00 | 0.00 |
| Final Sat.: | 0 | 3610 | 1615 | 2801 | 1900 | 0 | 2632 | 4 | 1615 | 0 | 0 | 0 |
| Capacity Analysis Module: | | | | | | | | | | | | |
| Vol/Sat: | 0.00 | 0.09 | 0.09 | 0.21 | 0.20 | 0.00 | 0.23 | 0.23 | 0.05 | 0.00 | 0.00 | 0.00 |
| Crit Moves: | | **** | | **** | | | **** | | | | | |
| Green/Cycle: | 0.00 | 0.15 | 0.15 | 0.36 | 0.51 | 0.00 | 0.39 | 0.39 | 0.39 | 0.00 | 0.00 | 0.00 |
| Volume/Cap: | 0.00 | 0.59 | 0.60 | 0.59 | 0.40 | 0.00 | 0.59 | 0.59 | 0.12 | 0.00 | 0.00 | 0.00 |
| Delay/Veh: | 0.0 | 41.5 | 44.2 | 26.7 | 15.3 | 0.0 | 25.1 | 25.1 | 19.6 | 0.0 | 0.0 | 0.0 |
| User DelAdj: | 1.00 | 1.00 | 1.00 | 1.00 | 1.00 | 1.00 | 1.00 | 1.00 | 1.00 | 1.00 | 1.00 | 1.00 |
| AdjDel/Veh: | 0.0 | 41.5 | 44.2 | 26.7 | 15.3 | 0.0 | 25.1 | 25.1 | 19.6 | 0.0 | 0.0 | 0.0 |
| LOS by Move: | A | D | D | C | B | A | C | C | B | A | A | A |
| HCM2kAvgQ: | 0 | 6 | 5 | 8 | 7 | 0 | 8 | 10 | 1 | 0 | 0 | 0 |

Note: Queue reported is the number of cars per lane.

# FUTURE WITHOUT PROJECT
# LOS WORKSHEETS

# WEEKDAY AM PEAK HOUR

Valle Verde Home Project
Existing + Ambient
AM Peak Hour

Scenario Report

| | |
|---|---|
| Scenario: | E+A AM |
| Command: | E+A AM |
| Volume: | E+A AM |
| Geometry: | Existing |
| Impact Fee: | Default Impact Fee |
| Trip Generation: | none |
| Trip Distribution: | none |
| Paths: | Default Path |
| Routes: | Default Route |
| Configuration: | E+A AM |

Valle Verde Home Project
Existing + Ambient
AM Peak Hour

Turning Movement Report
none

| Volume | Northbound | | | Southbound | | | Eastbound | | | Westbound | | | Total |
|---|---|---|---|---|---|---|---|---|---|---|---|---|---|
| Type | Left | Thru | Right | Left | Thru | Right | Left | Thru | Right | Left | Thru | Right | Volume |
| #6 Calle de los Amigos at Modoc Rd | | | | | | | | | | | | | |
| Base | 98 | 0 | 46 | 0 | 0 | 0 | 0 | 198 | 53 | 19 | 312 | 0 | 726 |
| Added | 0 | 0 | 0 | 0 | 0 | 0 | 0 | 0 | 0 | 0 | 0 | 0 | 0 |
| Total | 98 | 0 | 46 | 0 | 0 | 0 | 0 | 198 | 53 | 19 | 312 | 0 | 726 |
| #7 Via Senda at Modoc Rd | | | | | | | | | | | | | |
| Base | 38 | 0 | 139 | 0 | 0 | 0 | 0 | 118 | 96 | 179 | 134 | 0 | 703 |
| Added | 0 | 0 | 0 | 0 | 0 | 0 | 0 | 0 | 0 | 0 | 0 | 0 | 0 |
| Total | 38 | 0 | 139 | 0 | 0 | 0 | 0 | 118 | 96 | 179 | 134 | 0 | 703 |
| #8 Via Senda at Las Palmas Dr | | | | | | | | | | | | | |
| Base | 0 | 0 | 0 | 242 | 0 | 35 | 27 | 289 | 0 | 0 | 344 | 149 | 1084 |
| Added | 0 | 0 | 0 | 0 | 0 | 0 | 0 | 0 | 0 | 0 | 0 | 0 | 0 |
| Total | 0 | 0 | 0 | 242 | 0 | 35 | 27 | 289 | 0 | 0 | 344 | 149 | 1084 |
| #9 Las Palmas/S La Cumbre Rd at US-101 SB Ramps | | | | | | | | | | | | | |
| Base | 0 | 430 | 244 | 458 | 393 | 0 | 467 | 5 | 112 | 0 | 0 | 0 | 2109 |
| Added | 0 | 0 | 0 | 0 | 0 | 0 | 0 | 0 | 0 | 0 | 0 | 0 | 0 |
| Total | 0 | 430 | 244 | 458 | 393 | 0 | 467 | 5 | 112 | 0 | 0 | 0 | 2109 |

Valle Verde Home Project
Existing + Ambient
AM Peak Hour

Impact Analysis Report
Level Of Service

| Intersection | Base LOS | Base Del/ Veh | Base V/ C | Future LOS | Future Del/ Veh | Future V/ C | Change in |
|---|---|---|---|---|---|---|---|
| # 6 Calle de los Amigos at Modoc R | B | 12.9 | 0.000 | B | 12.9 | 0.000 | + 0.000 D/V |
| # 7 Via Senda at Modoc Rd | A | 9.7 | 0.415 | A | 9.7 | 0.415 | + 0.000 V/C |
| # 8 Via Senda at Las Palmas Dr | B | 13.2 | 0.554 | B | 13.2 | 0.554 | + 0.000 V/C |
| # 9 Las Palmas/S La Cumbre Rd at | B | xxxxx | 0.616 | B | xxxxx | 0.616 | + 0.000 V/C |

Traffix 7.9.0215 (c) 2008 Dowling Assoc. Licensed to MMA, LONG BEACH, CA

Valle Verde Home Project
Existing + Ambient
AM Peak Hour

Level Of Service Computation Report
2000 HCM Unsignalized Method (Future Volume Alternative)

Intersection #6 Calle de los Amigos at Modoc Rd

Average Delay (sec/veh): 2.8 Worst Case Level Of Service: B[ 12.9]

| Street Name: | Calle de los Amigos | | | | | | | | | Modoc Rd | | | | | | | | |
|---|---|---|---|---|---|---|---|---|---|---|---|---|---|---|---|---|---|---|
| Approach: | North Bound | | | | | South Bound | | | | East Bound | | | | | West Bound | | | |
| Movement: | L | - | T | - | R | L | - | T | - | R | L | - | T | - | R | L | - | T | - | R |
| Control: | Stop Sign | | | | | Stop Sign | | | | | Uncontrolled | | | | | Uncontrolled | | | | |
| Rights: | Include | | | | | Include | | | | | Include | | | | | Include | | | | |
| Lanes: | 1 | 0 | 0 | 0 | 1 | 0 | 0 | 0 | 0 | 0 | 0 | 0 | 0 | 1 | 0 | 1 | 0 | 1 | 0 | 0 |
| Volume Module: | | | | | | | | | | | | | | | | | | | | |
| Base Vol: | 96 | | 0 | | 45 | 0 | | 0 | | 0 | 0 | | 194 | | 52 | 19 | | 306 | | 0 |
| Growth Adj: | 1.02 | 1.02 | | 1.02 | | 1.02 | 1.02 | | 1.02 | | 1.02 | 1.02 | | 1.02 | | 1.02 | 1.02 | | 1.02 | |
| Initial Bse: | 98 | | 0 | | 46 | 0 | | 0 | | 0 | 0 | | 198 | | 53 | 19 | | 312 | | 0 |
| Added Vol: | 0 | | 0 | | 0 | 0 | | 0 | | 0 | 0 | | 0 | | 0 | 0 | | 0 | | 0 |
| PasserByVol: | 0 | | 0 | | 0 | 0 | | 0 | | 0 | 0 | | 0 | | 0 | 0 | | 0 | | 0 |
| Initial Fut: | 98 | | 0 | | 46 | 0 | | 0 | | 0 | 0 | | 198 | | 53 | 19 | | 312 | | 0 |
| User Adj: | 1.00 | 1.00 | | 1.00 | | 1.00 | 1.00 | | 1.00 | | 1.00 | 1.00 | | 1.00 | | 1.00 | 1.00 | | 1.00 | |
| PHF Adj: | 1.00 | 1.00 | | 1.00 | | 1.00 | 1.00 | | 1.00 | | 1.00 | 1.00 | | 1.00 | | 1.00 | 1.00 | | 1.00 | |
| PHF Volume: | 98 | | 0 | | 46 | 0 | | 0 | | 0 | 0 | | 198 | | 53 | 19 | | 312 | | 0 |
| Reduct Vol: | 0 | | 0 | | 0 | 0 | | 0 | | 0 | 0 | | 0 | | 0 | 0 | | 0 | | 0 |
| FinalVolume: | 98 | | 0 | | 46 | 0 | | 0 | | 0 | 0 | | 198 | | 53 | 19 | | 312 | | 0 |
| Critical Gap Module: | | | | | | | | | | | | | | | | | | | | |
| Critical Gp: | 6.4 | xxxx | | 6.2 | xxxxx | xxxx | xxxxx | xxxxx | xxxx | xxxxx | | 4.1 | xxxx | xxxxx | | | | | | |
| FollowUpTim: | 3.5 | xxxx | | 3.3 | xxxxx | xxxx | xxxxx | xxxxx | xxxx | xxxxx | | 2.2 | xxxx | xxxxx | | | | | | |
| Capacity Module: | | | | | | | | | | | | | | | | | | | | |
| Cnflict Vol: | 575 | xxxx | | 224 | xxxx | xxxx | xxxxx | xxxx | xxxx | xxxxx | | 251 | xxxx | xxxxx | | | | | | |
| Potent Cap.: | 483 | xxxx | | 820 | xxxx | xxxx | xxxxx | xxxx | xxxx | xxxxx | | 1326 | xxxx | xxxxx | | | | | | |
| Move Cap.: | 478 | xxxx | | 820 | xxxx | xxxx | xxxxx | xxxx | xxxx | xxxxx | | 1326 | xxxx | xxxxx | | | | | | |
| Volume/Cap: | 0.21 | xxxx | | 0.06 | xxxx | xxxx | xxxx | xxxx | xxxx | xxxx | | 0.01 | xxxx | xxxx | | | | | | |
| Level Of Service Module: | | | | | | | | | | | | | | | | | | | | |
| 2Way95thQ: | 0.8 | xxxx | | 0.2 | xxxx | xxxx | xxxxx | xxxx | xxxx | xxxxx | | 0.0 | xxxx | xxxxx | | | | | | |
| Control Del: | 14.5 | xxxx | | 9.6 | xxxxx | xxxx | xxxxx | xxxxx | xxxx | xxxxx | | 7.8 | xxxx | xxxxx | | | | | | |
| LOS by Move: | B | * | | A | * | * | * | * | * | * | | A | * | * | | | | | | |
| Movement: | LT | - | LTR | - | RT | LT | - | LTR | - | RT | LT | - | LTR | - | RT | LT | - | LTR | - | RT |
| Shared Cap.: | xxxx | xxxx | | xxxxx | | xxxx | xxxx | xxxxx | | | xxxx | xxxx | xxxxx | | | xxxx | xxxx | xxxxx | | |
| SharedQueue: | xxxxx | xxxx | | xxxxx | | xxxxx | xxxx | xxxxx | | | xxxxx | xxxx | xxxxx | | | xxxxx | xxxx | xxxxx | | |
| Shrd ConDel: | xxxxx | xxxx | | xxxxx | | xxxxx | xxxx | xxxxx | | | xxxxx | xxxx | xxxxx | | | xxxxx | xxxx | xxxxx | | |
| Shared LOS: | * | * | | * | | * | * | * | | | * | * | * | | | * | * | * | | |
| ApproachDel: | | | 12.9 | | | | | xxxxxx | | | | | xxxxxx | | | | | xxxxxx | | |
| ApproachLOS: | | | B | | | | | * | | | | | * | | | | | * | | |

Note: Queue reported is the number of cars per lane.

Valle Verde Home Project
Existing + Ambient
AM Peak Hour

Level Of Service Computation Report
2000 HCM 4-Way Stop Method (Future Volume Alternative)

Intersection #7 Via Senda at Modoc Rd

Cycle (sec): 100 Critical Vol./Cap.(X): 0.415
Loss Time (sec): 0 (Y+R=4.0 sec) Average Delay (sec/veh): 9.7
Optimal Cycle: 0 Level Of Service: A

| Street Name: | Via Senda | | | | | | Modoc Rd | | | | | |
|---|---|---|---|---|---|---|---|---|---|---|---|---|
| Approach: | North Bound | | | South Bound | | | East Bound | | | West Bound | | |
| Movement: | L - | T - | R | L - | T - | R | L - | T - | R | L - | T - | R |
| Control: | Stop Sign | | | Stop Sign | | | Stop Sign | | | Stop Sign | | |
| Rights: | Include | | | Include | | | Include | | | Include | | |
| Min. Green: | 0 | 0 | 0 | 0 | 0 | 0 | 0 | 0 | 0 | 0 | 0 | 0 |
| Lanes: | 0 0 | 1! 0 | 0 | 0 0 | 0 0 | 0 | 0 0 | 0 1 | 0 | 0 1 | 0 0 | 0 |
| Volume Module: | | | | | | | | | | | | |
| Base Vol: | 37 | 0 | 136 | 0 | 0 | 0 | 0 | 116 | 94 | 175 | 131 | 0 |
| Growth Adj: | 1.02 | 1.02 | 1.02 | 1.02 | 1.02 | 1.02 | 1.02 | 1.02 | 1.02 | 1.02 | 1.02 | 1.02 |
| Initial Bse: | 38 | 0 | 139 | 0 | 0 | 0 | 0 | 118 | 96 | 179 | 134 | 0 |
| Added Vol: | 0 | 0 | 0 | 0 | 0 | 0 | 0 | 0 | 0 | 0 | 0 | 0 |
| PasserByVol: | 0 | 0 | 0 | 0 | 0 | 0 | 0 | 0 | 0 | 0 | 0 | 0 |
| Initial Fut: | 38 | 0 | 139 | 0 | 0 | 0 | 0 | 118 | 96 | 179 | 134 | 0 |
| User Adj: | 1.00 | 1.00 | 1.00 | 1.00 | 1.00 | 1.00 | 1.00 | 1.00 | 1.00 | 1.00 | 1.00 | 1.00 |
| PHF Adj: | 1.00 | 1.00 | 1.00 | 1.00 | 1.00 | 1.00 | 1.00 | 1.00 | 1.00 | 1.00 | 1.00 | 1.00 |
| PHF Volume: | 38 | 0 | 139 | 0 | 0 | 0 | 0 | 118 | 96 | 179 | 134 | 0 |
| Reduct Vol: | 0 | 0 | 0 | 0 | 0 | 0 | 0 | 0 | 0 | 0 | 0 | 0 |
| Reduced Vol: | 38 | 0 | 139 | 0 | 0 | 0 | 0 | 118 | 96 | 179 | 134 | 0 |
| PCE Adj: | 1.00 | 1.00 | 1.00 | 1.00 | 1.00 | 1.00 | 1.00 | 1.00 | 1.00 | 1.00 | 1.00 | 1.00 |
| MLF Adj: | 1.00 | 1.00 | 1.00 | 1.00 | 1.00 | 1.00 | 1.00 | 1.00 | 1.00 | 1.00 | 1.00 | 1.00 |
| FinalVolume: | 38 | 0 | 139 | 0 | 0 | 0 | 0 | 118 | 96 | 179 | 134 | 0 |
| Saturation Flow Module: | | | | | | | | | | | | |
| Adjustment: | 1.00 | 1.00 | 1.00 | 1.00 | 1.00 | 1.00 | 1.00 | 1.00 | 1.00 | 1.00 | 1.00 | 1.00 |
| Lanes: | 0.21 | 0.00 | 0.79 | 0.00 | 0.00 | 0.00 | 0.00 | 0.55 | 0.45 | 0.57 | 0.43 | 0.00 |
| Final Sat.: | 155 | 0 | 571 | 0 | 0 | 0 | 0 | 436 | 353 | 430 | 322 | 0 |
| Capacity Analysis Module: | | | | | | | | | | | | |
| Vol/Sat: | 0.24 | xxxx | 0.24 | xxxx | xxxx | xxxx | xxxx | 0.27 | 0.27 | 0.41 | 0.41 | xxxx |
| Crit Moves: | **** | | | | | | | **** | | | **** | |
| Delay/Veh: | 8.9 | 0.0 | 8.9 | 0.0 | 0.0 | 0.0 | 0.0 | 8.9 | 8.9 | 10.8 | 10.8 | 0.0 |
| Delay Adj: | 1.00 | 1.00 | 1.00 | 1.00 | 1.00 | 1.00 | 1.00 | 1.00 | 1.00 | 1.00 | 1.00 | 1.00 |
| AdjDel/Veh: | 8.9 | 0.0 | 8.9 | 0.0 | 0.0 | 0.0 | 0.0 | 8.9 | 8.9 | 10.8 | 10.8 | 0.0 |
| LOS by Move: | A | * | A | * | * | * | * | A | A | B | B | * |
| ApproachDel: | 8.9 | | | xxxxxx | | | | 8.9 | | | 10.8 | |
| Delay Adj: | 1.00 | | | xxxxx | | | | 1.00 | | | 1.00 | |
| ApprAdjDel: | 8.9 | | | xxxxxx | | | | 8.9 | | | 10.8 | |
| LOS by Appr: | A | | | * | | | | A | | | B | |
| AllWayAvgQ: | 0.3 | 0.3 | 0.3 | 0.0 | 0.0 | 0.0 | 0.3 | 0.3 | 0.3 | 0.7 | 0.7 | 0.7 |

Note: Queue reported is the number of cars per lane.

Traffix 7.9.0215 (c) 2008 Dowling Assoc. Licensed to MMA, LONG BEACH, CA

Valle Verde Home Project
Existing + Ambient
AM Peak Hour

Level Of Service Computation Report
2000 HCM 4-Way Stop Method (Future Volume Alternative)

Intersection #8 Via Senda at Las Palmas Dr

| | | | |
|---|---|---|---|
| Cycle (sec): | 100 | Critical Vol./Cap.(X): | 0.554 |
| Loss Time (sec): | 0 (Y+R=4.0 sec) | Average Delay (sec/veh): | 13.2 |
| Optimal Cycle: | 0 | Level Of Service: | B |

| Street Name: | Via Senda | | | | | | Las Palmas Dr | | | | | |
|---|---|---|---|---|---|---|---|---|---|---|---|---|
| Approach: | North Bound | | | South Bound | | | East Bound | | | West Bound | | |
| Movement: | L - | T - | R | L - | T - | R | L - | T - | R | L - | T - | R |
| Control: | Stop Sign | | | Stop Sign | | | Stop Sign | | | Stop Sign | | |
| Rights: | Include | | | Include | | | Include | | | Include | | |
| Min. Green: | 0 | 0 | 0 | 0 | 0 | 0 | 0 | 0 | 0 | 0 | 0 | 0 |
| Lanes: | 0 0 | 0 0 | 0 | 0 0 | 1! 0 | 0 | 0 1 | 0 0 | 0 | 0 0 | 1 0 | 1 |
| Volume Module: | | | | | | | | | | | | |
| Base Vol: | 0 | 0 | 0 | 237 | 0 | 34 | 26 | 283 | 0 | 0 | 337 | 146 |
| Growth Adj: | 1.02 | 1.02 | 1.02 | 1.02 | 1.02 | 1.02 | 1.02 | 1.02 | 1.02 | 1.02 | 1.02 | 1.02 |
| Initial Bse: | 0 | 0 | 0 | 242 | 0 | 35 | 27 | 289 | 0 | 0 | 344 | 149 |
| Added Vol: | 0 | 0 | 0 | 0 | 0 | 0 | 0 | 0 | 0 | 0 | 0 | 0 |
| PasserByVol: | 0 | 0 | 0 | 0 | 0 | 0 | 0 | 0 | 0 | 0 | 0 | 0 |
| Initial Fut: | 0 | 0 | 0 | 242 | 0 | 35 | 27 | 289 | 0 | 0 | 344 | 149 |
| User Adj: | 1.00 | 1.00 | 1.00 | 1.00 | 1.00 | 1.00 | 1.00 | 1.00 | 1.00 | 1.00 | 1.00 | 1.00 |
| PHF Adj: | 1.00 | 1.00 | 1.00 | 1.00 | 1.00 | 1.00 | 1.00 | 1.00 | 1.00 | 1.00 | 1.00 | 1.00 |
| PHF Volume: | 0 | 0 | 0 | 242 | 0 | 35 | 27 | 289 | 0 | 0 | 344 | 149 |
| Reduct Vol: | 0 | 0 | 0 | 0 | 0 | 0 | 0 | 0 | 0 | 0 | 0 | 0 |
| Reduced Vol: | 0 | 0 | 0 | 242 | 0 | 35 | 27 | 289 | 0 | 0 | 344 | 149 |
| PCE Adj: | 1.00 | 1.00 | 1.00 | 1.00 | 1.00 | 1.00 | 1.00 | 1.00 | 1.00 | 1.00 | 1.00 | 1.00 |
| MLF Adj: | 1.00 | 1.00 | 1.00 | 1.00 | 1.00 | 1.00 | 1.00 | 1.00 | 1.00 | 1.00 | 1.00 | 1.00 |
| FinalVolume: | 0 | 0 | 0 | 242 | 0 | 35 | 27 | 289 | 0 | 0 | 344 | 149 |
| Saturation Flow Module: | | | | | | | | | | | | |
| Adjustment: | 1.00 | 1.00 | 1.00 | 1.00 | 1.00 | 1.00 | 1.00 | 1.00 | 1.00 | 1.00 | 1.00 | 1.00 |
| Lanes: | 0.00 | 0.00 | 0.00 | 0.87 | 0.00 | 0.13 | 0.08 | 0.92 | 0.00 | 0.00 | 1.00 | 1.00 |
| Final Sat.: | 0 | 0 | 0 | 518 | 0 | 74 | 54 | 590 | 0 | 0 | 620 | 705 |
| Capacity Analysis Module: | | | | | | | | | | | | |
| Vol/Sat: | xxxx | xxxx | xxxx | 0.47 | xxxx | 0.47 | 0.49 | 0.49 | xxxx | xxxx | 0.55 | 0.21 |
| Crit Moves: | | | | **** | | | | **** | | | **** | |
| Delay/Veh: | 0.0 | 0.0 | 0.0 | 13.3 | 0.0 | 13.3 | 13.2 | 13.2 | 0.0 | 0.0 | 14.9 | 9.0 |
| Delay Adj: | 1.00 | 1.00 | 1.00 | 1.00 | 1.00 | 1.00 | 1.00 | 1.00 | 1.00 | 1.00 | 1.00 | 1.00 |
| AdjDel/Veh: | 0.0 | 0.0 | 0.0 | 13.3 | 0.0 | 13.3 | 13.2 | 13.2 | 0.0 | 0.0 | 14.9 | 9.0 |
| LOS by Move: | * | * | * | B | * | B | B | B | * | * | B | A |
| ApproachDel: | xxxxxx | | | 13.3 | | | 13.2 | | | 13.1 | | |
| Delay Adj: | xxxxx | | | 1.00 | | | 1.00 | | | 1.00 | | |
| ApprAdjDel: | xxxxxx | | | 13.3 | | | 13.2 | | | 13.1 | | |
| LOS by Appr: | * | | | B | | | B | | | B | | |
| AllWayAvgQ: | 0.0 | 0.0 | 0.0 | 0.7 | 0.7 | 0.7 | 0.9 | 0.9 | 0.9 | 0.0 | 1.1 | 0.3 |

Note: Queue reported is the number of cars per lane.

Valle Verde Home Project
Existing + Ambient
AM Peak Hour

Level Of Service Computation Report
ICU 1(Loss as Cycle Length %) Method (Future Volume Alternative)

Intersection #9 Las Positas/S La Cumbre Rd at US-101 SB Ramps

| | | | |
|---|---|---|---|
| Cycle (sec): | 100 | Critical Vol./Cap.(X): | 0.616 |
| Loss Time (sec): | 10 (Y+R=4.0 sec) | Average Delay (sec/veh): | xxxxxx |
| Optimal Cycle: | 41 | Level Of Service: | B |

| Approach: | North Bound | | | South Bound | | | East Bound | | | West Bound | | |
|---|---|---|---|---|---|---|---|---|---|---|---|---|
| Movement: | L - | T - | R | L - | T - | R | L - | T - | R | L - | T - | R |
| Control: | Protected | | | Protected | | | Protected | | | Protected | | |
| Rights: | Include | | | Include | | | Include | | | Include | | |
| Min. Green: | 0 | 0 | 0 | 0 | 0 | 0 | 0 | 0 | 0 | 0 | 0 | 0 |
| Lanes: | 0 0 | 2 0 | 1 | 2 0 | 1 0 | 0 | 1 1 | 0 0 | 1 | 0 0 | 0 0 | 0 |
| Volume Module: | | | | | | | | | | | | |
| Base Vol: | 0 | 422 | 239 | 449 | 385 | 0 | 458 | 5 | 110 | 0 | 0 | 0 |
| Growth Adj: | 1.02 | 1.02 | 1.02 | 1.02 | 1.02 | 1.02 | 1.02 | 1.02 | 1.02 | 1.02 | 1.02 | 1.02 |
| Initial Bse: | 0 | 430 | 244 | 458 | 393 | 0 | 467 | 5 | 112 | 0 | 0 | 0 |
| Added Vol: | 0 | 0 | 0 | 0 | 0 | 0 | 0 | 0 | 0 | 0 | 0 | 0 |
| PasserByVol: | 0 | 0 | 0 | 0 | 0 | 0 | 0 | 0 | 0 | 0 | 0 | 0 |
| Initial Fut: | 0 | 430 | 244 | 458 | 393 | 0 | 467 | 5 | 112 | 0 | 0 | 0 |
| User Adj: | 1.00 | 1.00 | 1.00 | 1.00 | 1.00 | 1.00 | 1.00 | 1.00 | 1.00 | 1.00 | 1.00 | 1.00 |
| PHF Adj: | 1.00 | 1.00 | 1.00 | 1.00 | 1.00 | 1.00 | 1.00 | 1.00 | 1.00 | 1.00 | 1.00 | 1.00 |
| PHF Volume: | 0 | 430 | 244 | 458 | 393 | 0 | 467 | 5 | 112 | 0 | 0 | 0 |
| Reduct Vol: | 0 | 0 | 0 | 0 | 0 | 0 | 0 | 0 | 0 | 0 | 0 | 0 |
| Reduced Vol: | 0 | 430 | 244 | 458 | 393 | 0 | 467 | 5 | 112 | 0 | 0 | 0 |
| PCE Adj: | 1.00 | 1.00 | 1.00 | 1.00 | 1.00 | 1.00 | 1.00 | 1.00 | 1.00 | 1.00 | 1.00 | 1.00 |
| MLF Adj: | 1.00 | 1.00 | 1.00 | 1.00 | 1.00 | 1.00 | 1.00 | 1.00 | 1.00 | 1.00 | 1.00 | 1.00 |
| FinalVolume: | 0 | 430 | 244 | 458 | 393 | 0 | 467 | 5 | 112 | 0 | 0 | 0 |
| Saturation Flow Module: | | | | | | | | | | | | |
| Sat/Lane: | 1600 | 1600 | 1600 | 1600 | 1600 | 1600 | 1600 | 1600 | 1600 | 1600 | 1600 | 1600 |
| Adjustment: | 1.00 | 1.00 | 1.00 | 0.80 | 1.00 | 1.00 | 0.80 | 1.00 | 1.00 | 1.00 | 1.00 | 1.00 |
| Lanes: | 0.00 | 2.00 | 1.00 | 2.00 | 1.00 | 0.00 | 1.98 | 0.02 | 1.00 | 0.00 | 0.00 | 0.00 |
| Final Sat.: | 0 | 3200 | 1600 | 2560 | 1600 | 0 | 2532 | 35 | 1600 | 0 | 0 | 0 |
| Capacity Analysis Module: | | | | | | | | | | | | |
| Vol/Sat: | 0.00 | 0.13 | 0.15 | 0.18 | 0.25 | 0.00 | 0.18 | 0.15 | 0.07 | 0.00 | 0.00 | 0.00 |
| Crit Moves: | | | **** | **** | | | **** | | | | | |

Valle Verde Home Project
Existing + Ambient
AM Peak Hour

Scenario Report

| | |
|---|---|
| Scenario: | E+A AM |
| Command: | E+A AM |
| Volume: | E+A AM |
| Geometry: | Existing |
| Impact Fee: | Default Impact Fee |
| Trip Generation: | none |
| Trip Distribution: | none |
| Paths: | Default Path |
| Routes: | Default Route |
| Configuration: | E+A AM |

Valle Verde Home Project
Existing + Ambient
AM Peak Hour

Turning Movement Report
none

| Volume | Northbound | | | Southbound | | | Eastbound | | | Westbound | | | Total |
|---|---|---|---|---|---|---|---|---|---|---|---|---|---|
| Type | Left | Thru | Right | Left | Thru | Right | Left | Thru | Right | Left | Thru | Right | Volume |
| #6 Calle de los Amigos at Modoc Rd | | | | | | | | | | | | | |
| Base | 98 | 0 | 46 | 0 | 0 | 0 | 0 | 198 | 53 | 19 | 312 | 0 | 726 |
| Added | 0 | 0 | 0 | 0 | 0 | 0 | 0 | 0 | 0 | 0 | 0 | 0 | 0 |
| Total | 98 | 0 | 46 | 0 | 0 | 0 | 0 | 198 | 53 | 19 | 312 | 0 | 726 |
| #7 Via Senda at Modoc Rd | | | | | | | | | | | | | |
| Base | 38 | 0 | 139 | 0 | 0 | 0 | 0 | 118 | 96 | 179 | 134 | 0 | 703 |
| Added | 0 | 0 | 0 | 0 | 0 | 0 | 0 | 0 | 0 | 0 | 0 | 0 | 0 |
| Total | 38 | 0 | 139 | 0 | 0 | 0 | 0 | 118 | 96 | 179 | 134 | 0 | 703 |
| #8 Via Senda at Las Palmas Dr | | | | | | | | | | | | | |
| Base | 0 | 0 | 0 | 242 | 0 | 35 | 27 | 289 | 0 | 0 | 344 | 149 | 1084 |
| Added | 0 | 0 | 0 | 0 | 0 | 0 | 0 | 0 | 0 | 0 | 0 | 0 | 0 |
| Total | 0 | 0 | 0 | 242 | 0 | 35 | 27 | 289 | 0 | 0 | 344 | 149 | 1084 |
| #9 Las Palmas/S La Cumbre Rd at US-101 SB Ramps | | | | | | | | | | | | | |
| Base | 0 | 430 | 244 | 458 | 393 | 0 | 467 | 5 | 112 | 0 | 0 | 0 | 2109 |
| Added | 0 | 0 | 0 | 0 | 0 | 0 | 0 | 0 | 0 | 0 | 0 | 0 | 0 |
| Total | 0 | 430 | 244 | 458 | 393 | 0 | 467 | 5 | 112 | 0 | 0 | 0 | 2109 |

Valle Verde Home Project
Existing + Ambient
AM Peak Hour

Impact Analysis Report
Level Of Service

| Intersection | Base LOS | Base Del/ Veh | Base V/ C | Future LOS | Future Del/ Veh | Future V/ C | Change in |
|---|---|---|---|---|---|---|---|
| # 6 Calle de los Amigos at Modoc R | B | 12.9 | 0.000 | B | 12.9 | 0.000 | + 0.000 D/V |
| # 7 Via Senda at Modoc Rd | A | 9.7 | 0.415 | A | 9.7 | 0.415 | + 0.000 V/C |
| # 8 Via Senda at Las Palmas Dr | B | 13.2 | 0.554 | B | 13.2 | 0.554 | + 0.000 V/C |
| # 9 Las Palmas/S La Cumbre Rd at | C | 26.2 | 0.545 | C | 26.2 | 0.545 | + 0.000 D/V |

Traffix 7.9.0215 (c) 2008 Dowling Assoc. Licensed to MMA, LONG BEACH, CA

Valle Verde Home Project
Existing + Ambient
AM Peak Hour

Level Of Service Computation Report
2000 HCM Unsignalized Method (Future Volume Alternative)

Intersection #6 Calle de los Amigos at Modoc Rd

Average Delay (sec/veh): 2.8 Worst Case Level Of Service: B[ 12.9]

| Street Name: | Calle de los Amigos | | | | | | | | | Modoc Rd | | | | | | | | |
|---|---|---|---|---|---|---|---|---|---|---|---|---|---|---|---|---|---|---|
| Approach: | North Bound | | | | | South Bound | | | | East Bound | | | | | West Bound | | | |
| Movement: | L | - | T | - | R | L | - | T | - | R | L | - | T | - | R | L | - | T | - | R |
| Control: | Stop Sign | | | | | Stop Sign | | | | | Uncontrolled | | | | | Uncontrolled | | | | |
| Rights: | Include | | | | | Include | | | | | Include | | | | | Include | | | | |
| Lanes: | 1 | 0 | 0 | 0 | 1 | 0 | 0 | 0 | 0 | 0 | 0 | 0 | 0 | 1 | 0 | 1 | 0 | 1 | 0 | 0 |
| Volume Module: | | | | | | | | | | | | | | | | | | | | |
| Base Vol: | 96 | | 0 | | 45 | 0 | | 0 | | 0 | 0 | | 194 | | 52 | 19 | | 306 | | 0 |
| Growth Adj: | 1.02 | 1.02 | | 1.02 | | 1.02 | 1.02 | | 1.02 | | 1.02 | 1.02 | | 1.02 | | 1.02 | 1.02 | | 1.02 | |
| Initial Bse: | 98 | | 0 | | 46 | 0 | | 0 | | 0 | 0 | | 198 | | 53 | 19 | | 312 | | 0 |
| Added Vol: | 0 | | 0 | | 0 | 0 | | 0 | | 0 | 0 | | 0 | | 0 | 0 | | 0 | | 0 |
| PasserByVol: | 0 | | 0 | | 0 | 0 | | 0 | | 0 | 0 | | 0 | | 0 | 0 | | 0 | | 0 |
| Initial Fut: | 98 | | 0 | | 46 | 0 | | 0 | | 0 | 0 | | 198 | | 53 | 19 | | 312 | | 0 |
| User Adj: | 1.00 | 1.00 | | 1.00 | | 1.00 | 1.00 | | 1.00 | | 1.00 | 1.00 | | 1.00 | | 1.00 | 1.00 | | 1.00 | |
| PHF Adj: | 1.00 | 1.00 | | 1.00 | | 1.00 | 1.00 | | 1.00 | | 1.00 | 1.00 | | 1.00 | | 1.00 | 1.00 | | 1.00 | |
| PHF Volume: | 98 | | 0 | | 46 | 0 | | 0 | | 0 | 0 | | 198 | | 53 | 19 | | 312 | | 0 |
| Reduct Vol: | 0 | | 0 | | 0 | 0 | | 0 | | 0 | 0 | | 0 | | 0 | 0 | | 0 | | 0 |
| FinalVolume: | 98 | | 0 | | 46 | 0 | | 0 | | 0 | 0 | | 198 | | 53 | 19 | | 312 | | 0 |
| Critical Gap Module: | | | | | | | | | | | | | | | | | | | | |
| Critical Gp: | 6.4 | xxxx | | 6.2 | xxxxx | xxxx | xxxxx | xxxxx | xxxx | xxxxx | | 4.1 | xxxx | xxxxx | | | | | | |
| FollowUpTim: | 3.5 | xxxx | | 3.3 | xxxxx | xxxx | xxxxx | xxxxx | xxxx | xxxxx | | 2.2 | xxxx | xxxxx | | | | | | |
| Capacity Module: | | | | | | | | | | | | | | | | | | | | |
| Cnflict Vol: | 575 | xxxx | | 224 | xxxx | xxxx | xxxxx | xxxx | xxxx | xxxxx | | 251 | xxxx | xxxxx | | | | | | |
| Potent Cap.: | 483 | xxxx | | 820 | xxxx | xxxx | xxxxx | xxxx | xxxx | xxxxx | | 1326 | xxxx | xxxxx | | | | | | |
| Move Cap.: | 478 | xxxx | | 820 | xxxx | xxxx | xxxxx | xxxx | xxxx | xxxxx | | 1326 | xxxx | xxxxx | | | | | | |
| Volume/Cap: | 0.21 | xxxx | | 0.06 | xxxx | xxxx | xxxx | xxxx | xxxx | xxxx | | 0.01 | xxxx | xxxx | | | | | | |
| Level Of Service Module: | | | | | | | | | | | | | | | | | | | | |
| 2Way95thQ: | 0.8 | xxxx | | 0.2 | xxxx | xxxx | xxxxx | xxxx | xxxx | xxxxx | | 0.0 | xxxx | xxxxx | | | | | | |
| Control Del: | 14.5 | xxxx | | 9.6 | xxxxx | xxxx | xxxxx | xxxxx | xxxx | xxxxx | | 7.8 | xxxx | xxxxx | | | | | | |
| LOS by Move: | B | * | | A | * | * | * | * | * | * | | A | * | * | | | | | | |
| Movement: | LT | - | LTR | - | RT | LT | - | LTR | - | RT | LT | - | LTR | - | RT | LT | - | LTR | - | RT |
| Shared Cap.: | xxxx | xxxx | | xxxxx | | xxxx | xxxx | xxxxx | | | xxxx | xxxx | xxxxx | | | xxxx | xxxx | xxxxx | | |
| SharedQueue: | xxxxx | xxxx | | xxxxx | | xxxxx | xxxx | xxxxx | | | xxxxx | xxxx | xxxxx | | | xxxxx | xxxx | xxxxx | | |
| Shrd ConDel: | xxxxx | xxxx | | xxxxx | | xxxxx | xxxx | xxxxx | | | xxxxx | xxxx | xxxxx | | | xxxxx | xxxx | xxxxx | | |
| Shared LOS: | * | * | | * | | * | * | * | | | * | * | * | | | * | * | * | | |
| ApproachDel: | | | 12.9 | | | | | xxxxxx | | | | | xxxxxx | | | | | xxxxxx | | |
| ApproachLOS: | | | B | | | | | * | | | | | * | | | | | * | | |

Note: Queue reported is the number of cars per lane.

Traffix 7.9.0215 (c) 2008 Dowling Assoc. Licensed to MMA, LONG BEACH, CA

Valle Verde Home Project
Existing + Ambient
AM Peak Hour

Level Of Service Computation Report
2000 HCM 4-Way Stop Method (Future Volume Alternative)

Intersection #7 Via Senda at Modoc Rd

Cycle (sec): 100 Critical Vol./Cap.(X): 0.415
Loss Time (sec): 0 (Y+R=4.0 sec) Average Delay (sec/veh): 9.7
Optimal Cycle: 0 Level Of Service: A

| Street Name: | Via Senda | | | | | | Modoc Rd | | | | | |
|---|---|---|---|---|---|---|---|---|---|---|---|---|
| Approach: | North Bound | | | South Bound | | | East Bound | | | West Bound | | |
| Movement: | L - | T - | R | L - | T - | R | L - | T - | R | L - | T - | R |
| Control: | Stop Sign | | | Stop Sign | | | Stop Sign | | | Stop Sign | | |
| Rights: | Include | | | Include | | | Include | | | Include | | |
| Min. Green: | 0 | 0 | 0 | 0 | 0 | 0 | 0 | 0 | 0 | 0 | 0 | 0 |
| Lanes: | 0 0 | 1! 0 | 0 | 0 0 | 0 0 | 0 | 0 0 | 0 1 | 0 | 0 1 | 0 0 | 0 |
| Volume Module: | | | | | | | | | | | | |
| Base Vol: | 37 | 0 | 136 | 0 | 0 | 0 | 0 | 116 | 94 | 175 | 131 | 0 |
| Growth Adj: | 1.02 | 1.02 | 1.02 | 1.02 | 1.02 | 1.02 | 1.02 | 1.02 | 1.02 | 1.02 | 1.02 | 1.02 |
| Initial Bse: | 38 | 0 | 139 | 0 | 0 | 0 | 0 | 118 | 96 | 179 | 134 | 0 |
| Added Vol: | 0 | 0 | 0 | 0 | 0 | 0 | 0 | 0 | 0 | 0 | 0 | 0 |
| PasserByVol: | 0 | 0 | 0 | 0 | 0 | 0 | 0 | 0 | 0 | 0 | 0 | 0 |
| Initial Fut: | 38 | 0 | 139 | 0 | 0 | 0 | 0 | 118 | 96 | 179 | 134 | 0 |
| User Adj: | 1.00 | 1.00 | 1.00 | 1.00 | 1.00 | 1.00 | 1.00 | 1.00 | 1.00 | 1.00 | 1.00 | 1.00 |
| PHF Adj: | 1.00 | 1.00 | 1.00 | 1.00 | 1.00 | 1.00 | 1.00 | 1.00 | 1.00 | 1.00 | 1.00 | 1.00 |
| PHF Volume: | 38 | 0 | 139 | 0 | 0 | 0 | 0 | 118 | 96 | 179 | 134 | 0 |
| Reduct Vol: | 0 | 0 | 0 | 0 | 0 | 0 | 0 | 0 | 0 | 0 | 0 | 0 |
| Reduced Vol: | 38 | 0 | 139 | 0 | 0 | 0 | 0 | 118 | 96 | 179 | 134 | 0 |
| PCE Adj: | 1.00 | 1.00 | 1.00 | 1.00 | 1.00 | 1.00 | 1.00 | 1.00 | 1.00 | 1.00 | 1.00 | 1.00 |
| MLF Adj: | 1.00 | 1.00 | 1.00 | 1.00 | 1.00 | 1.00 | 1.00 | 1.00 | 1.00 | 1.00 | 1.00 | 1.00 |
| FinalVolume: | 38 | 0 | 139 | 0 | 0 | 0 | 0 | 118 | 96 | 179 | 134 | 0 |
| Saturation Flow Module: | | | | | | | | | | | | |
| Adjustment: | 1.00 | 1.00 | 1.00 | 1.00 | 1.00 | 1.00 | 1.00 | 1.00 | 1.00 | 1.00 | 1.00 | 1.00 |
| Lanes: | 0.21 | 0.00 | 0.79 | 0.00 | 0.00 | 0.00 | 0.00 | 0.55 | 0.45 | 0.57 | 0.43 | 0.00 |
| Final Sat.: | 155 | 0 | 571 | 0 | 0 | 0 | 0 | 436 | 353 | 430 | 322 | 0 |
| Capacity Analysis Module: | | | | | | | | | | | | |
| Vol/Sat: | 0.24 | xxxx | 0.24 | xxxx | xxxx | xxxx | xxxx | 0.27 | 0.27 | 0.41 | 0.41 | xxxx |
| Crit Moves: | **** | | | | | | | **** | | | **** | |
| Delay/Veh: | 8.9 | 0.0 | 8.9 | 0.0 | 0.0 | 0.0 | 0.0 | 8.9 | 8.9 | 10.8 | 10.8 | 0.0 |
| Delay Adj: | 1.00 | 1.00 | 1.00 | 1.00 | 1.00 | 1.00 | 1.00 | 1.00 | 1.00 | 1.00 | 1.00 | 1.00 |
| AdjDel/Veh: | 8.9 | 0.0 | 8.9 | 0.0 | 0.0 | 0.0 | 0.0 | 8.9 | 8.9 | 10.8 | 10.8 | 0.0 |
| LOS by Move: | A | * | A | * | * | * | * | A | A | B | B | * |
| ApproachDel: | 8.9 | | | xxxxxx | | | | 8.9 | | | 10.8 | |
| Delay Adj: | 1.00 | | | xxxxx | | | | 1.00 | | | 1.00 | |
| ApprAdjDel: | 8.9 | | | xxxxxx | | | | 8.9 | | | 10.8 | |
| LOS by Appr: | A | | | * | | | | A | | | B | |
| AllWayAvgQ: | 0.3 | 0.3 | 0.3 | 0.0 | 0.0 | 0.0 | 0.3 | 0.3 | 0.3 | 0.7 | 0.7 | 0.7 |

Valle Verde Home Project
Existing + Ambient
AM Peak Hour

Level Of Service Computation Report
2000 HCM 4-Way Stop Method (Future Volume Alternative)

Intersection #8 Via Senda at Las Palmas Dr

Cycle (sec): 100 Critical Vol./Cap.(X): 0.554
Loss Time (sec): 0 (Y+R=4.0 sec) Average Delay (sec/veh): 13.2
Optimal Cycle: 0 Level Of Service: B

| Street Name: | Via Senda | | | | | | Las Palmas Dr | | | | | |
|---|---|---|---|---|---|---|---|---|---|---|---|---|
| Approach: | North Bound | | | South Bound | | | East Bound | | | West Bound | | |
| Movement: | L - | T - | R | L - | T - | R | L - | T - | R | L - | T - | R |
| Control: | Stop Sign | | | Stop Sign | | | Stop Sign | | | Stop Sign | | |
| Rights: | Include | | | Include | | | Include | | | Include | | |
| Min. Green: | 0 | 0 | 0 | 0 | 0 | 0 | 0 | 0 | 0 | 0 | 0 | 0 |
| Lanes: | 0 0 | 0 0 | 0 | 0 0 | 1! 0 | 0 | 0 1 | 0 0 | 0 | 0 0 | 1 0 | 1 |
| Volume Module: | | | | | | | | | | | | |
| Base Vol: | 0 | 0 | 0 | 237 | 0 | 34 | 26 | 283 | 0 | 0 | 337 | 146 |
| Growth Adj: | 1.02 | 1.02 | 1.02 | 1.02 | 1.02 | 1.02 | 1.02 | 1.02 | 1.02 | 1.02 | 1.02 | 1.02 |
| Initial Bse: | 0 | 0 | 0 | 242 | 0 | 35 | 27 | 289 | 0 | 0 | 344 | 149 |
| Added Vol: | 0 | 0 | 0 | 0 | 0 | 0 | 0 | 0 | 0 | 0 | 0 | 0 |
| PasserByVol: | 0 | 0 | 0 | 0 | 0 | 0 | 0 | 0 | 0 | 0 | 0 | 0 |
| Initial Fut: | 0 | 0 | 0 | 242 | 0 | 35 | 27 | 289 | 0 | 0 | 344 | 149 |
| User Adj: | 1.00 | 1.00 | 1.00 | 1.00 | 1.00 | 1.00 | 1.00 | 1.00 | 1.00 | 1.00 | 1.00 | 1.00 |
| PHF Adj: | 1.00 | 1.00 | 1.00 | 1.00 | 1.00 | 1.00 | 1.00 | 1.00 | 1.00 | 1.00 | 1.00 | 1.00 |
| PHF Volume: | 0 | 0 | 0 | 242 | 0 | 35 | 27 | 289 | 0 | 0 | 344 | 149 |
| Reduct Vol: | 0 | 0 | 0 | 0 | 0 | 0 | 0 | 0 | 0 | 0 | 0 | 0 |
| Reduced Vol: | 0 | 0 | 0 | 242 | 0 | 35 | 27 | 289 | 0 | 0 | 344 | 149 |
| PCE Adj: | 1.00 | 1.00 | 1.00 | 1.00 | 1.00 | 1.00 | 1.00 | 1.00 | 1.00 | 1.00 | 1.00 | 1.00 |
| MLF Adj: | 1.00 | 1.00 | 1.00 | 1.00 | 1.00 | 1.00 | 1.00 | 1.00 | 1.00 | 1.00 | 1.00 | 1.00 |
| FinalVolume: | 0 | 0 | 0 | 242 | 0 | 35 | 27 | 289 | 0 | 0 | 344 | 149 |
| Saturation Flow Module: | | | | | | | | | | | | |
| Adjustment: | 1.00 | 1.00 | 1.00 | 1.00 | 1.00 | 1.00 | 1.00 | 1.00 | 1.00 | 1.00 | 1.00 | 1.00 |
| Lanes: | 0.00 | 0.00 | 0.00 | 0.87 | 0.00 | 0.13 | 0.08 | 0.92 | 0.00 | 0.00 | 1.00 | 1.00 |
| Final Sat.: | 0 | 0 | 0 | 518 | 0 | 74 | 54 | 590 | 0 | 0 | 620 | 705 |
| Capacity Analysis Module: | | | | | | | | | | | | |
| Vol/Sat: | xxxx | xxxx | xxxx | 0.47 | xxxx | 0.47 | 0.49 | 0.49 | xxxx | xxxx | 0.55 | 0.21 |
| Crit Moves: | | | | **** | | | | **** | | | **** | |
| Delay/Veh: | 0.0 | 0.0 | 0.0 | 13.3 | 0.0 | 13.3 | 13.2 | 13.2 | 0.0 | 0.0 | 14.9 | 9.0 |
| Delay Adj: | 1.00 | 1.00 | 1.00 | 1.00 | 1.00 | 1.00 | 1.00 | 1.00 | 1.00 | 1.00 | 1.00 | 1.00 |
| AdjDel/Veh: | 0.0 | 0.0 | 0.0 | 13.3 | 0.0 | 13.3 | 13.2 | 13.2 | 0.0 | 0.0 | 14.9 | 9.0 |
| LOS by Move: | * | * | * | B | * | B | B | B | * | * | B | A |
| ApproachDel: | xxxxxx | | | 13.3 | | | 13.2 | | | 13.1 | | |
| Delay Adj: | xxxxx | | | 1.00 | | | 1.00 | | | 1.00 | | |
| ApprAdjDel: | xxxxxx | | | 13.3 | | | 13.2 | | | 13.1 | | |
| LOS by Appr: | * | | | B | | | B | | | B | | |
| AllWayAvgQ: | 0.0 | 0.0 | 0.0 | 0.7 | 0.7 | 0.7 | 0.9 | 0.9 | 0.9 | 0.0 | 1.1 | 0.3 |

Valle Verde Home Project
Existing + Ambient
AM Peak Hour

Level Of Service Computation Report
2000 HCM Operations Method (Future Volume Alternative)

Intersection #9 Las Palmas/S La Cumbre Rd at US-101 SB Ramps

| | | | |
|---|---|---|---|
| Cycle (sec): | 100 | Critical Vol./Cap.(X): | 0.545 |
| Loss Time (sec): | 10 (Y+R=4.0 sec) | Average Delay (sec/veh): | 26.2 |
| Optimal Cycle: | 39 | Level Of Service: | C |

| Approach: | North Bound | | | South Bound | | | East Bound | | | West Bound | | |
|---|---|---|---|---|---|---|---|---|---|---|---|---|
| Movement: | L - | T - | R | L - | T - | R | L - | T - | R | L - | T - | R |
| Control: | Protected | | | Protected | | | Protected | | | Protected | | |
| Rights: | Include | | | Include | | | Include | | | Include | | |
| Min. Green: | 0 | 0 | 0 | 0 | 0 | 0 | 0 | 0 | 0 | 0 | 0 | 0 |
| Lanes: | 0 0 | 2 0 | 1 | 2 0 | 1 0 | 0 | 1 1 | 0 0 | 1 | 0 0 | 0 0 | 0 |
| Volume Module: | | | | | | | | | | | | |
| Base Vol: | 0 | 422 | 239 | 449 | 385 | 0 | 458 | 5 | 110 | 0 | 0 | 0 |
| Growth Adj: | 1.02 | 1.02 | 1.02 | 1.02 | 1.02 | 1.02 | 1.02 | 1.02 | 1.02 | 1.02 | 1.02 | 1.02 |
| Initial Bse: | 0 | 430 | 244 | 458 | 393 | 0 | 467 | 5 | 112 | 0 | 0 | 0 |
| Added Vol: | 0 | 0 | 0 | 0 | 0 | 0 | 0 | 0 | 0 | 0 | 0 | 0 |
| PasserByVol: | 0 | 0 | 0 | 0 | 0 | 0 | 0 | 0 | 0 | 0 | 0 | 0 |
| Initial Fut: | 0 | 430 | 244 | 458 | 393 | 0 | 467 | 5 | 112 | 0 | 0 | 0 |
| User Adj: | 1.00 | 1.00 | 1.00 | 1.00 | 1.00 | 1.00 | 1.00 | 1.00 | 1.00 | 1.00 | 1.00 | 1.00 |
| PHF Adj: | 1.00 | 1.00 | 1.00 | 1.00 | 1.00 | 1.00 | 1.00 | 1.00 | 1.00 | 1.00 | 1.00 | 1.00 |
| PHF Volume: | 0 | 430 | 244 | 458 | 393 | 0 | 467 | 5 | 112 | 0 | 0 | 0 |
| Reduct Vol: | 0 | 0 | 0 | 0 | 0 | 0 | 0 | 0 | 0 | 0 | 0 | 0 |
| Reduced Vol: | 0 | 430 | 244 | 458 | 393 | 0 | 467 | 5 | 112 | 0 | 0 | 0 |
| PCE Adj: | 1.00 | 1.00 | 1.00 | 1.00 | 1.00 | 1.00 | 1.00 | 1.00 | 1.00 | 1.00 | 1.00 | 1.00 |
| MLF Adj: | 1.00 | 1.00 | 1.00 | 1.00 | 1.00 | 1.00 | 1.00 | 1.00 | 1.00 | 1.00 | 1.00 | 1.00 |
| FinalVolume: | 0 | 430 | 244 | 458 | 393 | 0 | 467 | 5 | 112 | 0 | 0 | 0 |
| Saturation Flow Module: | | | | | | | | | | | | |
| Sat/Lane: | 1900 | 1900 | 1900 | 1900 | 1900 | 1900 | 1900 | 1900 | 1900 | 1900 | 1900 | 1900 |
| Adjustment: | 1.00 | 0.95 | 0.85 | 0.74 | 1.00 | 1.00 | 0.70 | 0.88 | 0.85 | 1.00 | 1.00 | 1.00 |
| Lanes: | 0.00 | 2.00 | 1.00 | 2.00 | 1.00 | 0.00 | 1.98 | 0.02 | 1.00 | 0.00 | 0.00 | 0.00 |
| Final Sat.: | 0 | 3610 | 1615 | 2801 | 1900 | 0 | 2652 | 29 | 1615 | 0 | 0 | 0 |
| Capacity Analysis Module: | | | | | | | | | | | | |
| Vol/Sat: | 0.00 | 0.12 | 0.15 | 0.16 | 0.21 | 0.00 | 0.18 | 0.18 | 0.07 | 0.00 | 0.00 | 0.00 |
| Crit Moves: | | | **** | **** | | | **** | | | | | |
| Green/Cycle: | 0.00 | 0.28 | 0.28 | 0.30 | 0.58 | 0.00 | 0.32 | 0.32 | 0.32 | 0.00 | 0.00 | 0.00 |
| Volume/Cap: | 0.00 | 0.43 | 0.55 | 0.55 | 0.36 | 0.00 | 0.55 | 0.55 | 0.21 | 0.00 | 0.00 | 0.00 |
| Delay/Veh: | 0.0 | 30.0 | 32.2 | 30.0 | 11.5 | 0.0 | 28.5 | 28.5 | 24.8 | 0.0 | 0.0 | 0.0 |
| User DelAdj: | 1.00 | 1.00 | 1.00 | 1.00 | 1.00 | 1.00 | 1.00 | 1.00 | 1.00 | 1.00 | 1.00 | 1.00 |
| AdjDel/Veh: | 0.0 | 30.0 | 32.2 | 30.0 | 11.5 | 0.0 | 28.5 | 28.5 | 24.8 | 0.0 | 0.0 | 0.0 |
| LOS by Move: | A | C | C | C | B | A | C | C | C | A | A | A |
| HCM2kAvgQ: | 0 | 6 | 7 | 7 | 6 | 0 | 7 | 8 | 3 | 0 | 0 | 0 |

Note: Queue reported is the number of cars per lane.

Traffix 7.9.0215 (c) 2008 Dowling Assoc. Licensed to MMA, LONG BEACH, CA

# FUTURE WITHOUT PROJECT
# LOS WORKSHEETS

# WEEKDAY PM PEAK HOUR

Valle Verde Home Project
Existing + Ambient
PM Peak Hour

Scenario Report

| | |
|---|---|
| Scenario: | E+A PM |
| Command: | E+A PM |
| Volume: | E+A PM |
| Geometry: | Existing |
| Impact Fee: | Default Impact Fee |
| Trip Generation: | none |
| Trip Distribution: | none |
| Paths: | Default Path |
| Routes: | Default Route |
| Configuration: | E+A PM |

Valle Verde Home Project
Existing + Ambient
PM Peak Hour

Turning Movement Report
none

| Volume | Northbound | | | Southbound | | | Eastbound | | | Westbound | | | Total |
|---|---|---|---|---|---|---|---|---|---|---|---|---|---|
| Type | Left | Thru | Right | Left | Thru | Right | Left | Thru | Right | Left | Thru | Right | Volume |
| #6 Calle de los Amigos at Modoc Rd | | | | | | | | | | | | | |
| Base | 71 | 0 | 36 | 0 | 0 | 0 | 0 | 335 | 111 | 49 | 281 | 0 | 882 |
| Added | 0 | 0 | 0 | 0 | 0 | 0 | 0 | 0 | 0 | 0 | 0 | 0 | 0 |
| Total | 71 | 0 | 36 | 0 | 0 | 0 | 0 | 335 | 111 | 49 | 281 | 0 | 882 |
| #7 Via Senda at Modoc Rd | | | | | | | | | | | | | |
| Base | 100 | 0 | 210 | 0 | 0 | 0 | 0 | 192 | 71 | 181 | 183 | 0 | 936 |
| Added | 0 | 0 | 0 | 0 | 0 | 0 | 0 | 0 | 0 | 0 | 0 | 0 | 0 |
| Total | 100 | 0 | 210 | 0 | 0 | 0 | 0 | 192 | 71 | 181 | 183 | 0 | 936 |
| #8 Via Senda at Las Palmas Dr | | | | | | | | | | | | | |
| Base | 0 | 0 | 0 | 231 | 0 | 28 | 28 | 279 | 0 | 0 | 276 | 275 | 1117 |
| Added | 0 | 0 | 0 | 0 | 0 | 0 | 0 | 0 | 0 | 0 | 0 | 0 | 0 |
| Total | 0 | 0 | 0 | 231 | 0 | 28 | 28 | 279 | 0 | 0 | 276 | 275 | 1117 |
| #9 Las Palmas/S La Cumbre Rd at US-101 SB Ramps | | | | | | | | | | | | | |
| Base | 0 | 320 | 147 | 611 | 393 | 0 | 616 | 1 | 77 | 0 | 0 | 0 | 2164 |
| Added | 0 | 0 | 0 | 0 | 0 | 0 | 0 | 0 | 0 | 0 | 0 | 0 | 0 |
| Total | 0 | 320 | 147 | 611 | 393 | 0 | 616 | 1 | 77 | 0 | 0 | 0 | 2164 |

Valle Verde Home Project
Existing + Ambient
PM Peak Hour

Impact Analysis Report
Level Of Service

| Intersection | Base LOS | Base Del/ Veh | Base V/ C | Future LOS | Future Del/ Veh | Future V/ C | Change in |
|---|---|---|---|---|---|---|---|
| # 6 Calle de los Amigos at Modoc R | C | 15.2 | 0.000 | C | 15.2 | 0.000 | + 0.000 D/V |
| # 7 Via Senda at Modoc Rd | B | 12.2 | 0.535 | B | 12.2 | 0.535 | + 0.000 V/C |
| # 8 Via Senda at Las Palmas Dr | B | 12.2 | 0.471 | B | 12.2 | 0.471 | + 0.000 V/C |
| # 9 Las Palmas/S La Cumbre Rd at | B | xxxxx | 0.680 | B | xxxxx | 0.680 | + 0.000 V/C |

Valle Verde Home Project
Existing + Ambient
PM Peak Hour

Level Of Service Computation Report
2000 HCM Unsignalized Method (Future Volume Alternative)

Intersection #6 Calle de los Amigos at Modoc Rd

Average Crit Del (sec/veh): 2.3 Worst Case Level Of Service: C[ 15.2]

| Street Name: | Calle de los Amigos | | | | | | | | | Modoc Rd | | | | | | | | |
|---|---|---|---|---|---|---|---|---|---|---|---|---|---|---|---|---|---|---|
| Approach: | North Bound | | | | | South Bound | | | | East Bound | | | | | West Bound | | | |
| Movement: | L | - | T | - | R | L | - | T | - | R | L | - | T | - | R | L | - | T | - | R |
| Control: | Stop Sign | | | | | Stop Sign | | | | | Uncontrolled | | | | | Uncontrolled | | | | |
| Rights: | Include | | | | | Include | | | | | Include | | | | | Include | | | | |
| Lanes: | 1 | 0 | 0 | 0 | 1 | 0 | 0 | 0 | 0 | 0 | 0 | 0 | 0 | 1 | 0 | 1 | 0 | 1 | 0 | 0 |
| Volume Module: | | | | | | | | | | | | | | | | | | | | |
| Base Vol: | 70 | | 0 | | 35 | 0 | | 0 | | 0 | 0 | | 328 | | 109 | 48 | | 275 | | 0 |
| Growth Adj: | 1.02 | 1.02 | | 1.02 | | 1.02 | 1.02 | | 1.02 | | 1.02 | 1.02 | | 1.02 | | 1.02 | 1.02 | | 1.02 | |
| Initial Bse: | 71 | | 0 | | 36 | 0 | | 0 | | 0 | 0 | | 335 | | 111 | 49 | | 281 | | 0 |
| Added Vol: | 0 | | 0 | | 0 | 0 | | 0 | | 0 | 0 | | 0 | | 0 | 0 | | 0 | | 0 |
| PasserByVol: | 0 | | 0 | | 0 | 0 | | 0 | | 0 | 0 | | 0 | | 0 | 0 | | 0 | | 0 |
| Initial Fut: | 71 | | 0 | | 36 | 0 | | 0 | | 0 | 0 | | 335 | | 111 | 49 | | 281 | | 0 |
| User Adj: | 1.00 | 1.00 | | 1.00 | | 1.00 | 1.00 | | 1.00 | | 1.00 | 1.00 | | 1.00 | | 1.00 | 1.00 | | 1.00 | |
| PHF Adj: | 1.00 | 1.00 | | 1.00 | | 1.00 | 1.00 | | 1.00 | | 1.00 | 1.00 | | 1.00 | | 1.00 | 1.00 | | 1.00 | |
| PHF Volume: | 71 | | 0 | | 36 | 0 | | 0 | | 0 | 0 | | 335 | | 111 | 49 | | 281 | | 0 |
| Reduct Vol: | 0 | | 0 | | 0 | 0 | | 0 | | 0 | 0 | | 0 | | 0 | 0 | | 0 | | 0 |
| FinalVolume: | 71 | | 0 | | 36 | 0 | | 0 | | 0 | 0 | | 335 | | 111 | 49 | | 281 | | 0 |
| Critical Gap Module: | | | | | | | | | | | | | | | | | | | | |
| Critical Gp: | 6.4 | xxxx | | 6.2 | xxxxx | xxxx | xxxxx | xxxxx | xxxx | xxxxx | | | | | | 4.1 | xxxx | xxxxx | | |
| FollowUpTim: | 3.5 | xxxx | | 3.3 | xxxxx | xxxx | xxxxx | xxxxx | xxxx | xxxxx | | | | | | 2.2 | xxxx | xxxxx | | |
| Capacity Module: | | | | | | | | | | | | | | | | | | | | |
| Cnflict Vol: | 769 | xxxx | | 390 | xxxx | xxxx | xxxxx | xxxx | xxxx | xxxxx | | | | | | 446 | xxxx | xxxxx | | |
| Potent Cap.: | 372 | xxxx | | 663 | xxxx | xxxx | xxxxx | xxxx | xxxx | xxxxx | | | | | | 1125 | xxxx | xxxxx | | |
| Move Cap.: | 360 | xxxx | | 663 | xxxx | xxxx | xxxxx | xxxx | xxxx | xxxxx | | | | | | 1125 | xxxx | xxxxx | | |
| Volume/Cap: | 0.20 | xxxx | | 0.05 | xxxx | xxxx | xxxx | xxxx | xxxx | xxxx | | | | | | 0.04 | xxxx | xxxx | | |
| Level Of Service Module: | | | | | | | | | | | | | | | | | | | | |
| 2Way95thQ: | 0.7 | xxxx | | 0.2 | xxxx | xxxx | xxxxx | xxxx | xxxx | xxxxx | | | | | | 0.1 | xxxx | xxxxx | | |
| Control Del: | 17.5 | xxxx | | 10.7 | xxxxx | xxxx | xxxxx | xxxxx | xxxx | xxxxx | | | | | | 8.3 | xxxx | xxxxx | | |
| LOS by Move: | C | * | | B | * | * | * | * | * | * | | | | | | A | * | * | | |
| Movement: | LT | - | LTR | - | RT | LT | - | LTR | - | RT | LT | - | LTR | - | RT | LT | - | LTR | - | RT |
| Shared Cap.: | xxxx | xxxx | | xxxxx | | xxxx | xxxx | | xxxxx | | xxxx | xxxx | | xxxxx | | xxxx | xxxx | | xxxxx | |
| SharedQueue: | xxxxx | xxxx | | xxxxx | | xxxxx | xxxx | | xxxxx | | xxxxx | xxxx | | xxxxx | | xxxxx | xxxx | | xxxxx | |
| Shrd ConDel: | xxxxx | xxxx | | xxxxx | | xxxxx | xxxx | | xxxxx | | xxxxx | xxxx | | xxxxx | | xxxxx | xxxx | | xxxxx | |
| Shared LOS: | * | * | | * | | * | * | | * | | * | * | | * | | * | * | | * | |
| ApproachDel: | | | 15.2 | | | | | xxxxxx | | | | | xxxxxx | | | | | xxxxxx | | |
| ApproachLOS: | | | C | | | | | * | | | | | * | | | | | * | | |

Note: Queue reported is the number of cars per lane.

Valle Verde Home Project
Existing + Ambient
PM Peak Hour

Level Of Service Computation Report
2000 HCM 4-Way Stop Method (Future Volume Alternative)

Intersection #7 Via Senda at Modoc Rd

Cycle (sec): 100 Critical Vol./Cap.(X): 0.535
Loss Time (sec): 0 (Y+R=4.0 sec) Average Delay (sec/veh): 12.2
Optimal Cycle: 0 Level Of Service: B

| Street Name: | Via Senda | | | | | | Modoc Rd | | | | | |
|---|---|---|---|---|---|---|---|---|---|---|---|---|
| Approach: | North Bound | | | South Bound | | | East Bound | | | West Bound | | |
| Movement: | L - | T - | R | L - | T - | R | L - | T - | R | L - | T - | R |
| Control: | Stop Sign | | | Stop Sign | | | Stop Sign | | | Stop Sign | | |
| Rights: | Include | | | Include | | | Include | | | Include | | |
| Min. Green: | 0 | 0 | 0 | 0 | 0 | 0 | 0 | 0 | 0 | 0 | 0 | 0 |
| Lanes: | 0 0 | 1! 0 | 0 | 0 0 | 0 0 | 0 | 0 0 | 0 1 | 0 | 0 1 | 0 0 | 0 |
| Volume Module: | | | | | | | | | | | | |
| Base Vol: | 98 | 0 | 206 | 0 | 0 | 0 | 0 | 188 | 70 | 177 | 179 | 0 |
| Growth Adj: | 1.02 | 1.02 | 1.02 | 1.02 | 1.02 | 1.02 | 1.02 | 1.02 | 1.02 | 1.02 | 1.02 | 1.02 |
| Initial Bse: | 100 | 0 | 210 | 0 | 0 | 0 | 0 | 192 | 71 | 181 | 183 | 0 |
| Added Vol: | 0 | 0 | 0 | 0 | 0 | 0 | 0 | 0 | 0 | 0 | 0 | 0 |
| PasserByVol: | 0 | 0 | 0 | 0 | 0 | 0 | 0 | 0 | 0 | 0 | 0 | 0 |
| Initial Fut: | 100 | 0 | 210 | 0 | 0 | 0 | 0 | 192 | 71 | 181 | 183 | 0 |
| User Adj: | 1.00 | 1.00 | 1.00 | 1.00 | 1.00 | 1.00 | 1.00 | 1.00 | 1.00 | 1.00 | 1.00 | 1.00 |
| PHF Adj: | 1.00 | 1.00 | 1.00 | 1.00 | 1.00 | 1.00 | 1.00 | 1.00 | 1.00 | 1.00 | 1.00 | 1.00 |
| PHF Volume: | 100 | 0 | 210 | 0 | 0 | 0 | 0 | 192 | 71 | 181 | 183 | 0 |
| Reduct Vol: | 0 | 0 | 0 | 0 | 0 | 0 | 0 | 0 | 0 | 0 | 0 | 0 |
| Reduced Vol: | 100 | 0 | 210 | 0 | 0 | 0 | 0 | 192 | 71 | 181 | 183 | 0 |
| PCE Adj: | 1.00 | 1.00 | 1.00 | 1.00 | 1.00 | 1.00 | 1.00 | 1.00 | 1.00 | 1.00 | 1.00 | 1.00 |
| MLF Adj: | 1.00 | 1.00 | 1.00 | 1.00 | 1.00 | 1.00 | 1.00 | 1.00 | 1.00 | 1.00 | 1.00 | 1.00 |
| FinalVolume: | 100 | 0 | 210 | 0 | 0 | 0 | 0 | 192 | 71 | 181 | 183 | 0 |
| Saturation Flow Module: | | | | | | | | | | | | |
| Adjustment: | 1.00 | 1.00 | 1.00 | 1.00 | 1.00 | 1.00 | 1.00 | 1.00 | 1.00 | 1.00 | 1.00 | 1.00 |
| Lanes: | 0.32 | 0.00 | 0.68 | 0.00 | 0.00 | 0.00 | 0.00 | 0.73 | 0.27 | 0.50 | 0.50 | 0.00 |
| Final Sat.: | 218 | 0 | 458 | 0 | 0 | 0 | 0 | 499 | 186 | 337 | 341 | 0 |
| Capacity Analysis Module: | | | | | | | | | | | | |
| Vol/Sat: | 0.46 | xxxx | 0.46 | xxxx | xxxx | xxxx | xxxx | 0.38 | 0.38 | 0.54 | 0.54 | xxxx |
| Crit Moves: | **** | | | | | | | **** | | | **** | |
| Delay/Veh: | 11.8 | 0.0 | 11.8 | 0.0 | 0.0 | 0.0 | 0.0 | 10.9 | 10.9 | 13.5 | 13.5 | 0.0 |
| Delay Adj: | 1.00 | 1.00 | 1.00 | 1.00 | 1.00 | 1.00 | 1.00 | 1.00 | 1.00 | 1.00 | 1.00 | 1.00 |
| AdjDel/Veh: | 11.8 | 0.0 | 11.8 | 0.0 | 0.0 | 0.0 | 0.0 | 10.9 | 10.9 | 13.5 | 13.5 | 0.0 |
| LOS by Move: | B | * | B | * | * | * | * | B | B | B | B | * |
| ApproachDel: | 11.8 | | | xxxxxx | | | 10.9 | | | 13.5 | | |
| Delay Adj: | 1.00 | | | xxxxx | | | 1.00 | | | 1.00 | | |
| ApprAdjDel: | 11.8 | | | xxxxxx | | | 10.9 | | | 13.5 | | |
| LOS by Appr: | B | | | * | | | B | | | B | | |
| AllWayAvgQ: | 0.7 | 0.7 | 0.7 | 0.0 | 0.0 | 0.0 | 0.5 | 0.5 | 0.5 | 1.0 | 1.0 | 1.0 |

Note: Queue reported is the number of cars per lane.

Traffix 7.9.0215 (c) 2008 Dowling Assoc. Licensed to MMA, LONG BEACH, CA

Valle Verde Home Project
Existing + Ambient
PM Peak Hour

Level Of Service Computation Report
2000 HCM 4-Way Stop Method (Future Volume Alternative)

Intersection #8 Via Senda at Las Palmas Dr

Cycle (sec): 100 Critical Vol./Cap.(X): 0.471
Loss Time (sec): 0 (Y+R=4.0 sec) Average Delay (sec/veh): 12.2
Optimal Cycle: 0 Level Of Service: B

| Street Name: | Via Senda | | | | | | Las Palmas Dr | | | | | |
|---|---|---|---|---|---|---|---|---|---|---|---|---|
| Approach: | North Bound | | | South Bound | | | East Bound | | | West Bound | | |
| Movement: | L - | T - | R | L - | T - | R | L - | T - | R | L - | T - | R |
| Control: | Stop Sign | | | Stop Sign | | | Stop Sign | | | Stop Sign | | |
| Rights: | Include | | | Include | | | Include | | | Include | | |
| Min. Green: | 0 | 0 | 0 | 0 | 0 | 0 | 0 | 0 | 0 | 0 | 0 | 0 |
| Lanes: | 0 0 | 0 0 | 0 | 0 0 | 1! 0 | 0 | 0 1 | 0 0 | 0 | 0 0 | 1 0 | 1 |
| Volume Module: | | | | | | | | | | | | |
| Base Vol: | 0 | 0 | 0 | 226 | 0 | 27 | 27 | 274 | 0 | 0 | 271 | 270 |
| Growth Adj: | 1.02 | 1.02 | 1.02 | 1.02 | 1.02 | 1.02 | 1.02 | 1.02 | 1.02 | 1.02 | 1.02 | 1.02 |
| Initial Bse: | 0 | 0 | 0 | 231 | 0 | 28 | 28 | 279 | 0 | 0 | 276 | 275 |
| Added Vol: | 0 | 0 | 0 | 0 | 0 | 0 | 0 | 0 | 0 | 0 | 0 | 0 |
| PasserByVol: | 0 | 0 | 0 | 0 | 0 | 0 | 0 | 0 | 0 | 0 | 0 | 0 |
| Initial Fut: | 0 | 0 | 0 | 231 | 0 | 28 | 28 | 279 | 0 | 0 | 276 | 275 |
| User Adj: | 1.00 | 1.00 | 1.00 | 1.00 | 1.00 | 1.00 | 1.00 | 1.00 | 1.00 | 1.00 | 1.00 | 1.00 |
| PHF Adj: | 1.00 | 1.00 | 1.00 | 1.00 | 1.00 | 1.00 | 1.00 | 1.00 | 1.00 | 1.00 | 1.00 | 1.00 |
| PHF Volume: | 0 | 0 | 0 | 231 | 0 | 28 | 28 | 279 | 0 | 0 | 276 | 275 |
| Reduct Vol: | 0 | 0 | 0 | 0 | 0 | 0 | 0 | 0 | 0 | 0 | 0 | 0 |
| Reduced Vol: | 0 | 0 | 0 | 231 | 0 | 28 | 28 | 279 | 0 | 0 | 276 | 275 |
| PCE Adj: | 1.00 | 1.00 | 1.00 | 1.00 | 1.00 | 1.00 | 1.00 | 1.00 | 1.00 | 1.00 | 1.00 | 1.00 |
| MLF Adj: | 1.00 | 1.00 | 1.00 | 1.00 | 1.00 | 1.00 | 1.00 | 1.00 | 1.00 | 1.00 | 1.00 | 1.00 |
| FinalVolume: | 0 | 0 | 0 | 231 | 0 | 28 | 28 | 279 | 0 | 0 | 276 | 275 |
| Saturation Flow Module: | | | | | | | | | | | | |
| Adjustment: | 1.00 | 1.00 | 1.00 | 1.00 | 1.00 | 1.00 | 1.00 | 1.00 | 1.00 | 1.00 | 1.00 | 1.00 |
| Lanes: | 0.00 | 0.00 | 0.00 | 0.89 | 0.00 | 0.11 | 0.09 | 0.91 | 0.00 | 0.00 | 1.00 | 1.00 |
| Final Sat.: | 0 | 0 | 0 | 528 | 0 | 63 | 58 | 593 | 0 | 0 | 629 | 718 |
| Capacity Analysis Module: | | | | | | | | | | | | |
| Vol/Sat: | xxxx | xxxx | xxxx | 0.44 | xxxx | 0.44 | 0.47 | 0.47 | xxxx | xxxx | 0.44 | 0.38 |
| Crit Moves: | | | | **** | | | | **** | | | **** | |
| Delay/Veh: | 0.0 | 0.0 | 0.0 | 12.8 | 0.0 | 12.8 | 12.8 | 12.8 | 0.0 | 0.0 | 12.5 | 10.5 |
| Delay Adj: | 1.00 | 1.00 | 1.00 | 1.00 | 1.00 | 1.00 | 1.00 | 1.00 | 1.00 | 1.00 | 1.00 | 1.00 |
| AdjDel/Veh: | 0.0 | 0.0 | 0.0 | 12.8 | 0.0 | 12.8 | 12.8 | 12.8 | 0.0 | 0.0 | 12.5 | 10.5 |
| LOS by Move: | * | * | * | B | * | B | B | B | * | * | B | B |
| ApproachDel: | xxxxxx | | | 12.8 | | | 12.8 | | | 11.5 | | |
| Delay Adj: | xxxxx | | | 1.00 | | | 1.00 | | | 1.00 | | |
| ApprAdjDel: | xxxxxx | | | 12.8 | | | 12.8 | | | 11.5 | | |
| LOS by Appr: | * | | | B | | | B | | | B | | |
| AllWayAvgQ: | 0.0 | 0.0 | 0.0 | 0.7 | 0.7 | 0.7 | 0.8 | 0.8 | 0.8 | 0.0 | 0.7 | 0.6 |

Note: Queue reported is the number of cars per lane.

Traffix 7.9.0215 (c) 2008 Dowling Assoc. Licensed to MMA, LONG BEACH, CA

Valle Verde Home Project
Existing + Ambient
PM Peak Hour

Level Of Service Computation Report
ICU 1(Loss as Cycle Length %) Method (Future Volume Alternative)

Intersection #9 Las Positas/S La Cumbre Rd at US-101 SB Ramps

| | | | |
|---|---|---|---|
| Cycle (sec): | 100 | Critical Vol./Cap.(X): | 0.680 |
| Loss Time (sec): | 10 (Y+R=4.0 sec) | Average Delay (sec/veh): | xxxxxx |
| Optimal Cycle: | 48 | Level Of Service: | B |

| Approach: | North Bound | | | South Bound | | | East Bound | | | West Bound | | |
|---|---|---|---|---|---|---|---|---|---|---|---|---|
| Movement: | L | T | R | L | T | R | L | T | R | L | T | R |
| Control: | Protected | | | Protected | | | Protected | | | Protected | | |
| Rights: | Include | | | Include | | | Include | | | Include | | |
| Min. Green: | 0 | 0 | 0 | 0 | 0 | 0 | 0 | 0 | 0 | 0 | 0 | 0 |
| Lanes: | 0 0 2 | 0 | 1 | 2 0 1 | 0 | 0 | 1 1 0 | 0 | 1 | 0 0 0 | 0 | 0 |
| Volume Module: | | | | | | | | | | | | |
| Base Vol: | 0 | 314 | 144 | 599 | 385 | 0 | 604 | 1 | 75 | 0 | 0 | 0 |
| Growth Adj: | 1.02 | 1.02 | 1.02 | 1.02 | 1.02 | 1.02 | 1.02 | 1.02 | 1.02 | 1.02 | 1.02 | 1.02 |
| Initial Bse: | 0 | 320 | 147 | 611 | 393 | 0 | 616 | 1 | 77 | 0 | 0 | 0 |
| Added Vol: | 0 | 0 | 0 | 0 | 0 | 0 | 0 | 0 | 0 | 0 | 0 | 0 |
| PasserByVol: | 0 | 0 | 0 | 0 | 0 | 0 | 0 | 0 | 0 | 0 | 0 | 0 |
| Initial Fut: | 0 | 320 | 147 | 611 | 393 | 0 | 616 | 1 | 77 | 0 | 0 | 0 |
| User Adj: | 1.00 | 1.00 | 1.00 | 1.00 | 1.00 | 1.00 | 1.00 | 1.00 | 1.00 | 1.00 | 1.00 | 1.00 |
| PHF Adj: | 1.00 | 1.00 | 1.00 | 1.00 | 1.00 | 1.00 | 1.00 | 1.00 | 1.00 | 1.00 | 1.00 | 1.00 |
| PHF Volume: | 0 | 320 | 147 | 611 | 393 | 0 | 616 | 1 | 77 | 0 | 0 | 0 |
| Reduct Vol: | 0 | 0 | 0 | 0 | 0 | 0 | 0 | 0 | 0 | 0 | 0 | 0 |
| Reduced Vol: | 0 | 320 | 147 | 611 | 393 | 0 | 616 | 1 | 77 | 0 | 0 | 0 |
| PCE Adj: | 1.00 | 1.00 | 1.00 | 1.00 | 1.00 | 1.00 | 1.00 | 1.00 | 1.00 | 1.00 | 1.00 | 1.00 |
| MLF Adj: | 1.00 | 1.00 | 1.00 | 1.00 | 1.00 | 1.00 | 1.00 | 1.00 | 1.00 | 1.00 | 1.00 | 1.00 |
| FinalVolume: | 0 | 320 | 147 | 611 | 393 | 0 | 616 | 1 | 77 | 0 | 0 | 0 |
| Saturation Flow Module: | | | | | | | | | | | | |
| Sat/Lane: | 1600 | 1600 | 1600 | 1600 | 1600 | 1600 | 1600 | 1600 | 1600 | 1600 | 1600 | 1600 |
| Adjustment: | 1.00 | 1.00 | 1.00 | 0.80 | 1.00 | 1.00 | 0.80 | 1.00 | 1.00 | 1.00 | 1.00 | 1.00 |
| Lanes: | 0.00 | 2.00 | 1.00 | 2.00 | 1.00 | 0.00 | 1.99 | 0.01 | 1.00 | 0.00 | 0.00 | 0.00 |
| Final Sat.: | 0 | 3200 | 1600 | 2560 | 1600 | 0 | 2556 | 5 | 1600 | 0 | 0 | 0 |
| Capacity Analysis Module: | | | | | | | | | | | | |
| Vol/Sat: | 0.00 | 0.10 | 0.09 | 0.24 | 0.25 | 0.00 | 0.24 | 0.19 | 0.05 | 0.00 | 0.00 | 0.00 |
| Crit Moves: | | **** | | **** | | | **** | | | | | |

Valle Verde Home Project
Existing + Ambient
PM Peak Hour

Scenario Report

| | |
|---|---|
| Scenario: | E+A PM |
| Command: | E+A PM |
| Volume: | E+A PM |
| Geometry: | Existing |
| Impact Fee: | Default Impact Fee |
| Trip Generation: | none |
| Trip Distribution: | none |
| Paths: | Default Path |
| Routes: | Default Route |
| Configuration: | E+A PM |

Valle Verde Home Project
Existing + Ambient
PM Peak Hour

Turning Movement Report
none

| Volume | Northbound | | | Southbound | | | Eastbound | | | Westbound | | | Total |
|---|---|---|---|---|---|---|---|---|---|---|---|---|---|
| Type | Left | Thru | Right | Left | Thru | Right | Left | Thru | Right | Left | Thru | Right | Volume |
| #6 Calle de los Amigos at Modoc Rd | | | | | | | | | | | | | |
| Base | 71 | 0 | 36 | 0 | 0 | 0 | 0 | 335 | 111 | 49 | 281 | 0 | 882 |
| Added | 0 | 0 | 0 | 0 | 0 | 0 | 0 | 0 | 0 | 0 | 0 | 0 | 0 |
| Total | 71 | 0 | 36 | 0 | 0 | 0 | 0 | 335 | 111 | 49 | 281 | 0 | 882 |
| #7 Via Senda at Modoc Rd | | | | | | | | | | | | | |
| Base | 100 | 0 | 210 | 0 | 0 | 0 | 0 | 192 | 71 | 181 | 183 | 0 | 936 |
| Added | 0 | 0 | 0 | 0 | 0 | 0 | 0 | 0 | 0 | 0 | 0 | 0 | 0 |
| Total | 100 | 0 | 210 | 0 | 0 | 0 | 0 | 192 | 71 | 181 | 183 | 0 | 936 |
| #8 Via Senda at Las Palmas Dr | | | | | | | | | | | | | |
| Base | 0 | 0 | 0 | 231 | 0 | 28 | 28 | 279 | 0 | 0 | 276 | 275 | 1117 |
| Added | 0 | 0 | 0 | 0 | 0 | 0 | 0 | 0 | 0 | 0 | 0 | 0 | 0 |
| Total | 0 | 0 | 0 | 231 | 0 | 28 | 28 | 279 | 0 | 0 | 276 | 275 | 1117 |
| #9 Las Palmas/S La Cumbre Rd at US-101 SB Ramps | | | | | | | | | | | | | |
| Base | 0 | 320 | 147 | 611 | 393 | 0 | 616 | 1 | 77 | 0 | 0 | 0 | 2164 |
| Added | 0 | 0 | 0 | 0 | 0 | 0 | 0 | 0 | 0 | 0 | 0 | 0 | 0 |
| Total | 0 | 320 | 147 | 611 | 393 | 0 | 616 | 1 | 77 | 0 | 0 | 0 | 2164 |

Valle Verde Home Project
Existing + Ambient
PM Peak Hour

Impact Analysis Report
Level Of Service

| Intersection | Base LOS | Base Del/ Veh | Base V/ C | Future LOS | Future Del/ Veh | Future V/ C | Change in |
|---|---|---|---|---|---|---|---|
| # 6 Calle de los Amigos at Modoc R | C | 15.2 | 0.000 | C | 15.2 | 0.000 | + 0.000 D/V |
| # 7 Via Senda at Modoc Rd | B | 12.2 | 0.535 | B | 12.2 | 0.535 | + 0.000 V/C |
| # 8 Via Senda at Las Palmas Dr | B | 12.2 | 0.471 | B | 12.2 | 0.471 | + 0.000 V/C |
| # 9 Las Palmas/S La Cumbre Rd at | C | 27.5 | 0.601 | C | 27.5 | 0.601 | + 0.000 D/V |

Traffix 7.9.0215 (c) 2008 Dowling Assoc. Licensed to MMA, LONG BEACH, CA

Valle Verde Home Project
Existing + Ambient
PM Peak Hour

Level Of Service Computation Report
2000 HCM Unsignalized Method (Future Volume Alternative)

Intersection #6 Calle de los Amigos at Modoc Rd

Average Crit Del (sec/veh): 2.3 Worst Case Level Of Service: C[ 15.2]

| Street Name: | Calle de los Amigos | | | | | | | | | Modoc Rd | | | | | | | | |
|---|---|---|---|---|---|---|---|---|---|---|---|---|---|---|---|---|---|---|
| Approach: | North Bound | | | | South Bound | | | | East Bound | | | | West Bound | | | | | |
| Movement: | L | - | T | - | R | L | - | T | - | R | L | - | T | - | R | L | - | T | - | R |
| Control: | Stop Sign | | | | | Stop Sign | | | | | Uncontrolled | | | | | Uncontrolled | | | | |
| Rights: | Include | | | | | Include | | | | | Include | | | | | Include | | | | |
| Lanes: | 1 | 0 | 0 | 0 | 1 | 0 | 0 | 0 | 0 | 0 | 0 | 0 | 0 | 1 | 0 | 1 | 0 | 1 | 0 | 0 |
| Volume Module: | | | | | | | | | | | | | | | | | | | | |
| Base Vol: | 70 | | 0 | | 35 | 0 | | 0 | | 0 | 0 | | 328 | | 109 | 48 | | 275 | | 0 |
| Growth Adj: | 1.02 | 1.02 | | 1.02 | | 1.02 | 1.02 | | 1.02 | | 1.02 | 1.02 | | 1.02 | | 1.02 | 1.02 | | 1.02 | |
| Initial Bse: | 71 | | 0 | | 36 | 0 | | 0 | | 0 | 0 | | 335 | | 111 | 49 | | 281 | | 0 |
| Added Vol: | 0 | | 0 | | 0 | 0 | | 0 | | 0 | 0 | | 0 | | 0 | 0 | | 0 | | 0 |
| PasserByVol: | 0 | | 0 | | 0 | 0 | | 0 | | 0 | 0 | | 0 | | 0 | 0 | | 0 | | 0 |
| Initial Fut: | 71 | | 0 | | 36 | 0 | | 0 | | 0 | 0 | | 335 | | 111 | 49 | | 281 | | 0 |
| User Adj: | 1.00 | 1.00 | | 1.00 | | 1.00 | 1.00 | | 1.00 | | 1.00 | 1.00 | | 1.00 | | 1.00 | 1.00 | | 1.00 | |
| PHF Adj: | 1.00 | 1.00 | | 1.00 | | 1.00 | 1.00 | | 1.00 | | 1.00 | 1.00 | | 1.00 | | 1.00 | 1.00 | | 1.00 | |
| PHF Volume: | 71 | | 0 | | 36 | 0 | | 0 | | 0 | 0 | | 335 | | 111 | 49 | | 281 | | 0 |
| Reduct Vol: | 0 | | 0 | | 0 | 0 | | 0 | | 0 | 0 | | 0 | | 0 | 0 | | 0 | | 0 |
| FinalVolume: | 71 | | 0 | | 36 | 0 | | 0 | | 0 | 0 | | 335 | | 111 | 49 | | 281 | | 0 |
| Critical Gap Module: | | | | | | | | | | | | | | | | | | | | |
| Critical Gp: | 6.4 | xxxx | | | 6.2 | xxxxx | xxxx | xxxxx | | xxxxx | xxxx | xxxxx | | | 4.1 | xxxx | xxxxx | | | |
| FollowUpTim: | 3.5 | xxxx | | | 3.3 | xxxxx | xxxx | xxxxx | | xxxxx | xxxx | xxxxx | | | 2.2 | xxxx | xxxxx | | | |
| Capacity Module: | | | | | | | | | | | | | | | | | | | | |
| Cnflict Vol: | 769 | xxxx | | | 390 | xxxx | xxxx | xxxxx | | xxxx | xxxx | xxxxx | | | 446 | xxxx | xxxxx | | | |
| Potent Cap.: | 372 | xxxx | | | 663 | xxxx | xxxx | xxxxx | | xxxx | xxxx | xxxxx | | | 1125 | xxxx | xxxxx | | | |
| Move Cap.: | 360 | xxxx | | | 663 | xxxx | xxxx | xxxxx | | xxxx | xxxx | xxxxx | | | 1125 | xxxx | xxxxx | | | |
| Volume/Cap: | 0.20 | xxxx | | | 0.05 | xxxx | xxxx | xxxx | | xxxx | xxxx | xxxx | | | 0.04 | xxxx | xxxx | | | |
| Level Of Service Module: | | | | | | | | | | | | | | | | | | | | |
| 2Way95thQ: | 0.7 | xxxx | | | 0.2 | xxxx | xxxx | xxxxx | | xxxx | xxxx | xxxxx | | | 0.1 | xxxx | xxxxx | | | |
| Control Del: | 17.5 | xxxx | | | 10.7 | xxxxx | xxxx | xxxxx | | xxxxx | xxxx | xxxxx | | | 8.3 | xxxx | xxxxx | | | |
| LOS by Move: | C | | * | | B | * | * | * | | * | * | * | | | A | * | * | | | |
| Movement: | LT | - | LTR | - | RT | LT | - | LTR | - | RT | LT | - | LTR | - | RT | LT | - | LTR | - | RT |
| Shared Cap.: | xxxx | xxxx | | | xxxxx | xxxx | xxxx | xxxxx | | xxxx | xxxx | xxxxx | | | xxxx | xxxx | xxxxx | | | |
| SharedQueue: | xxxxx | xxxx | | | xxxxx | xxxxx | xxxx | xxxxx | | xxxxx | xxxx | xxxxx | | | xxxxx | xxxx | xxxxx | | | |
| Shrd ConDel: | xxxxx | xxxx | | | xxxxx | xxxxx | xxxx | xxxxx | | xxxxx | xxxx | xxxxx | | | xxxxx | xxxx | xxxxx | | | |
| Shared LOS: | * | | * | | * | * | | * | | * | * | | * | | * | * | | * | | |
| ApproachDel: | | | 15.2 | | | | | xxxxxx | | | | | xxxxxx | | | | | xxxxxx | | |
| ApproachLOS: | | | C | | | | | * | | | | | * | | | | | * | | |

Note: Queue reported is the number of cars per lane.

Valle Verde Home Project
Existing + Ambient
PM Peak Hour

Level Of Service Computation Report
2000 HCM 4-Way Stop Method (Future Volume Alternative)

Intersection #7 Via Senda at Modoc Rd

| | | | |
|---|---|---|---|
| Cycle (sec): | 100 | Critical Vol./Cap.(X): | 0.535 |
| Loss Time (sec): | 0 (Y+R=4.0 sec) | Average Delay (sec/veh): | 12.2 |
| Optimal Cycle: | 0 | Level Of Service: | B |

| Street Name: | Via Senda | | | | | | Modoc Rd | | | | | |
|---|---|---|---|---|---|---|---|---|---|---|---|---|
| Approach: | North Bound | | | South Bound | | | East Bound | | | West Bound | | |
| Movement: | L - | T - | R | L - | T - | R | L - | T - | R | L - | T - | R |
| Control: | Stop Sign | | | Stop Sign | | | Stop Sign | | | Stop Sign | | |
| Rights: | Include | | | Include | | | Include | | | Include | | |
| Min. Green: | 0 | 0 | 0 | 0 | 0 | 0 | 0 | 0 | 0 | 0 | 0 | 0 |
| Lanes: | 0 0 | 1! 0 | 0 | 0 0 | 0 0 | 0 | 0 0 | 0 1 | 0 | 0 1 | 0 0 | 0 |
| Volume Module: | | | | | | | | | | | | |
| Base Vol: | 98 | 0 | 206 | 0 | 0 | 0 | 0 | 188 | 70 | 177 | 179 | 0 |
| Growth Adj: | 1.02 | 1.02 | 1.02 | 1.02 | 1.02 | 1.02 | 1.02 | 1.02 | 1.02 | 1.02 | 1.02 | 1.02 |
| Initial Bse: | 100 | 0 | 210 | 0 | 0 | 0 | 0 | 192 | 71 | 181 | 183 | 0 |
| Added Vol: | 0 | 0 | 0 | 0 | 0 | 0 | 0 | 0 | 0 | 0 | 0 | 0 |
| PasserByVol: | 0 | 0 | 0 | 0 | 0 | 0 | 0 | 0 | 0 | 0 | 0 | 0 |
| Initial Fut: | 100 | 0 | 210 | 0 | 0 | 0 | 0 | 192 | 71 | 181 | 183 | 0 |
| User Adj: | 1.00 | 1.00 | 1.00 | 1.00 | 1.00 | 1.00 | 1.00 | 1.00 | 1.00 | 1.00 | 1.00 | 1.00 |
| PHF Adj: | 1.00 | 1.00 | 1.00 | 1.00 | 1.00 | 1.00 | 1.00 | 1.00 | 1.00 | 1.00 | 1.00 | 1.00 |
| PHF Volume: | 100 | 0 | 210 | 0 | 0 | 0 | 0 | 192 | 71 | 181 | 183 | 0 |
| Reduct Vol: | 0 | 0 | 0 | 0 | 0 | 0 | 0 | 0 | 0 | 0 | 0 | 0 |
| Reduced Vol: | 100 | 0 | 210 | 0 | 0 | 0 | 0 | 192 | 71 | 181 | 183 | 0 |
| PCE Adj: | 1.00 | 1.00 | 1.00 | 1.00 | 1.00 | 1.00 | 1.00 | 1.00 | 1.00 | 1.00 | 1.00 | 1.00 |
| MLF Adj: | 1.00 | 1.00 | 1.00 | 1.00 | 1.00 | 1.00 | 1.00 | 1.00 | 1.00 | 1.00 | 1.00 | 1.00 |
| FinalVolume: | 100 | 0 | 210 | 0 | 0 | 0 | 0 | 192 | 71 | 181 | 183 | 0 |
| Saturation Flow Module: | | | | | | | | | | | | |
| Adjustment: | 1.00 | 1.00 | 1.00 | 1.00 | 1.00 | 1.00 | 1.00 | 1.00 | 1.00 | 1.00 | 1.00 | 1.00 |
| Lanes: | 0.32 | 0.00 | 0.68 | 0.00 | 0.00 | 0.00 | 0.00 | 0.73 | 0.27 | 0.50 | 0.50 | 0.00 |
| Final Sat.: | 218 | 0 | 458 | 0 | 0 | 0 | 0 | 499 | 186 | 337 | 341 | 0 |
| Capacity Analysis Module: | | | | | | | | | | | | |
| Vol/Sat: | 0.46 | xxxx | 0.46 | xxxx | xxxx | xxxx | xxxx | 0.38 | 0.38 | 0.54 | 0.54 | xxxx |
| Crit Moves: | **** | | | | | | | **** | | | **** | |
| Delay/Veh: | 11.8 | 0.0 | 11.8 | 0.0 | 0.0 | 0.0 | 0.0 | 10.9 | 10.9 | 13.5 | 13.5 | 0.0 |
| Delay Adj: | 1.00 | 1.00 | 1.00 | 1.00 | 1.00 | 1.00 | 1.00 | 1.00 | 1.00 | 1.00 | 1.00 | 1.00 |
| AdjDel/Veh: | 11.8 | 0.0 | 11.8 | 0.0 | 0.0 | 0.0 | 0.0 | 10.9 | 10.9 | 13.5 | 13.5 | 0.0 |
| LOS by Move: | B | * | B | * | * | * | * | B | B | B | B | * |
| ApproachDel: | 11.8 | | | xxxxxx | | | 10.9 | | | 13.5 | | |
| Delay Adj: | 1.00 | | | xxxxx | | | 1.00 | | | 1.00 | | |
| ApprAdjDel: | 11.8 | | | xxxxxx | | | 10.9 | | | 13.5 | | |
| LOS by Appr: | B | | | * | | | B | | | B | | |
| AllWayAvgQ: | 0.7 | 0.7 | 0.7 | 0.0 | 0.0 | 0.0 | 0.5 | 0.5 | 0.5 | 1.0 | 1.0 | 1.0 |

Note: Queue reported is the number of cars per lane.

Traffix 7.9.0215 (c) 2008 Dowling Assoc. Licensed to MMA, LONG BEACH, CA

Valle Verde Home Project
Existing + Ambient
PM Peak Hour

Level Of Service Computation Report
2000 HCM 4-Way Stop Method (Future Volume Alternative)

Intersection #8 Via Senda at Las Palmas Dr

Cycle (sec): 100 Critical Vol./Cap.(X): 0.471
Loss Time (sec): 0 (Y+R=4.0 sec) Average Delay (sec/veh): 12.2
Optimal Cycle: 0 Level Of Service: B

| Street Name: | Via Senda | | | | | | Las Palmas Dr | | | | | |
|---|---|---|---|---|---|---|---|---|---|---|---|---|
| Approach: | North Bound | | | South Bound | | | East Bound | | | West Bound | | |
| Movement: | L - | T - | R | L - | T - | R | L - | T - | R | L - | T - | R |
| Control: | Stop Sign | | | Stop Sign | | | Stop Sign | | | Stop Sign | | |
| Rights: | Include | | | Include | | | Include | | | Include | | |
| Min. Green: | 0 | 0 | 0 | 0 | 0 | 0 | 0 | 0 | 0 | 0 | 0 | 0 |
| Lanes: | 0 0 | 0 0 | 0 | 0 0 | 1! 0 | 0 | 0 1 | 0 0 | 0 | 0 0 | 1 0 | 1 |
| Volume Module: | | | | | | | | | | | | |
| Base Vol: | 0 | 0 | 0 | 226 | 0 | 27 | 27 | 274 | 0 | 0 | 271 | 270 |
| Growth Adj: | 1.02 | 1.02 | 1.02 | 1.02 | 1.02 | 1.02 | 1.02 | 1.02 | 1.02 | 1.02 | 1.02 | 1.02 |
| Initial Bse: | 0 | 0 | 0 | 231 | 0 | 28 | 28 | 279 | 0 | 0 | 276 | 275 |
| Added Vol: | 0 | 0 | 0 | 0 | 0 | 0 | 0 | 0 | 0 | 0 | 0 | 0 |
| PasserByVol: | 0 | 0 | 0 | 0 | 0 | 0 | 0 | 0 | 0 | 0 | 0 | 0 |
| Initial Fut: | 0 | 0 | 0 | 231 | 0 | 28 | 28 | 279 | 0 | 0 | 276 | 275 |
| User Adj: | 1.00 | 1.00 | 1.00 | 1.00 | 1.00 | 1.00 | 1.00 | 1.00 | 1.00 | 1.00 | 1.00 | 1.00 |
| PHF Adj: | 1.00 | 1.00 | 1.00 | 1.00 | 1.00 | 1.00 | 1.00 | 1.00 | 1.00 | 1.00 | 1.00 | 1.00 |
| PHF Volume: | 0 | 0 | 0 | 231 | 0 | 28 | 28 | 279 | 0 | 0 | 276 | 275 |
| Reduct Vol: | 0 | 0 | 0 | 0 | 0 | 0 | 0 | 0 | 0 | 0 | 0 | 0 |
| Reduced Vol: | 0 | 0 | 0 | 231 | 0 | 28 | 28 | 279 | 0 | 0 | 276 | 275 |
| PCE Adj: | 1.00 | 1.00 | 1.00 | 1.00 | 1.00 | 1.00 | 1.00 | 1.00 | 1.00 | 1.00 | 1.00 | 1.00 |
| MLF Adj: | 1.00 | 1.00 | 1.00 | 1.00 | 1.00 | 1.00 | 1.00 | 1.00 | 1.00 | 1.00 | 1.00 | 1.00 |
| FinalVolume: | 0 | 0 | 0 | 231 | 0 | 28 | 28 | 279 | 0 | 0 | 276 | 275 |
| Saturation Flow Module: | | | | | | | | | | | | |
| Adjustment: | 1.00 | 1.00 | 1.00 | 1.00 | 1.00 | 1.00 | 1.00 | 1.00 | 1.00 | 1.00 | 1.00 | 1.00 |
| Lanes: | 0.00 | 0.00 | 0.00 | 0.89 | 0.00 | 0.11 | 0.09 | 0.91 | 0.00 | 0.00 | 1.00 | 1.00 |
| Final Sat.: | 0 | 0 | 0 | 528 | 0 | 63 | 58 | 593 | 0 | 0 | 629 | 718 |
| Capacity Analysis Module: | | | | | | | | | | | | |
| Vol/Sat: | xxxx | xxxx | xxxx | 0.44 | xxxx | 0.44 | 0.47 | 0.47 | xxxx | xxxx | 0.44 | 0.38 |
| Crit Moves: | | | | **** | | | | **** | | | **** | |
| Delay/Veh: | 0.0 | 0.0 | 0.0 | 12.8 | 0.0 | 12.8 | 12.8 | 12.8 | 0.0 | 0.0 | 12.5 | 10.5 |
| Delay Adj: | 1.00 | 1.00 | 1.00 | 1.00 | 1.00 | 1.00 | 1.00 | 1.00 | 1.00 | 1.00 | 1.00 | 1.00 |
| AdjDel/Veh: | 0.0 | 0.0 | 0.0 | 12.8 | 0.0 | 12.8 | 12.8 | 12.8 | 0.0 | 0.0 | 12.5 | 10.5 |
| LOS by Move: | * | * | * | B | * | B | B | B | * | * | B | B |
| ApproachDel: | xxxxxx | | | 12.8 | | | 12.8 | | | 11.5 | | |
| Delay Adj: | xxxxx | | | 1.00 | | | 1.00 | | | 1.00 | | |
| ApprAdjDel: | xxxxxx | | | 12.8 | | | 12.8 | | | 11.5 | | |
| LOS by Appr: | * | | | B | | | B | | | B | | |
| AllWayAvgQ: | 0.0 | 0.0 | 0.0 | 0.7 | 0.7 | 0.7 | 0.8 | 0.8 | 0.8 | 0.0 | 0.7 | 0.6 |

Note: Queue reported is the number of cars per lane.

Valle Verde Home Project
Existing + Ambient
PM Peak Hour

Level Of Service Computation Report
2000 HCM Operations Method (Future Volume Alternative)

Intersection #9 Las Positas/S La Cumbre Rd at US-101 SB Ramps

| | | | |
|---|---|---|---|
| Cycle (sec): | 100 | Critical Vol./Cap.(X): | 0.601 |
| Loss Time (sec): | 10 (Y+R=4.0 sec) | Average Delay (sec/veh): | 27.5 |
| Optimal Cycle: | 44 | Level Of Service: | C |

| Approach: | North Bound | | | South Bound | | | East Bound | | | West Bound | | |
|---|---|---|---|---|---|---|---|---|---|---|---|---|
| Movement: | L - | T - | R | L - | T - | R | L - | T - | R | L - | T - | R |
| Control: | Protected | | | Protected | | | Protected | | | Protected | | |
| Rights: | Include | | | Include | | | Include | | | Include | | |
| Min. Green: | 0 | 0 | 0 | 0 | 0 | 0 | 0 | 0 | 0 | 0 | 0 | 0 |
| Lanes: | 0 0 | 2 0 | 1 | 2 0 | 1 0 | 0 | 1 1 | 0 0 | 1 | 0 0 | 0 0 | 0 |
| Volume Module: | | | | | | | | | | | | |
| Base Vol: | 0 | 314 | 144 | 599 | 385 | 0 | 604 | 1 | 75 | 0 | 0 | 0 |
| Growth Adj: | 1.02 | 1.02 | 1.02 | 1.02 | 1.02 | 1.02 | 1.02 | 1.02 | 1.02 | 1.02 | 1.02 | 1.02 |
| Initial Bse: | 0 | 320 | 147 | 611 | 393 | 0 | 616 | 1 | 77 | 0 | 0 | 0 |
| Added Vol: | 0 | 0 | 0 | 0 | 0 | 0 | 0 | 0 | 0 | 0 | 0 | 0 |
| PasserByVol: | 0 | 0 | 0 | 0 | 0 | 0 | 0 | 0 | 0 | 0 | 0 | 0 |
| Initial Fut: | 0 | 320 | 147 | 611 | 393 | 0 | 616 | 1 | 77 | 0 | 0 | 0 |
| User Adj: | 1.00 | 1.00 | 1.00 | 1.00 | 1.00 | 1.00 | 1.00 | 1.00 | 1.00 | 1.00 | 1.00 | 1.00 |
| PHF Adj: | 1.00 | 1.00 | 1.00 | 1.00 | 1.00 | 1.00 | 1.00 | 1.00 | 1.00 | 1.00 | 1.00 | 1.00 |
| PHF Volume: | 0 | 320 | 147 | 611 | 393 | 0 | 616 | 1 | 77 | 0 | 0 | 0 |
| Reduct Vol: | 0 | 0 | 0 | 0 | 0 | 0 | 0 | 0 | 0 | 0 | 0 | 0 |
| Reduced Vol: | 0 | 320 | 147 | 611 | 393 | 0 | 616 | 1 | 77 | 0 | 0 | 0 |
| PCE Adj: | 1.00 | 1.00 | 1.00 | 1.00 | 1.00 | 1.00 | 1.00 | 1.00 | 1.00 | 1.00 | 1.00 | 1.00 |
| MLF Adj: | 1.00 | 1.00 | 1.00 | 1.00 | 1.00 | 1.00 | 1.00 | 1.00 | 1.00 | 1.00 | 1.00 | 1.00 |
| FinalVolume: | 0 | 320 | 147 | 611 | 393 | 0 | 616 | 1 | 77 | 0 | 0 | 0 |
| Saturation Flow Module: | | | | | | | | | | | | |
| Sat/Lane: | 1900 | 1900 | 1900 | 1900 | 1900 | 1900 | 1900 | 1900 | 1900 | 1900 | 1900 | 1900 |
| Adjustment: | 1.00 | 0.95 | 0.85 | 0.74 | 1.00 | 1.00 | 0.69 | 0.87 | 0.85 | 1.00 | 1.00 | 1.00 |
| Lanes: | 0.00 | 2.00 | 1.00 | 2.00 | 1.00 | 0.00 | 1.99 | 0.01 | 1.00 | 0.00 | 0.00 | 0.00 |
| Final Sat.: | 0 | 3610 | 1615 | 2801 | 1900 | 0 | 2632 | 4 | 1615 | 0 | 0 | 0 |
| Capacity Analysis Module: | | | | | | | | | | | | |
| Vol/Sat: | 0.00 | 0.09 | 0.09 | 0.22 | 0.21 | 0.00 | 0.23 | 0.23 | 0.05 | 0.00 | 0.00 | 0.00 |
| Crit Moves: | | **** | | **** | | | **** | | | | | |
| Green/Cycle: | 0.00 | 0.15 | 0.15 | 0.36 | 0.51 | 0.00 | 0.39 | 0.39 | 0.39 | 0.00 | 0.00 | 0.00 |
| Volume/Cap: | 0.00 | 0.60 | 0.62 | 0.60 | 0.40 | 0.00 | 0.60 | 0.60 | 0.12 | 0.00 | 0.00 | 0.00 |
| Delay/Veh: | 0.0 | 41.8 | 44.7 | 27.0 | 15.4 | 0.0 | 25.3 | 25.3 | 19.7 | 0.0 | 0.0 | 0.0 |
| User DelAdj: | 1.00 | 1.00 | 1.00 | 1.00 | 1.00 | 1.00 | 1.00 | 1.00 | 1.00 | 1.00 | 1.00 | 1.00 |
| AdjDel/Veh: | 0.0 | 41.8 | 44.7 | 27.0 | 15.4 | 0.0 | 25.3 | 25.3 | 19.7 | 0.0 | 0.0 | 0.0 |
| LOS by Move: | A | D | D | C | B | A | C | C | B | A | A | A |
| HCM2kAvgQ: | 0 | 6 | 5 | 9 | 7 | 0 | 8 | 10 | 2 | 0 | 0 | 0 |

Note: Queue reported is the number of cars per lane.

# FUTURE WITHOUT PROJECT – CUP BUILDOUT
# LOS WORKSHEETS

# WEEKDAY AM PEAK HOUR

Valle Verde Home Project
Existing+Ambient+Project (CUP Buildout)
AM Peak Hour

Scenario Report

| | |
|---|---|
| Scenario: | E+A+P Alt2 AM |
| Command: | E+A+P Alt2 AM |
| Volume: | E+A AM |
| Geometry: | Existing |
| Impact Fee: | Default Impact Fee |
| Trip Generation: | AM Peak |
| Trip Distribution: | Trip Distribution |
| Paths: | Default Path |
| Routes: | Default Route |
| Configuration: | E+A+P Alt2 AM |

Valle Verde Home Project
Existing+Ambient+Project (CUP Buildout)
AM Peak Hour

Trip Generation Report

Forecast for AM Peak

| Zone # | Subzone | Amount | Units | Rate In | Rate Out | Trips In | Trips Out | Total Trips | % Of Total |
|---|---|---|---|---|---|---|---|---|---|
| 102 | Project (Val | 1.00 | Residential | 3.00 | 3.00 | 3 | 3 | 6 | 100.0 |
| | Zone 102 Subtotal ..... | | | | | 3 | 3 | 6 | 100.0 |
| TOTAL ..... | | | | | | 3 | 3 | 6 | 100.0 |

Trip Distribution Report

Percent Of Trips Distribution

To Gates

| Zone | 1 | 2 | 3 | 4 | 5 | 7 | 8 | 10 |
|---|---|---|---|---|---|---|---|---|
| 102 | 5.0 | 5.0 | 40.0 | 30.0 | 5.0 | 0.0 | 10.0 | 5.0 |

Valle Verde Home Project
Existing+Ambient+Project (CUP Buildout)
AM Peak Hour

Turning Movement Report
AM Peak

| Volume | Northbound | | | Southbound | | | Eastbound | | | Westbound | | | Total |
|---|---|---|---|---|---|---|---|---|---|---|---|---|---|
| Type | Left | Thru | Right | Left | Thru | Right | Left | Thru | Right | Left | Thru | Right | Volume |
| #6 Calle de los Amigos at Modoc Rd | | | | | | | | | | | | | |
| Base | 98 | 0 | 46 | 0 | 0 | 0 | 0 | 198 | 53 | 19 | 312 | 0 | 726 |
| Added | 1 | 0 | 1 | 0 | 0 | 0 | 0 | 0 | 1 | 1 | 0 | 0 | 4 |
| Total | 99 | 0 | 47 | 0 | 0 | 0 | 0 | 198 | 54 | 20 | 312 | 0 | 730 |
| #7 Via Senda at Modoc Rd | | | | | | | | | | | | | |
| Base | 38 | 0 | 139 | 0 | 0 | 0 | 0 | 118 | 96 | 179 | 134 | 0 | 703 |
| Added | 0 | 0 | 1 | 0 | 0 | 0 | 0 | 0 | 0 | 1 | 0 | 0 | 2 |
| Total | 38 | 0 | 140 | 0 | 0 | 0 | 0 | 118 | 96 | 180 | 134 | 0 | 705 |
| #8 Via Senda at Las Palmas Dr | | | | | | | | | | | | | |
| Base | 0 | 0 | 0 | 242 | 0 | 35 | 27 | 289 | 0 | 0 | 344 | 149 | 1084 |
| Added | 0 | 0 | 0 | 1 | 0 | 0 | 0 | 0 | 0 | 0 | 0 | 1 | 2 |
| Total | 0 | 0 | 0 | 243 | 0 | 35 | 27 | 289 | 0 | 0 | 344 | 150 | 1086 |
| #9 Las Palmas/S La Cumbre Rd at US-101 SB Ramps | | | | | | | | | | | | | |
| Base | 0 | 430 | 244 | 458 | 393 | 0 | 467 | 5 | 112 | 0 | 0 | 0 | 2109 |
| Added | 0 | 1 | 0 | 0 | 0 | 0 | 0 | 0 | 1 | 0 | 0 | 0 | 2 |
| Total | 0 | 431 | 244 | 458 | 393 | 0 | 467 | 5 | 113 | 0 | 0 | 0 | 2111 |

Valle Verde Home Project
Existing+Ambient+Project (CUP Buildout)
AM Peak Hour

Impact Analysis Report
Level Of Service

| Intersection | Base LOS | Base Del/ Veh | Base V/ C | Future LOS | Future Del/ Veh | Future V/ C | Change in |
|---|---|---|---|---|---|---|---|
| # 6 Calle de los Amigos at Modoc R | B | 12.9 | 0.000 | B | 13.0 | 0.000 | + 0.040 D/V |
| # 7 Via Senda at Modoc Rd | A | 9.7 | 0.415 | A | 9.8 | 0.416 | + 0.002 V/C |
| # 8 Via Senda at Las Palmas Dr | B | 13.2 | 0.554 | B | 13.2 | 0.555 | + 0.000 V/C |
| # 9 Las Palmas/S La Cumbre Rd at | B | xxxxx | 0.616 | B | xxxxx | 0.616 | + 0.000 V/C |

Traffix 7.9.0215 (c) 2008 Dowling Assoc. Licensed to MMA, LONG BEACH, CA

Valle Verde Home Project
Existing+Ambient+Project (CUP Buildout)
AM Peak Hour

Level Of Service Computation Report
2000 HCM Unsignalized Method (Future Volume Alternative)

Intersection #6 Calle de los Amigos at Modoc Rd

Average Delay (sec/veh): 2.8 Worst Case Level Of Service: B[ 13.0]

| Street Name: | Calle de los Amigos | | | | | | | | | Modoc Rd | | | | | | | | |
|---|---|---|---|---|---|---|---|---|---|---|---|---|---|---|---|---|---|---|
| Approach: | North Bound | | | | | South Bound | | | | | East Bound | | | | | West Bound | | |
| Movement: | L | - | T | - | R | L | - | T | - | R | L | - | T | - | R | L | - | T | - | R |
| Control: | Stop Sign | | | | | Stop Sign | | | | | Uncontrolled | | | | | Uncontrolled | | | | |
| Rights: | Include | | | | | Include | | | | | Include | | | | | Include | | | | |
| Lanes: | 1 | 0 | 0 | 0 | 1 | 0 | 0 | 0 | 0 | 0 | 0 | 0 | 0 | 1 | 0 | 1 | 0 | 1 | 0 | 0 |
| Volume Module: | | | | | | | | | | | | | | | | | | | | |
| Base Vol: | 96 | | 0 | | 45 | 0 | | 0 | | 0 | 0 | | 194 | | 52 | 19 | | 306 | | 0 |
| Growth Adj: | 1.02 | 1.02 | | 1.02 | | 1.02 | 1.02 | | 1.02 | | 1.02 | 1.02 | | 1.02 | | 1.02 | 1.02 | | 1.02 | |
| Initial Bse: | 98 | | 0 | | 46 | 0 | | 0 | | 0 | 0 | | 198 | | 53 | 19 | | 312 | | 0 |
| Added Vol: | 1 | | 0 | | 1 | 0 | | 0 | | 0 | 0 | | 0 | | 1 | 1 | | 0 | | 0 |
| PasserByVol: | 0 | | 0 | | 0 | 0 | | 0 | | 0 | 0 | | 0 | | 0 | 0 | | 0 | | 0 |
| Initial Fut: | 99 | | 0 | | 47 | 0 | | 0 | | 0 | 0 | | 198 | | 54 | 20 | | 312 | | 0 |
| User Adj: | 1.00 | 1.00 | | 1.00 | | 1.00 | 1.00 | | 1.00 | | 1.00 | 1.00 | | 1.00 | | 1.00 | 1.00 | | 1.00 | |
| PHF Adj: | 1.00 | 1.00 | | 1.00 | | 1.00 | 1.00 | | 1.00 | | 1.00 | 1.00 | | 1.00 | | 1.00 | 1.00 | | 1.00 | |
| PHF Volume: | 99 | | 0 | | 47 | 0 | | 0 | | 0 | 0 | | 198 | | 54 | 20 | | 312 | | 0 |
| Reduct Vol: | 0 | | 0 | | 0 | 0 | | 0 | | 0 | 0 | | 0 | | 0 | 0 | | 0 | | 0 |
| FinalVolume: | 99 | | 0 | | 47 | 0 | | 0 | | 0 | 0 | | 198 | | 54 | 20 | | 312 | | 0 |
| Critical Gap Module: | | | | | | | | | | | | | | | | | | | | |
| Critical Gp: | 6.4 | xxxx | | | 6.2 | xxxxx | xxxx | xxxxx | | | xxxxx | xxxx | xxxxx | | | 4.1 | xxxx | xxxxx | | |
| FollowUpTim: | 3.5 | xxxx | | | 3.3 | xxxxx | xxxx | xxxxx | | | xxxxx | xxxx | xxxxx | | | 2.2 | xxxx | xxxxx | | |
| Capacity Module: | | | | | | | | | | | | | | | | | | | | |
| Cnflict Vol: | 578 | xxxx | | | 225 | xxxx | xxxx | xxxxx | | | xxxx | xxxx | xxxxx | | | 252 | xxxx | xxxxx | | |
| Potent Cap.: | 481 | xxxx | | | 820 | xxxx | xxxx | xxxxx | | | xxxx | xxxx | xxxxx | | | 1325 | xxxx | xxxxx | | |
| Move Cap.: | 476 | xxxx | | | 820 | xxxx | xxxx | xxxxx | | | xxxx | xxxx | xxxxx | | | 1325 | xxxx | xxxxx | | |
| Volume/Cap: | 0.21 | xxxx | | | 0.06 | xxxx | xxxx | xxxx | | | xxxx | xxxx | xxxx | | | 0.02 | xxxx | xxxx | | |
| Level Of Service Module: | | | | | | | | | | | | | | | | | | | | |
| 2Way95thQ: | 0.8 | xxxx | | | 0.2 | xxxx | xxxx | xxxxx | | | xxxx | xxxx | xxxxx | | | 0.0 | xxxx | xxxxx | | |
| Control Del: | 14.5 | xxxx | | | 9.7 | xxxxx | xxxx | xxxxx | | | xxxxx | xxxx | xxxxx | | | 7.8 | xxxx | xxxxx | | |
| LOS by Move: | B | * | | | A | * | * | * | | | * | * | * | | | A | * | * | | |
| Movement: | LT | - | LTR | - | RT | LT | - | LTR | - | RT | LT | - | LTR | - | RT | LT | - | LTR | - | RT |
| Shared Cap.: | xxxx | xxxx | | | xxxxx | xxxx | xxxx | xxxxx | | | xxxx | xxxx | xxxxx | | | xxxx | xxxx | xxxxx | | |
| SharedQueue: | xxxxx | xxxx | | | xxxxx | xxxxx | xxxx | xxxxx | | | xxxxx | xxxx | xxxxx | | | xxxxx | xxxx | xxxxx | | |
| Shrd ConDel: | xxxxx | xxxx | | | xxxxx | xxxxx | xxxx | xxxxx | | | xxxxx | xxxx | xxxxx | | | xxxxx | xxxx | xxxxx | | |
| Shared LOS: | * | * | | | * | * | * | * | | | * | * | * | | | * | * | * | | |
| ApproachDel: | | | 13.0 | | | | | xxxxxx | | | | | xxxxxx | | | | | xxxxxx | | |
| ApproachLOS: | | | B | | | | | * | | | | | * | | | | | * | | |

Note: Queue reported is the number of cars per lane.

Valle Verde Home Project
Existing+Ambient+Project (CUP Buildout)
AM Peak Hour

Level Of Service Computation Report
2000 HCM 4-Way Stop Method (Future Volume Alternative)

Intersection #7 Via Senda at Modoc Rd

| | | | |
|---|---|---|---|
| Cycle (sec): | 100 | Critical Vol./Cap.(X): | 0.416 |
| Loss Time (sec): | 0 (Y+R=4.0 sec) | Average Delay (sec/veh): | 9.8 |
| Optimal Cycle: | 0 | Level Of Service: | A |

| Street Name: | Via Senda | | | | | | Modoc Rd | | | | | |
|---|---|---|---|---|---|---|---|---|---|---|---|---|
| Approach: | North Bound | | | South Bound | | | East Bound | | | West Bound | | |
| Movement: | L - | T - | R | L - | T - | R | L - | T - | R | L - | T - | R |
| Control: | Stop Sign | | | Stop Sign | | | Stop Sign | | | Stop Sign | | |
| Rights: | Include | | | Include | | | Include | | | Include | | |
| Min. Green: | 0 | 0 | 0 | 0 | 0 | 0 | 0 | 0 | 0 | 0 | 0 | 0 |
| Lanes: | 0 0 | 1! 0 | 0 | 0 0 | 0 0 | 0 | 0 0 | 0 1 | 0 | 0 1 | 0 0 | 0 |
| Volume Module: | | | | | | | | | | | | |
| Base Vol: | 37 | 0 | 136 | 0 | 0 | 0 | 0 | 116 | 94 | 175 | 131 | 0 |
| Growth Adj: | 1.02 | 1.02 | 1.02 | 1.02 | 1.02 | 1.02 | 1.02 | 1.02 | 1.02 | 1.02 | 1.02 | 1.02 |
| Initial Bse: | 38 | 0 | 139 | 0 | 0 | 0 | 0 | 118 | 96 | 179 | 134 | 0 |
| Added Vol: | 0 | 0 | 1 | 0 | 0 | 0 | 0 | 0 | 0 | 1 | 0 | 0 |
| PasserByVol: | 0 | 0 | 0 | 0 | 0 | 0 | 0 | 0 | 0 | 0 | 0 | 0 |
| Initial Fut: | 38 | 0 | 140 | 0 | 0 | 0 | 0 | 118 | 96 | 180 | 134 | 0 |
| User Adj: | 1.00 | 1.00 | 1.00 | 1.00 | 1.00 | 1.00 | 1.00 | 1.00 | 1.00 | 1.00 | 1.00 | 1.00 |
| PHF Adj: | 1.00 | 1.00 | 1.00 | 1.00 | 1.00 | 1.00 | 1.00 | 1.00 | 1.00 | 1.00 | 1.00 | 1.00 |
| PHF Volume: | 38 | 0 | 140 | 0 | 0 | 0 | 0 | 118 | 96 | 180 | 134 | 0 |
| Reduct Vol: | 0 | 0 | 0 | 0 | 0 | 0 | 0 | 0 | 0 | 0 | 0 | 0 |
| Reduced Vol: | 38 | 0 | 140 | 0 | 0 | 0 | 0 | 118 | 96 | 180 | 134 | 0 |
| PCE Adj: | 1.00 | 1.00 | 1.00 | 1.00 | 1.00 | 1.00 | 1.00 | 1.00 | 1.00 | 1.00 | 1.00 | 1.00 |
| MLF Adj: | 1.00 | 1.00 | 1.00 | 1.00 | 1.00 | 1.00 | 1.00 | 1.00 | 1.00 | 1.00 | 1.00 | 1.00 |
| FinalVolume: | 38 | 0 | 140 | 0 | 0 | 0 | 0 | 118 | 96 | 180 | 134 | 0 |
| Saturation Flow Module: | | | | | | | | | | | | |
| Adjustment: | 1.00 | 1.00 | 1.00 | 1.00 | 1.00 | 1.00 | 1.00 | 1.00 | 1.00 | 1.00 | 1.00 | 1.00 |
| Lanes: | 0.21 | 0.00 | 0.79 | 0.00 | 0.00 | 0.00 | 0.00 | 0.55 | 0.45 | 0.57 | 0.43 | 0.00 |
| Final Sat.: | 154 | 0 | 571 | 0 | 0 | 0 | 0 | 435 | 353 | 431 | 321 | 0 |
| Capacity Analysis Module: | | | | | | | | | | | | |
| Vol/Sat: | 0.24 | xxxx | 0.24 | xxxx | xxxx | xxxx | xxxx | 0.27 | 0.27 | 0.42 | 0.42 | xxxx |
| Crit Moves: | **** | | | | | | | | **** | | **** | |
| Delay/Veh: | 8.9 | 0.0 | 8.9 | 0.0 | 0.0 | 0.0 | 0.0 | 9.0 | 9.0 | 10.8 | 10.8 | 0.0 |
| Delay Adj: | 1.00 | 1.00 | 1.00 | 1.00 | 1.00 | 1.00 | 1.00 | 1.00 | 1.00 | 1.00 | 1.00 | 1.00 |
| AdjDel/Veh: | 8.9 | 0.0 | 8.9 | 0.0 | 0.0 | 0.0 | 0.0 | 9.0 | 9.0 | 10.8 | 10.8 | 0.0 |
| LOS by Move: | A | * | A | * | * | * | * | A | A | B | B | * |
| ApproachDel: | 8.9 | | | xxxxxx | | | 9.0 | | | 10.8 | | |
| Delay Adj: | 1.00 | | | xxxxx | | | 1.00 | | | 1.00 | | |
| ApprAdjDel: | 8.9 | | | xxxxxx | | | 9.0 | | | 10.8 | | |
| LOS by Appr: | A | | | * | | | A | | | B | | |
| AllWayAvgQ: | 0.3 | 0.3 | 0.3 | 0.0 | 0.0 | 0.0 | 0.3 | 0.3 | 0.3 | 0.7 | 0.7 | 0.7 |

Note: Queue reported is the number of cars per lane.

Valle Verde Home Project
Existing+Ambient+Project (CUP Buildout)
AM Peak Hour

Level Of Service Computation Report
2000 HCM 4-Way Stop Method (Future Volume Alternative)

Intersection #8 Via Senda at Las Palmas Dr

| | | | |
|---|---|---|---|
| Cycle (sec): | 100 | Critical Vol./Cap.(X): | 0.555 |
| Loss Time (sec): | 0 (Y+R=4.0 sec) | Average Delay (sec/veh): | 13.2 |
| Optimal Cycle: | 0 | Level Of Service: | B |

| Street Name: | Via Senda | | | | | | Las Palmas Dr | | | | | |
|---|---|---|---|---|---|---|---|---|---|---|---|---|
| Approach: | North Bound | | | South Bound | | | East Bound | | | West Bound | | |
| Movement: | L - | T - | R | L - | T - | R | L - | T - | R | L - | T - | R |
| Control: | Stop Sign | | | Stop Sign | | | Stop Sign | | | Stop Sign | | |
| Rights: | Include | | | Include | | | Include | | | Include | | |
| Min. Green: | 0 | 0 | 0 | 0 | 0 | 0 | 0 | 0 | 0 | 0 | 0 | 0 |
| Lanes: | 0 0 | 0 0 | 0 | 0 0 | 1! 0 | 0 | 0 1 | 0 0 | 0 | 0 0 | 1 0 | 1 |
| Volume Module: | | | | | | | | | | | | |
| Base Vol: | 0 | 0 | 0 | 237 | 0 | 34 | 26 | 283 | 0 | 0 | 337 | 146 |
| Growth Adj: | 1.02 | 1.02 | 1.02 | 1.02 | 1.02 | 1.02 | 1.02 | 1.02 | 1.02 | 1.02 | 1.02 | 1.02 |
| Initial Bse: | 0 | 0 | 0 | 242 | 0 | 35 | 27 | 289 | 0 | 0 | 344 | 149 |
| Added Vol: | 0 | 0 | 0 | 1 | 0 | 0 | 0 | 0 | 0 | 0 | 0 | 1 |
| PasserByVol: | 0 | 0 | 0 | 0 | 0 | 0 | 0 | 0 | 0 | 0 | 0 | 0 |
| Initial Fut: | 0 | 0 | 0 | 243 | 0 | 35 | 27 | 289 | 0 | 0 | 344 | 150 |
| User Adj: | 1.00 | 1.00 | 1.00 | 1.00 | 1.00 | 1.00 | 1.00 | 1.00 | 1.00 | 1.00 | 1.00 | 1.00 |
| PHF Adj: | 1.00 | 1.00 | 1.00 | 1.00 | 1.00 | 1.00 | 1.00 | 1.00 | 1.00 | 1.00 | 1.00 | 1.00 |
| PHF Volume: | 0 | 0 | 0 | 243 | 0 | 35 | 27 | 289 | 0 | 0 | 344 | 150 |
| Reduct Vol: | 0 | 0 | 0 | 0 | 0 | 0 | 0 | 0 | 0 | 0 | 0 | 0 |
| Reduced Vol: | 0 | 0 | 0 | 243 | 0 | 35 | 27 | 289 | 0 | 0 | 344 | 150 |
| PCE Adj: | 1.00 | 1.00 | 1.00 | 1.00 | 1.00 | 1.00 | 1.00 | 1.00 | 1.00 | 1.00 | 1.00 | 1.00 |
| MLF Adj: | 1.00 | 1.00 | 1.00 | 1.00 | 1.00 | 1.00 | 1.00 | 1.00 | 1.00 | 1.00 | 1.00 | 1.00 |
| FinalVolume: | 0 | 0 | 0 | 243 | 0 | 35 | 27 | 289 | 0 | 0 | 344 | 150 |
| Saturation Flow Module: | | | | | | | | | | | | |
| Adjustment: | 1.00 | 1.00 | 1.00 | 1.00 | 1.00 | 1.00 | 1.00 | 1.00 | 1.00 | 1.00 | 1.00 | 1.00 |
| Lanes: | 0.00 | 0.00 | 0.00 | 0.87 | 0.00 | 0.13 | 0.08 | 0.92 | 0.00 | 0.00 | 1.00 | 1.00 |
| Final Sat.: | 0 | 0 | 0 | 518 | 0 | 74 | 54 | 590 | 0 | 0 | 620 | 704 |
| Capacity Analysis Module: | | | | | | | | | | | | |
| Vol/Sat: | xxxx | xxxx | xxxx | 0.47 | xxxx | 0.47 | 0.49 | 0.49 | xxxx | xxxx | 0.55 | 0.21 |
| Crit Moves: | | | | **** | | | | **** | | | **** | |
| Delay/Veh: | 0.0 | 0.0 | 0.0 | 13.3 | 0.0 | 13.3 | 13.3 | 13.3 | 0.0 | 0.0 | 14.9 | 9.0 |
| Delay Adj: | 1.00 | 1.00 | 1.00 | 1.00 | 1.00 | 1.00 | 1.00 | 1.00 | 1.00 | 1.00 | 1.00 | 1.00 |
| AdjDel/Veh: | 0.0 | 0.0 | 0.0 | 13.3 | 0.0 | 13.3 | 13.3 | 13.3 | 0.0 | 0.0 | 14.9 | 9.0 |
| LOS by Move: | * | * | * | B | * | B | B | B | * | * | B | A |
| ApproachDel: | xxxxxx | | | 13.3 | | | 13.3 | | | 13.1 | | |
| Delay Adj: | xxxxx | | | 1.00 | | | 1.00 | | | 1.00 | | |
| ApprAdjDel: | xxxxxx | | | 13.3 | | | 13.3 | | | 13.1 | | |
| LOS by Appr: | * | | | B | | | B | | | B | | |
| AllWayAvgQ: | 0.0 | 0.0 | 0.0 | 0.7 | 0.7 | 0.7 | 0.9 | 0.9 | 0.9 | 0.0 | 1.1 | 0.3 |

Note: Queue reported is the number of cars per lane.

Traffix 7.9.0215 (c) 2008 Dowling Assoc. Licensed to MMA, LONG BEACH, CA

Valle Verde Home Project
Existing+Ambient+Project (CUP Buildout)
AM Peak Hour

Level Of Service Computation Report
ICU 1(Loss as Cycle Length %) Method (Future Volume Alternative)

Intersection #9 Las Palmas/S La Cumbre Rd at US-101 SB Ramps

| | | | |
|---|---|---|---|
| Cycle (sec): | 100 | Critical Vol./Cap.(X): | 0.616 |
| Loss Time (sec): | 10 (Y+R=4.0 sec) | Average Delay (sec/veh): | xxxxxx |
| Optimal Cycle: | 41 | Level Of Service: | B |

| Approach: | North Bound | | | South Bound | | | East Bound | | | West Bound | | |
|---|---|---|---|---|---|---|---|---|---|---|---|---|
| Movement: | L - | T - | R | L - | T - | R | L - | T - | R | L - | T - | R |
| Control: | Protected | | | Protected | | | Protected | | | Protected | | |
| Rights: | Include | | | Include | | | Include | | | Include | | |
| Min. Green: | 0 | 0 | 0 | 0 | 0 | 0 | 0 | 0 | 0 | 0 | 0 | 0 |
| Lanes: | 0 0 | 2 0 | 1 | 2 0 | 1 0 | 0 | 1 1 | 0 0 | 1 | 0 0 | 0 0 | 0 |
| Volume Module: | | | | | | | | | | | | |
| Base Vol: | 0 | 422 | 239 | 449 | 385 | 0 | 458 | 5 | 110 | 0 | 0 | 0 |
| Growth Adj: | 1.02 | 1.02 | 1.02 | 1.02 | 1.02 | 1.02 | 1.02 | 1.02 | 1.02 | 1.02 | 1.02 | 1.02 |
| Initial Bse: | 0 | 430 | 244 | 458 | 393 | 0 | 467 | 5 | 112 | 0 | 0 | 0 |
| Added Vol: | 0 | 1 | 0 | 0 | 0 | 0 | 0 | 0 | 1 | 0 | 0 | 0 |
| PasserByVol: | 0 | 0 | 0 | 0 | 0 | 0 | 0 | 0 | 0 | 0 | 0 | 0 |
| Initial Fut: | 0 | 431 | 244 | 458 | 393 | 0 | 467 | 5 | 113 | 0 | 0 | 0 |
| User Adj: | 1.00 | 1.00 | 1.00 | 1.00 | 1.00 | 1.00 | 1.00 | 1.00 | 1.00 | 1.00 | 1.00 | 1.00 |
| PHF Adj: | 1.00 | 1.00 | 1.00 | 1.00 | 1.00 | 1.00 | 1.00 | 1.00 | 1.00 | 1.00 | 1.00 | 1.00 |
| PHF Volume: | 0 | 431 | 244 | 458 | 393 | 0 | 467 | 5 | 113 | 0 | 0 | 0 |
| Reduct Vol: | 0 | 0 | 0 | 0 | 0 | 0 | 0 | 0 | 0 | 0 | 0 | 0 |
| Reduced Vol: | 0 | 431 | 244 | 458 | 393 | 0 | 467 | 5 | 113 | 0 | 0 | 0 |
| PCE Adj: | 1.00 | 1.00 | 1.00 | 1.00 | 1.00 | 1.00 | 1.00 | 1.00 | 1.00 | 1.00 | 1.00 | 1.00 |
| MLF Adj: | 1.00 | 1.00 | 1.00 | 1.00 | 1.00 | 1.00 | 1.00 | 1.00 | 1.00 | 1.00 | 1.00 | 1.00 |
| FinalVolume: | 0 | 431 | 244 | 458 | 393 | 0 | 467 | 5 | 113 | 0 | 0 | 0 |
| Saturation Flow Module: | | | | | | | | | | | | |
| Sat/Lane: | 1600 | 1600 | 1600 | 1600 | 1600 | 1600 | 1600 | 1600 | 1600 | 1600 | 1600 | 1600 |
| Adjustment: | 1.00 | 1.00 | 1.00 | 0.80 | 1.00 | 1.00 | 0.80 | 1.00 | 1.00 | 1.00 | 1.00 | 1.00 |
| Lanes: | 0.00 | 2.00 | 1.00 | 2.00 | 1.00 | 0.00 | 1.98 | 0.02 | 1.00 | 0.00 | 0.00 | 0.00 |
| Final Sat.: | 0 | 3200 | 1600 | 2560 | 1600 | 0 | 2532 | 35 | 1600 | 0 | 0 | 0 |
| Capacity Analysis Module: | | | | | | | | | | | | |
| Vol/Sat: | 0.00 | 0.13 | 0.15 | 0.18 | 0.25 | 0.00 | 0.18 | 0.15 | 0.07 | 0.00 | 0.00 | 0.00 |
| Crit Moves: | | | **** | **** | | | **** | | | | | |

Valle Verde Home Project
Existing+Ambient+Project (CUP Buildout)
AM Peak Hour

Scenario Report

| | |
|---|---|
| Scenario: | E+A+P Alt2 AM |
| Command: | E+A+P Alt2 AM |
| Volume: | E+A AM |
| Geometry: | Existing |
| Impact Fee: | Default Impact Fee |
| Trip Generation: | AM Peak |
| Trip Distribution: | Trip Distribution |
| Paths: | Default Path |
| Routes: | Default Route |
| Configuration: | E+A+P Alt2 AM |

Valle Verde Home Project
Existing+Ambient+Project (CUP Buildout)
AM Peak Hour

Trip Generation Report

Forecast for AM Peak

| Zone # | Subzone | Amount | Units | Rate In | Rate Out | Trips In | Trips Out | Total Trips | % Of Total |
|---|---|---|---|---|---|---|---|---|---|
| 102 | Project (Val | 1.00 | Residential | 3.00 | 3.00 | 3 | 3 | 6 | 100.0 |
| | Zone 102 Subtotal ..... | | | | | 3 | 3 | 6 | 100.0 |
| TOTAL ..... | | | | | | 3 | 3 | 6 | 100.0 |

Trip Distribution Report

Percent Of Trips Distribution

To Gates

| Zone | 1 | 2 | 3 | 4 | 5 | 7 | 8 | 10 |
|---|---|---|---|---|---|---|---|---|
| 102 | 5.0 | 5.0 | 40.0 | 30.0 | 5.0 | 0.0 | 10.0 | 5.0 |

Valle Verde Home Project
Existing+Ambient+Project (CUP Buildout)
AM Peak Hour

Turning Movement Report
AM Peak

| Volume | Northbound | | | Southbound | | | Eastbound | | | Westbound | | | Total |
|---|---|---|---|---|---|---|---|---|---|---|---|---|---|
| Type | Left | Thru | Right | Left | Thru | Right | Left | Thru | Right | Left | Thru | Right | Volume |
| #6 Calle de los Amigos at Modoc Rd | | | | | | | | | | | | | |
| Base | 98 | 0 | 46 | 0 | 0 | 0 | 0 | 198 | 53 | 19 | 312 | 0 | 726 |
| Added | 1 | 0 | 1 | 0 | 0 | 0 | 0 | 0 | 1 | 1 | 0 | 0 | 4 |
| Total | 99 | 0 | 47 | 0 | 0 | 0 | 0 | 198 | 54 | 20 | 312 | 0 | 730 |
| #7 Via Senda at Modoc Rd | | | | | | | | | | | | | |
| Base | 38 | 0 | 139 | 0 | 0 | 0 | 0 | 118 | 96 | 179 | 134 | 0 | 703 |
| Added | 0 | 0 | 1 | 0 | 0 | 0 | 0 | 0 | 0 | 1 | 0 | 0 | 2 |
| Total | 38 | 0 | 140 | 0 | 0 | 0 | 0 | 118 | 96 | 180 | 134 | 0 | 705 |
| #8 Via Senda at Las Palmas Dr | | | | | | | | | | | | | |
| Base | 0 | 0 | 0 | 242 | 0 | 35 | 27 | 289 | 0 | 0 | 344 | 149 | 1084 |
| Added | 0 | 0 | 0 | 1 | 0 | 0 | 0 | 0 | 0 | 0 | 0 | 1 | 2 |
| Total | 0 | 0 | 0 | 243 | 0 | 35 | 27 | 289 | 0 | 0 | 344 | 150 | 1086 |
| #9 Las Palmas/S La Cumbre Rd at US-101 SB Ramps | | | | | | | | | | | | | |
| Base | 0 | 430 | 244 | 458 | 393 | 0 | 467 | 5 | 112 | 0 | 0 | 0 | 2109 |
| Added | 0 | 1 | 0 | 0 | 0 | 0 | 0 | 0 | 1 | 0 | 0 | 0 | 2 |
| Total | 0 | 431 | 244 | 458 | 393 | 0 | 467 | 5 | 113 | 0 | 0 | 0 | 2111 |

Valle Verde Home Project
Existing+Ambient+Project (CUP Buildout)
AM Peak Hour

Impact Analysis Report
Level Of Service

| Intersection | Base LOS | Base Del/ Veh | Base V/ C | Future LOS | Future Del/ Veh | Future V/ C | Change in |
|---|---|---|---|---|---|---|---|
| # 6 Calle de los Amigos at Modoc R | B | 12.9 | 0.000 | B | 13.0 | 0.000 | + 0.040 D/V |
| # 7 Via Senda at Modoc Rd | A | 9.7 | 0.415 | A | 9.8 | 0.416 | + 0.002 V/C |
| # 8 Via Senda at Las Palmas Dr | B | 13.2 | 0.554 | B | 13.2 | 0.555 | + 0.000 V/C |
| # 9 Las Palmas/S La Cumbre Rd at | C | 26.2 | 0.545 | C | 26.2 | 0.545 | + 0.004 D/V |

Traffix 7.9.0215 (c) 2008 Dowling Assoc. Licensed to MMA, LONG BEACH, CA

Valle Verde Home Project
Existing+Ambient+Project (CUP Buildout)
AM Peak Hour

Level Of Service Computation Report
2000 HCM Unsignalized Method (Future Volume Alternative)

Intersection #6 Calle de los Amigos at Modoc Rd

Average Delay (sec/veh): 2.8 Worst Case Level Of Service: B[ 13.0]

| Street Name: | Calle de los Amigos | | | | | | | | | Modoc Rd | | | | | | | | |
|---|---|---|---|---|---|---|---|---|---|---|---|---|---|---|---|---|---|---|
| Approach: | North Bound | | | | | South Bound | | | | | East Bound | | | | | West Bound | | |
| Movement: | L | - | T | - | R | L | - | T | - | R | L | - | T | - | R | L | - | T | - | R |
| Control: | Stop Sign | | | | | Stop Sign | | | | | Uncontrolled | | | | | Uncontrolled | | | | |
| Rights: | Include | | | | | Include | | | | | Include | | | | | Include | | | | |
| Lanes: | 1 | 0 | 0 | 0 | 1 | 0 | 0 | 0 | 0 | 0 | 0 | 0 | 0 | 1 | 0 | 1 | 0 | 1 | 0 | 0 |
| Volume Module: | | | | | | | | | | | | | | | | | | | | |
| Base Vol: | 96 | | 0 | | 45 | 0 | | 0 | | 0 | 0 | | 194 | | 52 | 19 | | 306 | | 0 |
| Growth Adj: | 1.02 | 1.02 | | 1.02 | | 1.02 | 1.02 | | 1.02 | | 1.02 | 1.02 | | 1.02 | | 1.02 | 1.02 | | 1.02 | |
| Initial Bse: | 98 | | 0 | | 46 | 0 | | 0 | | 0 | 0 | | 198 | | 53 | 19 | | 312 | | 0 |
| Added Vol: | 1 | | 0 | | 1 | 0 | | 0 | | 0 | 0 | | 0 | | 1 | 1 | | 0 | | 0 |
| PasserByVol: | 0 | | 0 | | 0 | 0 | | 0 | | 0 | 0 | | 0 | | 0 | 0 | | 0 | | 0 |
| Initial Fut: | 99 | | 0 | | 47 | 0 | | 0 | | 0 | 0 | | 198 | | 54 | 20 | | 312 | | 0 |
| User Adj: | 1.00 | 1.00 | | 1.00 | | 1.00 | 1.00 | | 1.00 | | 1.00 | 1.00 | | 1.00 | | 1.00 | 1.00 | | 1.00 | |
| PHF Adj: | 1.00 | 1.00 | | 1.00 | | 1.00 | 1.00 | | 1.00 | | 1.00 | 1.00 | | 1.00 | | 1.00 | 1.00 | | 1.00 | |
| PHF Volume: | 99 | | 0 | | 47 | 0 | | 0 | | 0 | 0 | | 198 | | 54 | 20 | | 312 | | 0 |
| Reduct Vol: | 0 | | 0 | | 0 | 0 | | 0 | | 0 | 0 | | 0 | | 0 | 0 | | 0 | | 0 |
| FinalVolume: | 99 | | 0 | | 47 | 0 | | 0 | | 0 | 0 | | 198 | | 54 | 20 | | 312 | | 0 |
| Critical Gap Module: | | | | | | | | | | | | | | | | | | | | |
| Critical Gp: | 6.4 | xxxx | | | 6.2 | xxxxx | xxxx | xxxxx | | | xxxxx | xxxx | xxxxx | | | 4.1 | xxxx | xxxxx | | |
| FollowUpTim: | 3.5 | xxxx | | | 3.3 | xxxxx | xxxx | xxxxx | | | xxxxx | xxxx | xxxxx | | | 2.2 | xxxx | xxxxx | | |
| Capacity Module: | | | | | | | | | | | | | | | | | | | | |
| Cnflict Vol: | 578 | xxxx | | | 225 | xxxx | xxxx | xxxxx | | | xxxx | xxxx | xxxxx | | | 252 | xxxx | xxxxx | | |
| Potent Cap.: | 481 | xxxx | | | 820 | xxxx | xxxx | xxxxx | | | xxxx | xxxx | xxxxx | | | 1325 | xxxx | xxxxx | | |
| Move Cap.: | 476 | xxxx | | | 820 | xxxx | xxxx | xxxxx | | | xxxx | xxxx | xxxxx | | | 1325 | xxxx | xxxxx | | |
| Volume/Cap: | 0.21 | xxxx | | | 0.06 | xxxx | xxxx | xxxx | | | xxxx | xxxx | xxxx | | | 0.02 | xxxx | xxxx | | |
| Level Of Service Module: | | | | | | | | | | | | | | | | | | | | |
| 2Way95thQ: | 0.8 | xxxx | | | 0.2 | xxxx | xxxx | xxxxx | | | xxxx | xxxx | xxxxx | | | 0.0 | xxxx | xxxxx | | |
| Control Del: | 14.5 | xxxx | | | 9.7 | xxxxx | xxxx | xxxxx | | | xxxxx | xxxx | xxxxx | | | 7.8 | xxxx | xxxxx | | |
| LOS by Move: | B | * | | | A | * | * | * | | | * | * | * | | | A | * | * | | |
| Movement: | LT | - | LTR | - | RT | LT | - | LTR | - | RT | LT | - | LTR | - | RT | LT | - | LTR | - | RT |
| Shared Cap.: | xxxx | xxxx | xxxxx | | | xxxx | xxxx | xxxxx | | | xxxx | xxxx | xxxxx | | | xxxx | xxxx | xxxxx | | |
| SharedQueue: | xxxxx | xxxx | xxxxx | | | xxxxx | xxxx | xxxxx | | | xxxxx | xxxx | xxxxx | | | xxxxx | xxxx | xxxxx | | |
| Shrd ConDel: | xxxxx | xxxx | xxxxx | | | xxxxx | xxxx | xxxxx | | | xxxxx | xxxx | xxxxx | | | xxxxx | xxxx | xxxxx | | |
| Shared LOS: | * | * | * | | | * | * | * | | | * | * | * | | | * | * | * | | |
| ApproachDel: | 13.0 | | | | | xxxxxx | | | | | xxxxxx | | | | | xxxxxx | | | | |
| ApproachLOS: | B | | | | | * | | | | | * | | | | | * | | | | |

Note: Queue reported is the number of cars per lane.

Valle Verde Home Project
Existing+Ambient+Project (CUP Buildout)
AM Peak Hour

Level Of Service Computation Report
2000 HCM 4-Way Stop Method (Future Volume Alternative)

Intersection #7 Via Senda at Modoc Rd

| | | | |
|---|---|---|---|
| Cycle (sec): | 100 | Critical Vol./Cap.(X): | 0.416 |
| Loss Time (sec): | 0 (Y+R=4.0 sec) | Average Delay (sec/veh): | 9.8 |
| Optimal Cycle: | 0 | Level Of Service: | A |

| Street Name: | Via Senda | | | | | | Modoc Rd | | | | | |
|---|---|---|---|---|---|---|---|---|---|---|---|---|
| Approach: | North Bound | | | South Bound | | | East Bound | | | West Bound | | |
| Movement: | L - | T - | R | L - | T - | R | L - | T - | R | L - | T - | R |
| Control: | Stop Sign | | | Stop Sign | | | Stop Sign | | | Stop Sign | | |
| Rights: | Include | | | Include | | | Include | | | Include | | |
| Min. Green: | 0 | 0 | 0 | 0 | 0 | 0 | 0 | 0 | 0 | 0 | 0 | 0 |
| Lanes: | 0 0 | 1! 0 | 0 | 0 0 | 0 0 | 0 | 0 0 | 0 1 | 0 | 0 1 | 0 0 | 0 |
| Volume Module: | | | | | | | | | | | | |
| Base Vol: | 37 | 0 | 136 | 0 | 0 | 0 | 0 | 116 | 94 | 175 | 131 | 0 |
| Growth Adj: | 1.02 | 1.02 | 1.02 | 1.02 | 1.02 | 1.02 | 1.02 | 1.02 | 1.02 | 1.02 | 1.02 | 1.02 |
| Initial Bse: | 38 | 0 | 139 | 0 | 0 | 0 | 0 | 118 | 96 | 179 | 134 | 0 |
| Added Vol: | 0 | 0 | 1 | 0 | 0 | 0 | 0 | 0 | 0 | 1 | 0 | 0 |
| PasserByVol: | 0 | 0 | 0 | 0 | 0 | 0 | 0 | 0 | 0 | 0 | 0 | 0 |
| Initial Fut: | 38 | 0 | 140 | 0 | 0 | 0 | 0 | 118 | 96 | 180 | 134 | 0 |
| User Adj: | 1.00 | 1.00 | 1.00 | 1.00 | 1.00 | 1.00 | 1.00 | 1.00 | 1.00 | 1.00 | 1.00 | 1.00 |
| PHF Adj: | 1.00 | 1.00 | 1.00 | 1.00 | 1.00 | 1.00 | 1.00 | 1.00 | 1.00 | 1.00 | 1.00 | 1.00 |
| PHF Volume: | 38 | 0 | 140 | 0 | 0 | 0 | 0 | 118 | 96 | 180 | 134 | 0 |
| Reduct Vol: | 0 | 0 | 0 | 0 | 0 | 0 | 0 | 0 | 0 | 0 | 0 | 0 |
| Reduced Vol: | 38 | 0 | 140 | 0 | 0 | 0 | 0 | 118 | 96 | 180 | 134 | 0 |
| PCE Adj: | 1.00 | 1.00 | 1.00 | 1.00 | 1.00 | 1.00 | 1.00 | 1.00 | 1.00 | 1.00 | 1.00 | 1.00 |
| MLF Adj: | 1.00 | 1.00 | 1.00 | 1.00 | 1.00 | 1.00 | 1.00 | 1.00 | 1.00 | 1.00 | 1.00 | 1.00 |
| FinalVolume: | 38 | 0 | 140 | 0 | 0 | 0 | 0 | 118 | 96 | 180 | 134 | 0 |
| Saturation Flow Module: | | | | | | | | | | | | |
| Adjustment: | 1.00 | 1.00 | 1.00 | 1.00 | 1.00 | 1.00 | 1.00 | 1.00 | 1.00 | 1.00 | 1.00 | 1.00 |
| Lanes: | 0.21 | 0.00 | 0.79 | 0.00 | 0.00 | 0.00 | 0.00 | 0.55 | 0.45 | 0.57 | 0.43 | 0.00 |
| Final Sat.: | 154 | 0 | 571 | 0 | 0 | 0 | 0 | 435 | 353 | 431 | 321 | 0 |
| Capacity Analysis Module: | | | | | | | | | | | | |
| Vol/Sat: | 0.24 | xxxx | 0.24 | xxxx | xxxx | xxxx | xxxx | 0.27 | 0.27 | 0.42 | 0.42 | xxxx |
| Crit Moves: | **** | | | | | | | | **** | | **** | |
| Delay/Veh: | 8.9 | 0.0 | 8.9 | 0.0 | 0.0 | 0.0 | 0.0 | 9.0 | 9.0 | 10.8 | 10.8 | 0.0 |
| Delay Adj: | 1.00 | 1.00 | 1.00 | 1.00 | 1.00 | 1.00 | 1.00 | 1.00 | 1.00 | 1.00 | 1.00 | 1.00 |
| AdjDel/Veh: | 8.9 | 0.0 | 8.9 | 0.0 | 0.0 | 0.0 | 0.0 | 9.0 | 9.0 | 10.8 | 10.8 | 0.0 |
| LOS by Move: | A | * | A | * | * | * | * | A | A | B | B | * |
| ApproachDel: | 8.9 | | | xxxxxx | | | 9.0 | | | 10.8 | | |
| Delay Adj: | 1.00 | | | xxxxx | | | 1.00 | | | 1.00 | | |
| ApprAdjDel: | 8.9 | | | xxxxxx | | | 9.0 | | | 10.8 | | |
| LOS by Appr: | A | | | * | | | A | | | B | | |
| AllWayAvgQ: | 0.3 | 0.3 | 0.3 | 0.0 | 0.0 | 0.0 | 0.3 | 0.3 | 0.3 | 0.7 | 0.7 | 0.7 |

Note: Queue reported is the number of cars per lane.

Valle Verde Home Project
Existing+Ambient+Project (CUP Buildout)
AM Peak Hour

Level Of Service Computation Report
2000 HCM 4-Way Stop Method (Future Volume Alternative)

Intersection #8 Via Senda at Las Palmas Dr

| | | | |
|---|---|---|---|
| Cycle (sec): | 100 | Critical Vol./Cap.(X): | 0.555 |
| Loss Time (sec): | 0 (Y+R=4.0 sec) | Average Delay (sec/veh): | 13.2 |
| Optimal Cycle: | 0 | Level Of Service: | B |

| Street Name: | Via Senda | | | | | | Las Palmas Dr | | | | | |
|---|---|---|---|---|---|---|---|---|---|---|---|---|
| Approach: | North Bound | | | South Bound | | | East Bound | | | West Bound | | |
| Movement: | L - | T - | R | L - | T - | R | L - | T - | R | L - | T - | R |
| Control: | Stop Sign | | | Stop Sign | | | Stop Sign | | | Stop Sign | | |
| Rights: | Include | | | Include | | | Include | | | Include | | |
| Min. Green: | 0 | 0 | 0 | 0 | 0 | 0 | 0 | 0 | 0 | 0 | 0 | 0 |
| Lanes: | 0 0 | 0 0 | 0 | 0 0 | 1! 0 | 0 | 0 1 | 0 0 | 0 | 0 0 | 1 0 | 1 |
| Volume Module: | | | | | | | | | | | | |
| Base Vol: | 0 | 0 | 0 | 237 | 0 | 34 | 26 | 283 | 0 | 0 | 337 | 146 |
| Growth Adj: | 1.02 | 1.02 | 1.02 | 1.02 | 1.02 | 1.02 | 1.02 | 1.02 | 1.02 | 1.02 | 1.02 | 1.02 |
| Initial Bse: | 0 | 0 | 0 | 242 | 0 | 35 | 27 | 289 | 0 | 0 | 344 | 149 |
| Added Vol: | 0 | 0 | 0 | 1 | 0 | 0 | 0 | 0 | 0 | 0 | 0 | 1 |
| PasserByVol: | 0 | 0 | 0 | 0 | 0 | 0 | 0 | 0 | 0 | 0 | 0 | 0 |
| Initial Fut: | 0 | 0 | 0 | 243 | 0 | 35 | 27 | 289 | 0 | 0 | 344 | 150 |
| User Adj: | 1.00 | 1.00 | 1.00 | 1.00 | 1.00 | 1.00 | 1.00 | 1.00 | 1.00 | 1.00 | 1.00 | 1.00 |
| PHF Adj: | 1.00 | 1.00 | 1.00 | 1.00 | 1.00 | 1.00 | 1.00 | 1.00 | 1.00 | 1.00 | 1.00 | 1.00 |
| PHF Volume: | 0 | 0 | 0 | 243 | 0 | 35 | 27 | 289 | 0 | 0 | 344 | 150 |
| Reduct Vol: | 0 | 0 | 0 | 0 | 0 | 0 | 0 | 0 | 0 | 0 | 0 | 0 |
| Reduced Vol: | 0 | 0 | 0 | 243 | 0 | 35 | 27 | 289 | 0 | 0 | 344 | 150 |
| PCE Adj: | 1.00 | 1.00 | 1.00 | 1.00 | 1.00 | 1.00 | 1.00 | 1.00 | 1.00 | 1.00 | 1.00 | 1.00 |
| MLF Adj: | 1.00 | 1.00 | 1.00 | 1.00 | 1.00 | 1.00 | 1.00 | 1.00 | 1.00 | 1.00 | 1.00 | 1.00 |
| FinalVolume: | 0 | 0 | 0 | 243 | 0 | 35 | 27 | 289 | 0 | 0 | 344 | 150 |
| Saturation Flow Module: | | | | | | | | | | | | |
| Adjustment: | 1.00 | 1.00 | 1.00 | 1.00 | 1.00 | 1.00 | 1.00 | 1.00 | 1.00 | 1.00 | 1.00 | 1.00 |
| Lanes: | 0.00 | 0.00 | 0.00 | 0.87 | 0.00 | 0.13 | 0.08 | 0.92 | 0.00 | 0.00 | 1.00 | 1.00 |
| Final Sat.: | 0 | 0 | 0 | 518 | 0 | 74 | 54 | 590 | 0 | 0 | 620 | 704 |
| Capacity Analysis Module: | | | | | | | | | | | | |
| Vol/Sat: | xxxx | xxxx | xxxx | 0.47 | xxxx | 0.47 | 0.49 | 0.49 | xxxx | xxxx | 0.55 | 0.21 |
| Crit Moves: | | | | **** | | | | **** | | | **** | |
| Delay/Veh: | 0.0 | 0.0 | 0.0 | 13.3 | 0.0 | 13.3 | 13.3 | 13.3 | 0.0 | 0.0 | 14.9 | 9.0 |
| Delay Adj: | 1.00 | 1.00 | 1.00 | 1.00 | 1.00 | 1.00 | 1.00 | 1.00 | 1.00 | 1.00 | 1.00 | 1.00 |
| AdjDel/Veh: | 0.0 | 0.0 | 0.0 | 13.3 | 0.0 | 13.3 | 13.3 | 13.3 | 0.0 | 0.0 | 14.9 | 9.0 |
| LOS by Move: | * | * | * | B | * | B | B | B | * | * | B | A |
| ApproachDel: | xxxxxx | | | 13.3 | | | 13.3 | | | 13.1 | | |
| Delay Adj: | xxxxx | | | 1.00 | | | 1.00 | | | 1.00 | | |
| ApprAdjDel: | xxxxxx | | | 13.3 | | | 13.3 | | | 13.1 | | |
| LOS by Appr: | * | | | B | | | B | | | B | | |
| AllWayAvgQ: | 0.0 | 0.0 | 0.0 | 0.7 | 0.7 | 0.7 | 0.9 | 0.9 | 0.9 | 0.0 | 1.1 | 0.3 |

Note: Queue reported is the number of cars per lane.

Traffix 7.9.0215 (c) 2008 Dowling Assoc. Licensed to MMA, LONG BEACH, CA

Valle Verde Home Project
Existing+Ambient+Project (CUP Buildout)
AM Peak Hour

Level Of Service Computation Report
2000 HCM Operations Method (Future Volume Alternative)

Intersection #9 Las Palmas/S La Cumbre Rd at US-101 SB Ramps

| | | | |
|---|---|---|---|
| Cycle (sec): | 100 | Critical Vol./Cap.(X): | 0.545 |
| Loss Time (sec): | 10 (Y+R=4.0 sec) | Average Delay (sec/veh): | 26.2 |
| Optimal Cycle: | 39 | Level Of Service: | C |

| Approach: | North Bound | | | South Bound | | | East Bound | | | West Bound | | |
|---|---|---|---|---|---|---|---|---|---|---|---|---|
| Movement: | L - | T - | R | L - | T - | R | L - | T - | R | L - | T - | R |
| Control: | Protected | | | Protected | | | Protected | | | Protected | | |
| Rights: | Include | | | Include | | | Include | | | Include | | |
| Min. Green: | 0 | 0 | 0 | 0 | 0 | 0 | 0 | 0 | 0 | 0 | 0 | 0 |
| Lanes: | 0 0 | 2 0 | 1 | 2 0 | 1 0 | 0 | 1 1 | 0 0 | 1 | 0 0 | 0 0 | 0 |
| Volume Module: | | | | | | | | | | | | |
| Base Vol: | 0 | 422 | 239 | 449 | 385 | 0 | 458 | 5 | 110 | 0 | 0 | 0 |
| Growth Adj: | 1.02 | 1.02 | 1.02 | 1.02 | 1.02 | 1.02 | 1.02 | 1.02 | 1.02 | 1.02 | 1.02 | 1.02 |
| Initial Bse: | 0 | 430 | 244 | 458 | 393 | 0 | 467 | 5 | 112 | 0 | 0 | 0 |
| Added Vol: | 0 | 1 | 0 | 0 | 0 | 0 | 0 | 0 | 1 | 0 | 0 | 0 |
| PasserByVol: | 0 | 0 | 0 | 0 | 0 | 0 | 0 | 0 | 0 | 0 | 0 | 0 |
| Initial Fut: | 0 | 431 | 244 | 458 | 393 | 0 | 467 | 5 | 113 | 0 | 0 | 0 |
| User Adj: | 1.00 | 1.00 | 1.00 | 1.00 | 1.00 | 1.00 | 1.00 | 1.00 | 1.00 | 1.00 | 1.00 | 1.00 |
| PHF Adj: | 1.00 | 1.00 | 1.00 | 1.00 | 1.00 | 1.00 | 1.00 | 1.00 | 1.00 | 1.00 | 1.00 | 1.00 |
| PHF Volume: | 0 | 431 | 244 | 458 | 393 | 0 | 467 | 5 | 113 | 0 | 0 | 0 |
| Reduct Vol: | 0 | 0 | 0 | 0 | 0 | 0 | 0 | 0 | 0 | 0 | 0 | 0 |
| Reduced Vol: | 0 | 431 | 244 | 458 | 393 | 0 | 467 | 5 | 113 | 0 | 0 | 0 |
| PCE Adj: | 1.00 | 1.00 | 1.00 | 1.00 | 1.00 | 1.00 | 1.00 | 1.00 | 1.00 | 1.00 | 1.00 | 1.00 |
| MLF Adj: | 1.00 | 1.00 | 1.00 | 1.00 | 1.00 | 1.00 | 1.00 | 1.00 | 1.00 | 1.00 | 1.00 | 1.00 |
| FinalVolume: | 0 | 431 | 244 | 458 | 393 | 0 | 467 | 5 | 113 | 0 | 0 | 0 |
| Saturation Flow Module: | | | | | | | | | | | | |
| Sat/Lane: | 1900 | 1900 | 1900 | 1900 | 1900 | 1900 | 1900 | 1900 | 1900 | 1900 | 1900 | 1900 |
| Adjustment: | 1.00 | 0.95 | 0.85 | 0.74 | 1.00 | 1.00 | 0.70 | 0.88 | 0.85 | 1.00 | 1.00 | 1.00 |
| Lanes: | 0.00 | 2.00 | 1.00 | 2.00 | 1.00 | 0.00 | 1.98 | 0.02 | 1.00 | 0.00 | 0.00 | 0.00 |
| Final Sat.: | 0 | 3610 | 1615 | 2801 | 1900 | 0 | 2652 | 29 | 1615 | 0 | 0 | 0 |
| Capacity Analysis Module: | | | | | | | | | | | | |
| Vol/Sat: | 0.00 | 0.12 | 0.15 | 0.16 | 0.21 | 0.00 | 0.18 | 0.18 | 0.07 | 0.00 | 0.00 | 0.00 |
| Crit Moves: | | | **** | **** | | | **** | | | | | |
| Green/Cycle: | 0.00 | 0.28 | 0.28 | 0.30 | 0.58 | 0.00 | 0.32 | 0.32 | 0.32 | 0.00 | 0.00 | 0.00 |
| Volume/Cap: | 0.00 | 0.43 | 0.55 | 0.55 | 0.36 | 0.00 | 0.55 | 0.55 | 0.22 | 0.00 | 0.00 | 0.00 |
| Delay/Veh: | 0.0 | 30.0 | 32.2 | 30.0 | 11.5 | 0.0 | 28.5 | 28.5 | 24.8 | 0.0 | 0.0 | 0.0 |
| User DelAdj: | 1.00 | 1.00 | 1.00 | 1.00 | 1.00 | 1.00 | 1.00 | 1.00 | 1.00 | 1.00 | 1.00 | 1.00 |
| AdjDel/Veh: | 0.0 | 30.0 | 32.2 | 30.0 | 11.5 | 0.0 | 28.5 | 28.5 | 24.8 | 0.0 | 0.0 | 0.0 |
| LOS by Move: | A | C | C | C | B | A | C | C | C | A | A | A |
| HCM2kAvgQ: | 0 | 6 | 7 | 7 | 6 | 0 | 7 | 8 | 3 | 0 | 0 | 0 |

Note: Queue reported is the number of cars per lane.

# FUTURE WITHOUT PROJECT – CUP BUILDOUT
# LOS WORKSHEETS

# WEEKDAY PM PEAK HOUR

Valle Verde Home Project
Existing+Ambient+Project (CUP Buildout)
PM Peak Hour

Scenario Report

| | |
|---|---|
| Scenario: | E+A+P Alt2 PM |
| Command: | E+A+P Alt2 PM |
| Volume: | E+A PM |
| Geometry: | Existing |
| Impact Fee: | Default Impact Fee |
| Trip Generation: | PM Peak |
| Trip Distribution: | Trip Distribution |
| Paths: | Default Path |
| Routes: | Default Route |
| Configuration: | E+A+P Alt2 PM |

Valle Verde Home Project
Existing+Ambient+Project (CUP Buildout)
PM Peak Hour

Trip Generation Report

Forecast for PM Peak

| Zone # | Subzone | Amount | Units | Rate In | Rate Out | Trips In | Trips Out | Total Trips | % Of Total |
|---|---|---|---|---|---|---|---|---|---|
| 102 | Project (Val | 1.00 | Residential | 6.00 | 6.00 | 6 | 6 | 12 | 100.0 |
| | Zone 102 Subtotal ..... | | | | | 6 | 6 | 12 | 100.0 |
| TOTAL ..... | | | | | | 6 | 6 | 12 | 100.0 |

Trip Distribution Report

Percent Of Trips Distribution

To Gates

| Zone | 1 | 2 | 3 | 4 | 5 | 7 | 8 | 10 |
|---|---|---|---|---|---|---|---|---|
| 102 | 5.0 | 5.0 | 40.0 | 30.0 | 5.0 | 0.0 | 10.0 | 5.0 |

Valle Verde Home Project
Existing+Ambient+Project (CUP Buildout)
PM Peak Hour

Turning Movement Report
PM Peak

| Volume | Northbound | | | Southbound | | | Eastbound | | | Westbound | | | Total |
|---|---|---|---|---|---|---|---|---|---|---|---|---|---|
| Type | Left | Thru | Right | Left | Thru | Right | Left | Thru | Right | Left | Thru | Right | Volume |
| #6 Calle de los Amigos at Modoc Rd | | | | | | | | | | | | | |
| Base | 71 | 0 | 36 | 0 | 0 | 0 | 0 | 335 | 111 | 49 | 281 | 0 | 882 |
| Added | 3 | 0 | 1 | 0 | 0 | 0 | 0 | 0 | 3 | 1 | 0 | 0 | 8 |
| Total | 74 | 0 | 37 | 0 | 0 | 0 | 0 | 335 | 114 | 50 | 281 | 0 | 890 |
| #7 Via Senda at Modoc Rd | | | | | | | | | | | | | |
| Base | 100 | 0 | 210 | 0 | 0 | 0 | 0 | 192 | 71 | 181 | 183 | 0 | 936 |
| Added | 0 | 0 | 3 | 0 | 0 | 0 | 0 | 0 | 0 | 3 | 0 | 0 | 6 |
| Total | 100 | 0 | 213 | 0 | 0 | 0 | 0 | 192 | 71 | 184 | 183 | 0 | 942 |
| #8 Via Senda at Las Palmas Dr | | | | | | | | | | | | | |
| Base | 0 | 0 | 0 | 231 | 0 | 28 | 28 | 279 | 0 | 0 | 276 | 275 | 1117 |
| Added | 0 | 0 | 0 | 3 | 0 | 0 | 0 | 0 | 0 | 0 | 0 | 3 | 6 |
| Total | 0 | 0 | 0 | 234 | 0 | 28 | 28 | 279 | 0 | 0 | 276 | 278 | 1123 |
| #9 Las Palmas/S La Cumbre Rd at US-101 SB Ramps | | | | | | | | | | | | | |
| Base | 0 | 320 | 147 | 611 | 393 | 0 | 616 | 1 | 77 | 0 | 0 | 0 | 2164 |
| Added | 0 | 3 | 0 | 0 | 0 | 0 | 0 | 0 | 2 | 0 | 0 | 0 | 5 |
| Total | 0 | 323 | 147 | 611 | 393 | 0 | 616 | 1 | 79 | 0 | 0 | 0 | 2169 |

Valle Verde Home Project
Existing+Ambient+Project (CUP Buildout)
PM Peak Hour

Impact Analysis Report
Level Of Service

| Intersection | Base LOS | Base Del/ Veh | Base V/ C | Future LOS | Future Del/ Veh | Future V/ C | Change in |
|---|---|---|---|---|---|---|---|
| # 6 Calle de los Amigos at Modoc R | C | 15.2 | 0.000 | C | 15.4 | 0.000 | + 0.172 D/V |
| # 7 Via Senda at Modoc Rd | B | 12.2 | 0.535 | B | 12.3 | 0.541 | + 0.005 V/C |
| # 8 Via Senda at Las Palmas Dr | B | 12.2 | 0.471 | B | 12.2 | 0.473 | + 0.002 V/C |
| # 9 Las Palmas/S La Cumbre Rd at | B | xxxxx | 0.680 | B | xxxxx | 0.681 | + 0.001 V/C |

Traffix 7.9.0215 (c) 2008 Dowling Assoc. Licensed to MMA, LONG BEACH, CA

Valle Verde Home Project
Existing+Ambient+Project (CUP Buildout)
PM Peak Hour

Level Of Service Computation Report
2000 HCM Unsignalized Method (Future Volume Alternative)

Intersection #6 Calle de los Amigos at Modoc Rd

Average Delay (sec/veh): 2.4 Worst Case Level Of Service: C[ 15.4]

| Street Name: | Calle de los Amigos | | | | | | | | | Modoc Rd | | |
|---|---|---|---|---|---|---|---|---|---|---|---|---|
| Approach: | North Bound | | | South Bound | | | East Bound | | | West Bound | | |
| Movement: | L - T - R | | | L - T - R | | | L - T - R | | | L - T - R | | |
| Control: | Stop Sign | | | Stop Sign | | | Uncontrolled | | | Uncontrolled | | |
| Rights: | Include | | | Include | | | Include | | | Include | | |
| Lanes: | 1 0 0 0 1 | | | 0 0 0 0 0 | | | 0 0 0 1 0 | | | 1 0 1 0 0 | | |
| Volume Module: | | | | | | | | | | | | |
| Base Vol: | 70 | 0 | 35 | 0 | 0 | 0 | 0 | 328 | 109 | 48 | 275 | 0 |
| Growth Adj: | 1.02 | 1.02 | 1.02 | 1.02 | 1.02 | 1.02 | 1.02 | 1.02 | 1.02 | 1.02 | 1.02 | 1.02 |
| Initial Bse: | 71 | 0 | 36 | 0 | 0 | 0 | 0 | 335 | 111 | 49 | 281 | 0 |
| Added Vol: | 3 | 0 | 1 | 0 | 0 | 0 | 0 | 0 | 3 | 1 | 0 | 0 |
| PasserByVol: | 0 | 0 | 0 | 0 | 0 | 0 | 0 | 0 | 0 | 0 | 0 | 0 |
| Initial Fut: | 74 | 0 | 37 | 0 | 0 | 0 | 0 | 335 | 114 | 50 | 281 | 0 |
| User Adj: | 1.00 | 1.00 | 1.00 | 1.00 | 1.00 | 1.00 | 1.00 | 1.00 | 1.00 | 1.00 | 1.00 | 1.00 |
| PHF Adj: | 1.00 | 1.00 | 1.00 | 1.00 | 1.00 | 1.00 | 1.00 | 1.00 | 1.00 | 1.00 | 1.00 | 1.00 |
| PHF Volume: | 74 | 0 | 37 | 0 | 0 | 0 | 0 | 335 | 114 | 50 | 281 | 0 |
| Reduct Vol: | 0 | 0 | 0 | 0 | 0 | 0 | 0 | 0 | 0 | 0 | 0 | 0 |
| FinalVolume: | 74 | 0 | 37 | 0 | 0 | 0 | 0 | 335 | 114 | 50 | 281 | 0 |
| Critical Gap Module: | | | | | | | | | | | | |
| Critical Gp: | 6.4 | xxxx | 6.2 | xxxxx | xxxx | xxxxx | xxxxx | xxxx | xxxxx | 4.1 | xxxx | xxxxx |
| FollowUpTim: | 3.5 | xxxx | 3.3 | xxxxx | xxxx | xxxxx | xxxxx | xxxx | xxxxx | 2.2 | xxxx | xxxxx |
| Capacity Module: | | | | | | | | | | | | |
| Cnflict Vol: | 772 | xxxx | 392 | xxxx | xxxx | xxxxx | xxxx | xxxx | xxxxx | 449 | xxxx | xxxxx |
| Potent Cap.: | 371 | xxxx | 661 | xxxx | xxxx | xxxxx | xxxx | xxxx | xxxxx | 1122 | xxxx | xxxxx |
| Move Cap.: | 358 | xxxx | 661 | xxxx | xxxx | xxxxx | xxxx | xxxx | xxxxx | 1122 | xxxx | xxxxx |
| Volume/Cap: | 0.21 | xxxx | 0.06 | xxxx | xxxx | xxxx | xxxx | xxxx | xxxx | 0.04 | xxxx | xxxx |
| Level Of Service Module: | | | | | | | | | | | | |
| 2Way95thQ: | 0.8 | xxxx | 0.2 | xxxx | xxxx | xxxxx | xxxx | xxxx | xxxxx | 0.1 | xxxx | xxxxx |
| Control Del: | 17.7 | xxxx | 10.8 | xxxxx | xxxx | xxxxx | xxxxx | xxxx | xxxxx | 8.4 | xxxx | xxxxx |
| LOS by Move: | C | * | B | * | * | * | * | * | * | A | * | * |
| Movement: | LT - LTR - RT | | | LT - LTR - RT | | | LT - LTR - RT | | | LT - LTR - RT | | |
| Shared Cap.: | xxxx | xxxx | xxxxx | xxxx | xxxx | xxxxx | xxxx | xxxx | xxxxx | xxxx | xxxx | xxxxx |
| SharedQueue: | xxxxx | xxxx | xxxxx | xxxxx | xxxx | xxxxx | xxxxx | xxxx | xxxxx | xxxxx | xxxx | xxxxx |
| Shrd ConDel: | xxxxx | xxxx | xxxxx | xxxxx | xxxx | xxxxx | xxxxx | xxxx | xxxxx | xxxxx | xxxx | xxxxx |
| Shared LOS: | * | * | * | * | * | * | * | * | * | * | * | * |
| ApproachDel: | 15.4 | | | xxxxxx | | | xxxxxx | | | xxxxxx | | |
| ApproachLOS: | C | | | * | | | * | | | * | | |

Note: Queue reported is the number of cars per lane.

Valle Verde Home Project
Existing+Ambient+Project (CUP Buildout)
PM Peak Hour

Level Of Service Computation Report
2000 HCM 4-Way Stop Method (Future Volume Alternative)

Intersection #7 Via Senda at Modoc Rd

| | | | |
|---|---|---|---|
| Cycle (sec): | 100 | Critical Vol./Cap.(X): | 0.541 |
| Loss Time (sec): | 0 (Y+R=4.0 sec) | Average Delay (sec/veh): | 12.3 |
| Optimal Cycle: | 0 | Level Of Service: | B |

| Street Name: | Via Senda | | | | | | Modoc Rd | | | | | |
|---|---|---|---|---|---|---|---|---|---|---|---|---|
| Approach: | North Bound | | | South Bound | | | East Bound | | | West Bound | | |
| Movement: | L - | T - | R | L - | T - | R | L - | T - | R | L - | T - | R |
| Control: | Stop Sign | | | Stop Sign | | | Stop Sign | | | Stop Sign | | |
| Rights: | Include | | | Include | | | Include | | | Include | | |
| Min. Green: | 0 | 0 | 0 | 0 | 0 | 0 | 0 | 0 | 0 | 0 | 0 | 0 |
| Lanes: | 0 0 | 1! 0 | 0 | 0 0 | 0 0 | 0 | 0 0 | 0 1 | 0 | 0 1 | 0 0 | 0 |
| Volume Module: | | | | | | | | | | | | |
| Base Vol: | 98 | 0 | 206 | 0 | 0 | 0 | 0 | 188 | 70 | 177 | 179 | 0 |
| Growth Adj: | 1.02 | 1.02 | 1.02 | 1.02 | 1.02 | 1.02 | 1.02 | 1.02 | 1.02 | 1.02 | 1.02 | 1.02 |
| Initial Bse: | 100 | 0 | 210 | 0 | 0 | 0 | 0 | 192 | 71 | 181 | 183 | 0 |
| Added Vol: | 0 | 0 | 3 | 0 | 0 | 0 | 0 | 0 | 0 | 3 | 0 | 0 |
| PasserByVol: | 0 | 0 | 0 | 0 | 0 | 0 | 0 | 0 | 0 | 0 | 0 | 0 |
| Initial Fut: | 100 | 0 | 213 | 0 | 0 | 0 | 0 | 192 | 71 | 184 | 183 | 0 |
| User Adj: | 1.00 | 1.00 | 1.00 | 1.00 | 1.00 | 1.00 | 1.00 | 1.00 | 1.00 | 1.00 | 1.00 | 1.00 |
| PHF Adj: | 1.00 | 1.00 | 1.00 | 1.00 | 1.00 | 1.00 | 1.00 | 1.00 | 1.00 | 1.00 | 1.00 | 1.00 |
| PHF Volume: | 100 | 0 | 213 | 0 | 0 | 0 | 0 | 192 | 71 | 184 | 183 | 0 |
| Reduct Vol: | 0 | 0 | 0 | 0 | 0 | 0 | 0 | 0 | 0 | 0 | 0 | 0 |
| Reduced Vol: | 100 | 0 | 213 | 0 | 0 | 0 | 0 | 192 | 71 | 184 | 183 | 0 |
| PCE Adj: | 1.00 | 1.00 | 1.00 | 1.00 | 1.00 | 1.00 | 1.00 | 1.00 | 1.00 | 1.00 | 1.00 | 1.00 |
| MLF Adj: | 1.00 | 1.00 | 1.00 | 1.00 | 1.00 | 1.00 | 1.00 | 1.00 | 1.00 | 1.00 | 1.00 | 1.00 |
| FinalVolume: | 100 | 0 | 213 | 0 | 0 | 0 | 0 | 192 | 71 | 184 | 183 | 0 |
| Saturation Flow Module: | | | | | | | | | | | | |
| Adjustment: | 1.00 | 1.00 | 1.00 | 1.00 | 1.00 | 1.00 | 1.00 | 1.00 | 1.00 | 1.00 | 1.00 | 1.00 |
| Lanes: | 0.32 | 0.00 | 0.68 | 0.00 | 0.00 | 0.00 | 0.00 | 0.73 | 0.27 | 0.50 | 0.50 | 0.00 |
| Final Sat.: | 216 | 0 | 460 | 0 | 0 | 0 | 0 | 497 | 185 | 340 | 338 | 0 |
| Capacity Analysis Module: | | | | | | | | | | | | |
| Vol/Sat: | 0.46 | xxxx | 0.46 | xxxx | xxxx | xxxx | xxxx | 0.39 | 0.39 | 0.54 | 0.54 | xxxx |
| Crit Moves: | | | **** | | | | | **** | | **** | | |
| Delay/Veh: | 11.9 | 0.0 | 11.9 | 0.0 | 0.0 | 0.0 | 0.0 | 10.9 | 10.9 | 13.7 | 13.7 | 0.0 |
| Delay Adj: | 1.00 | 1.00 | 1.00 | 1.00 | 1.00 | 1.00 | 1.00 | 1.00 | 1.00 | 1.00 | 1.00 | 1.00 |
| AdjDel/Veh: | 11.9 | 0.0 | 11.9 | 0.0 | 0.0 | 0.0 | 0.0 | 10.9 | 10.9 | 13.7 | 13.7 | 0.0 |
| LOS by Move: | B | * | B | * | * | * | * | B | B | B | B | * |
| ApproachDel: | 11.9 | | | xxxxxx | | | 10.9 | | | 13.7 | | |
| Delay Adj: | 1.00 | | | xxxxx | | | 1.00 | | | 1.00 | | |
| ApprAdjDel: | 11.9 | | | xxxxxx | | | 10.9 | | | 13.7 | | |
| LOS by Appr: | B | | | * | | | B | | | B | | |
| AllWayAvgQ: | 0.7 | 0.7 | 0.7 | 0.0 | 0.0 | 0.0 | 0.5 | 0.5 | 0.5 | 1.0 | 1.0 | 1.0 |

Note: Queue reported is the number of cars per lane.

Traffix 7.9.0215 (c) 2008 Dowling Assoc. Licensed to MMA, LONG BEACH, CA

Valle Verde Home Project
Existing+Ambient+Project (CUP Buildout)
PM Peak Hour

Level Of Service Computation Report
2000 HCM 4-Way Stop Method (Future Volume Alternative)

Intersection #8 Via Senda at Las Palmas Dr

| | | | |
|---|---|---|---|
| Cycle (sec): | 100 | Critical Vol./Cap.(X): | 0.473 |
| Loss Time (sec): | 0 (Y+R=4.0 sec) | Average Delay (sec/veh): | 12.2 |
| Optimal Cycle: | 0 | Level Of Service: | B |

| Street Name: | Via Senda | | | | | | Las Palmas Dr | | | | | |
|---|---|---|---|---|---|---|---|---|---|---|---|---|
| Approach: | North Bound | | | South Bound | | | East Bound | | | West Bound | | |
| Movement: | L - | T - | R | L - | T - | R | L - | T - | R | L - | T - | R |
| Control: | Stop Sign | | | Stop Sign | | | Stop Sign | | | Stop Sign | | |
| Rights: | Include | | | Include | | | Include | | | Include | | |
| Min. Green: | 0 | 0 | 0 | 0 | 0 | 0 | 0 | 0 | 0 | 0 | 0 | 0 |
| Lanes: | 0 0 | 0 0 | 0 | 0 0 | 1! 0 | 0 | 0 1 | 0 0 | 0 | 0 0 | 1 0 | 1 |
| Volume Module: | | | | | | | | | | | | |
| Base Vol: | 0 | 0 | 0 | 226 | 0 | 27 | 27 | 274 | 0 | 0 | 271 | 270 |
| Growth Adj: | 1.02 | 1.02 | 1.02 | 1.02 | 1.02 | 1.02 | 1.02 | 1.02 | 1.02 | 1.02 | 1.02 | 1.02 |
| Initial Bse: | 0 | 0 | 0 | 231 | 0 | 28 | 28 | 279 | 0 | 0 | 276 | 275 |
| Added Vol: | 0 | 0 | 0 | 3 | 0 | 0 | 0 | 0 | 0 | 0 | 0 | 3 |
| PasserByVol: | 0 | 0 | 0 | 0 | 0 | 0 | 0 | 0 | 0 | 0 | 0 | 0 |
| Initial Fut: | 0 | 0 | 0 | 234 | 0 | 28 | 28 | 279 | 0 | 0 | 276 | 278 |
| User Adj: | 1.00 | 1.00 | 1.00 | 1.00 | 1.00 | 1.00 | 1.00 | 1.00 | 1.00 | 1.00 | 1.00 | 1.00 |
| PHF Adj: | 1.00 | 1.00 | 1.00 | 1.00 | 1.00 | 1.00 | 1.00 | 1.00 | 1.00 | 1.00 | 1.00 | 1.00 |
| PHF Volume: | 0 | 0 | 0 | 234 | 0 | 28 | 28 | 279 | 0 | 0 | 276 | 278 |
| Reduct Vol: | 0 | 0 | 0 | 0 | 0 | 0 | 0 | 0 | 0 | 0 | 0 | 0 |
| Reduced Vol: | 0 | 0 | 0 | 234 | 0 | 28 | 28 | 279 | 0 | 0 | 276 | 278 |
| PCE Adj: | 1.00 | 1.00 | 1.00 | 1.00 | 1.00 | 1.00 | 1.00 | 1.00 | 1.00 | 1.00 | 1.00 | 1.00 |
| MLF Adj: | 1.00 | 1.00 | 1.00 | 1.00 | 1.00 | 1.00 | 1.00 | 1.00 | 1.00 | 1.00 | 1.00 | 1.00 |
| FinalVolume: | 0 | 0 | 0 | 234 | 0 | 28 | 28 | 279 | 0 | 0 | 276 | 278 |
| Saturation Flow Module: | | | | | | | | | | | | |
| Adjustment: | 1.00 | 1.00 | 1.00 | 1.00 | 1.00 | 1.00 | 1.00 | 1.00 | 1.00 | 1.00 | 1.00 | 1.00 |
| Lanes: | 0.00 | 0.00 | 0.00 | 0.89 | 0.00 | 0.11 | 0.09 | 0.91 | 0.00 | 0.00 | 1.00 | 1.00 |
| Final Sat.: | 0 | 0 | 0 | 529 | 0 | 62 | 58 | 591 | 0 | 0 | 628 | 716 |
| Capacity Analysis Module: | | | | | | | | | | | | |
| Vol/Sat: | xxxx | xxxx | xxxx | 0.44 | xxxx | 0.44 | 0.47 | 0.47 | xxxx | xxxx | 0.44 | 0.39 |
| Crit Moves: | | | | **** | | | | **** | | | **** | |
| Delay/Veh: | 0.0 | 0.0 | 0.0 | 12.9 | 0.0 | 12.9 | 12.9 | 12.9 | 0.0 | 0.0 | 12.5 | 10.6 |
| Delay Adj: | 1.00 | 1.00 | 1.00 | 1.00 | 1.00 | 1.00 | 1.00 | 1.00 | 1.00 | 1.00 | 1.00 | 1.00 |
| AdjDel/Veh: | 0.0 | 0.0 | 0.0 | 12.9 | 0.0 | 12.9 | 12.9 | 12.9 | 0.0 | 0.0 | 12.5 | 10.6 |
| LOS by Move: | * | * | * | B | * | B | B | B | * | * | B | B |
| ApproachDel: | xxxxxx | | | 12.9 | | | 12.9 | | | 11.6 | | |
| Delay Adj: | xxxxx | | | 1.00 | | | 1.00 | | | 1.00 | | |
| ApprAdjDel: | xxxxxx | | | 12.9 | | | 12.9 | | | 11.6 | | |
| LOS by Appr: | * | | | B | | | B | | | B | | |
| AllWayAvgQ: | 0.0 | 0.0 | 0.0 | 0.7 | 0.7 | 0.7 | 0.8 | 0.8 | 0.8 | 0.0 | 0.7 | 0.6 |

Note: Queue reported is the number of cars per lane.

Traffix 7.9.0215 (c) 2008 Dowling Assoc. Licensed to MMA, LONG BEACH, CA

Valle Verde Home Project
Existing+Ambient+Project (CUP Buildout)
PM Peak Hour

Level Of Service Computation Report
ICU 1(Loss as Cycle Length %) Method (Future Volume Alternative)

Intersection #9 Las Palmas/S La Cumbre Rd at US-101 SB Ramps

| | | | |
|---|---|---|---|
| Cycle (sec): | 100 | Critical Vol./Cap.(X): | 0.681 |
| Loss Time (sec): | 10 (Y+R=4.0 sec) | Average Delay (sec/veh): | xxxxxx |
| Optimal Cycle: | 48 | Level Of Service: | B |

| Approach: | North Bound | | | South Bound | | | East Bound | | | West Bound | | |
|---|---|---|---|---|---|---|---|---|---|---|---|---|
| Movement: | L - | T - | R | L - | T - | R | L - | T - | R | L - | T - | R |
| Control: | Protected | | | Protected | | | Protected | | | Protected | | |
| Rights: | Include | | | Include | | | Include | | | Include | | |
| Min. Green: | 0 | 0 | 0 | 0 | 0 | 0 | 0 | 0 | 0 | 0 | 0 | 0 |
| Lanes: | 0 0 | 2 0 | 1 | 2 0 | 1 0 | 0 | 1 1 | 0 0 | 1 | 0 0 | 0 0 | 0 |
| Volume Module: | | | | | | | | | | | | |
| Base Vol: | 0 | 314 | 144 | 599 | 385 | 0 | 604 | 1 | 75 | 0 | 0 | 0 |
| Growth Adj: | 1.02 | 1.02 | 1.02 | 1.02 | 1.02 | 1.02 | 1.02 | 1.02 | 1.02 | 1.02 | 1.02 | 1.02 |
| Initial Bse: | 0 | 320 | 147 | 611 | 393 | 0 | 616 | 1 | 77 | 0 | 0 | 0 |
| Added Vol: | 0 | 3 | 0 | 0 | 0 | 0 | 0 | 0 | 2 | 0 | 0 | 0 |
| PasserByVol: | 0 | 0 | 0 | 0 | 0 | 0 | 0 | 0 | 0 | 0 | 0 | 0 |
| Initial Fut: | 0 | 323 | 147 | 611 | 393 | 0 | 616 | 1 | 79 | 0 | 0 | 0 |
| User Adj: | 1.00 | 1.00 | 1.00 | 1.00 | 1.00 | 1.00 | 1.00 | 1.00 | 1.00 | 1.00 | 1.00 | 1.00 |
| PHF Adj: | 1.00 | 1.00 | 1.00 | 1.00 | 1.00 | 1.00 | 1.00 | 1.00 | 1.00 | 1.00 | 1.00 | 1.00 |
| PHF Volume: | 0 | 323 | 147 | 611 | 393 | 0 | 616 | 1 | 79 | 0 | 0 | 0 |
| Reduct Vol: | 0 | 0 | 0 | 0 | 0 | 0 | 0 | 0 | 0 | 0 | 0 | 0 |
| Reduced Vol: | 0 | 323 | 147 | 611 | 393 | 0 | 616 | 1 | 79 | 0 | 0 | 0 |
| PCE Adj: | 1.00 | 1.00 | 1.00 | 1.00 | 1.00 | 1.00 | 1.00 | 1.00 | 1.00 | 1.00 | 1.00 | 1.00 |
| MLF Adj: | 1.00 | 1.00 | 1.00 | 1.00 | 1.00 | 1.00 | 1.00 | 1.00 | 1.00 | 1.00 | 1.00 | 1.00 |
| FinalVolume: | 0 | 323 | 147 | 611 | 393 | 0 | 616 | 1 | 79 | 0 | 0 | 0 |
| Saturation Flow Module: | | | | | | | | | | | | |
| Sat/Lane: | 1600 | 1600 | 1600 | 1600 | 1600 | 1600 | 1600 | 1600 | 1600 | 1600 | 1600 | 1600 |
| Adjustment: | 1.00 | 1.00 | 1.00 | 0.80 | 1.00 | 1.00 | 0.80 | 1.00 | 1.00 | 1.00 | 1.00 | 1.00 |
| Lanes: | 0.00 | 2.00 | 1.00 | 2.00 | 1.00 | 0.00 | 1.99 | 0.01 | 1.00 | 0.00 | 0.00 | 0.00 |
| Final Sat.: | 0 | 3200 | 1600 | 2560 | 1600 | 0 | 2556 | 5 | 1600 | 0 | 0 | 0 |
| Capacity Analysis Module: | | | | | | | | | | | | |
| Vol/Sat: | 0.00 | 0.10 | 0.09 | 0.24 | 0.25 | 0.00 | 0.24 | 0.19 | 0.05 | 0.00 | 0.00 | 0.00 |
| Crit Moves: | | **** | | **** | | | **** | | | | | |

Valle Verde Home Project
Existing+Ambient+Project (CUP Buildout)
PM Peak Hour

Scenario Report

| | |
|---|---|
| Scenario: | E+A+P Alt2 PM |
| Command: | E+A+P Alt2 PM |
| Volume: | E+A PM |
| Geometry: | Existing |
| Impact Fee: | Default Impact Fee |
| Trip Generation: | PM Peak |
| Trip Distribution: | Trip Distribution |
| Paths: | Default Path |
| Routes: | Default Route |
| Configuration: | E+A+P Alt2 PM |

Valle Verde Home Project
Existing+Ambient+Project (CUP Buildout)
PM Peak Hour

Trip Generation Report

Forecast for PM Peak

| Zone # | Subzone | Amount | Units | Rate In | Rate Out | Trips In | Trips Out | Total Trips | % Of Total |
|---|---|---|---|---|---|---|---|---|---|
| 102 | Project (Val | 1.00 | Residential | 6.00 | 6.00 | 6 | 6 | 12 | 100.0 |
| | Zone 102 Subtotal ..... | | | | | 6 | 6 | 12 | 100.0 |
| TOTAL ..... | | | | | | 6 | 6 | 12 | 100.0 |

Trip Distribution Report

Percent Of Trips Distribution

To Gates

| Zone | 1 | 2 | 3 | 4 | 5 | 7 | 8 | 10 |
|---|---|---|---|---|---|---|---|---|
| 102 | 5.0 | 5.0 | 40.0 | 30.0 | 5.0 | 0.0 | 10.0 | 5.0 |

Valle Verde Home Project
Existing+Ambient+Project (CUP Buildout)
PM Peak Hour

Turning Movement Report
PM Peak

| Volume | Northbound | | | Southbound | | | Eastbound | | | Westbound | | | Total |
|---|---|---|---|---|---|---|---|---|---|---|---|---|---|
| Type | Left | Thru | Right | Left | Thru | Right | Left | Thru | Right | Left | Thru | Right | Volume |
| #6 Calle de los Amigos at Modoc Rd | | | | | | | | | | | | | |
| Base | 71 | 0 | 36 | 0 | 0 | 0 | 0 | 335 | 111 | 49 | 281 | 0 | 882 |
| Added | 3 | 0 | 1 | 0 | 0 | 0 | 0 | 0 | 3 | 1 | 0 | 0 | 8 |
| Total | 74 | 0 | 37 | 0 | 0 | 0 | 0 | 335 | 114 | 50 | 281 | 0 | 890 |
| #7 Via Senda at Modoc Rd | | | | | | | | | | | | | |
| Base | 100 | 0 | 210 | 0 | 0 | 0 | 0 | 192 | 71 | 181 | 183 | 0 | 936 |
| Added | 0 | 0 | 3 | 0 | 0 | 0 | 0 | 0 | 0 | 3 | 0 | 0 | 6 |
| Total | 100 | 0 | 213 | 0 | 0 | 0 | 0 | 192 | 71 | 184 | 183 | 0 | 942 |
| #8 Via Senda at Las Palmas Dr | | | | | | | | | | | | | |
| Base | 0 | 0 | 0 | 231 | 0 | 28 | 28 | 279 | 0 | 0 | 276 | 275 | 1117 |
| Added | 0 | 0 | 0 | 3 | 0 | 0 | 0 | 0 | 0 | 0 | 0 | 3 | 6 |
| Total | 0 | 0 | 0 | 234 | 0 | 28 | 28 | 279 | 0 | 0 | 276 | 278 | 1123 |
| #9 Las Palmas/S La Cumbre Rd at US-101 SB Ramps | | | | | | | | | | | | | |
| Base | 0 | 320 | 147 | 611 | 393 | 0 | 616 | 1 | 77 | 0 | 0 | 0 | 2164 |
| Added | 0 | 3 | 0 | 0 | 0 | 0 | 0 | 0 | 2 | 0 | 0 | 0 | 5 |
| Total | 0 | 323 | 147 | 611 | 393 | 0 | 616 | 1 | 79 | 0 | 0 | 0 | 2169 |

Valle Verde Home Project
Existing+Ambient+Project (CUP Buildout)
PM Peak Hour

Impact Analysis Report
Level Of Service

| Intersection | Base LOS | Base Del/ Veh | Base V/ C | Future LOS | Future Del/ Veh | Future V/ C | Change in |
|---|---|---|---|---|---|---|---|
| # 6 Calle de los Amigos at Modoc R | C | 15.2 | 0.000 | C | 15.4 | 0.000 | + 0.172 D/V |
| # 7 Via Senda at Modoc Rd | B | 12.2 | 0.535 | B | 12.3 | 0.541 | + 0.005 V/C |
| # 8 Via Senda at Las Palmas Dr | B | 12.2 | 0.471 | B | 12.2 | 0.473 | + 0.002 V/C |
| # 9 Las Palmas/S La Cumbre Rd at | C | 27.5 | 0.601 | C | 27.5 | 0.602 | + 0.007 D/V |

Traffix 7.9.0215 (c) 2008 Dowling Assoc. Licensed to MMA, LONG BEACH, CA

Valle Verde Home Project
Existing+Ambient+Project (CUP Buildout)
PM Peak Hour

Level Of Service Computation Report
2000 HCM Unsignalized Method (Future Volume Alternative)

Intersection #6 Calle de los Amigos at Modoc Rd

Average Delay (sec/veh): 2.4 Worst Case Level Of Service: C[ 15.4]

| Street Name: | Calle de los Amigos | | | | | | | | | Modoc Rd | | |
|---|---|---|---|---|---|---|---|---|---|---|---|---|
| Approach: | North Bound | | | South Bound | | | East Bound | | | West Bound | | |
| Movement: | L - T - R | | | L - T - R | | | L - T - R | | | L - T - R | | |
| Control: | Stop Sign | | | Stop Sign | | | Uncontrolled | | | Uncontrolled | | |
| Rights: | Include | | | Include | | | Include | | | Include | | |
| Lanes: | 1 0 0 0 1 | | | 0 0 0 0 0 | | | 0 0 0 1 0 | | | 1 0 1 0 0 | | |
| Volume Module: | | | | | | | | | | | | |
| Base Vol: | 70 | 0 | 35 | 0 | 0 | 0 | 0 | 328 | 109 | 48 | 275 | 0 |
| Growth Adj: | 1.02 | 1.02 | 1.02 | 1.02 | 1.02 | 1.02 | 1.02 | 1.02 | 1.02 | 1.02 | 1.02 | 1.02 |
| Initial Bse: | 71 | 0 | 36 | 0 | 0 | 0 | 0 | 335 | 111 | 49 | 281 | 0 |
| Added Vol: | 3 | 0 | 1 | 0 | 0 | 0 | 0 | 0 | 3 | 1 | 0 | 0 |
| PasserByVol: | 0 | 0 | 0 | 0 | 0 | 0 | 0 | 0 | 0 | 0 | 0 | 0 |
| Initial Fut: | 74 | 0 | 37 | 0 | 0 | 0 | 0 | 335 | 114 | 50 | 281 | 0 |
| User Adj: | 1.00 | 1.00 | 1.00 | 1.00 | 1.00 | 1.00 | 1.00 | 1.00 | 1.00 | 1.00 | 1.00 | 1.00 |
| PHF Adj: | 1.00 | 1.00 | 1.00 | 1.00 | 1.00 | 1.00 | 1.00 | 1.00 | 1.00 | 1.00 | 1.00 | 1.00 |
| PHF Volume: | 74 | 0 | 37 | 0 | 0 | 0 | 0 | 335 | 114 | 50 | 281 | 0 |
| Reduct Vol: | 0 | 0 | 0 | 0 | 0 | 0 | 0 | 0 | 0 | 0 | 0 | 0 |
| FinalVolume: | 74 | 0 | 37 | 0 | 0 | 0 | 0 | 335 | 114 | 50 | 281 | 0 |
| Critical Gap Module: | | | | | | | | | | | | |
| Critical Gp: | 6.4 | xxxx | 6.2 | xxxxx | xxxx | xxxxx | xxxxx | xxxx | xxxxx | 4.1 | xxxx | xxxxx |
| FollowUpTim: | 3.5 | xxxx | 3.3 | xxxxx | xxxx | xxxxx | xxxxx | xxxx | xxxxx | 2.2 | xxxx | xxxxx |
| Capacity Module: | | | | | | | | | | | | |
| Cnflict Vol: | 772 | xxxx | 392 | xxxx | xxxx | xxxxx | xxxx | xxxx | xxxxx | 449 | xxxx | xxxxx |
| Potent Cap.: | 371 | xxxx | 661 | xxxx | xxxx | xxxxx | xxxx | xxxx | xxxxx | 1122 | xxxx | xxxxx |
| Move Cap.: | 358 | xxxx | 661 | xxxx | xxxx | xxxxx | xxxx | xxxx | xxxxx | 1122 | xxxx | xxxxx |
| Volume/Cap: | 0.21 | xxxx | 0.06 | xxxx | xxxx | xxxx | xxxx | xxxx | xxxx | 0.04 | xxxx | xxxx |
| Level Of Service Module: | | | | | | | | | | | | |
| 2Way95thQ: | 0.8 | xxxx | 0.2 | xxxx | xxxx | xxxxx | xxxx | xxxx | xxxxx | 0.1 | xxxx | xxxxx |
| Control Del: | 17.7 | xxxx | 10.8 | xxxxx | xxxx | xxxxx | xxxxx | xxxx | xxxxx | 8.4 | xxxx | xxxxx |
| LOS by Move: | C | * | B | * | * | * | * | * | * | A | * | * |
| Movement: | LT - LTR - RT | | | LT - LTR - RT | | | LT - LTR - RT | | | LT - LTR - RT | | |
| Shared Cap.: | xxxx | xxxx | xxxxx | xxxx | xxxx | xxxxx | xxxx | xxxx | xxxxx | xxxx | xxxx | xxxxx |
| SharedQueue: | xxxxx | xxxx | xxxxx | xxxxx | xxxx | xxxxx | xxxxx | xxxx | xxxxx | xxxxx | xxxx | xxxxx |
| Shrd ConDel: | xxxxx | xxxx | xxxxx | xxxxx | xxxx | xxxxx | xxxxx | xxxx | xxxxx | xxxxx | xxxx | xxxxx |
| Shared LOS: | * | * | * | * | * | * | * | * | * | * | * | * |
| ApproachDel: | 15.4 | | | xxxxxx | | | xxxxxx | | | xxxxxx | | |
| ApproachLOS: | C | | | * | | | * | | | * | | |

Note: Queue reported is the number of cars per lane.

Valle Verde Home Project
Existing+Ambient+Project (CUP Buildout)
PM Peak Hour

Level Of Service Computation Report
2000 HCM 4-Way Stop Method (Future Volume Alternative)

Intersection #7 Via Senda at Modoc Rd

| | | | |
|---|---|---|---|
| Cycle (sec): | 100 | Critical Vol./Cap.(X): | 0.541 |
| Loss Time (sec): | 0 (Y+R=4.0 sec) | Average Delay (sec/veh): | 12.3 |
| Optimal Cycle: | 0 | Level Of Service: | B |

| Street Name: | Via Senda | | | | | | Modoc Rd | | | | | |
|---|---|---|---|---|---|---|---|---|---|---|---|---|
| Approach: | North Bound | | | South Bound | | | East Bound | | | West Bound | | |
| Movement: | L - | T - | R | L - | T - | R | L - | T - | R | L - | T - | R |
| Control: | Stop Sign | | | Stop Sign | | | Stop Sign | | | Stop Sign | | |
| Rights: | Include | | | Include | | | Include | | | Include | | |
| Min. Green: | 0 | 0 | 0 | 0 | 0 | 0 | 0 | 0 | 0 | 0 | 0 | 0 |
| Lanes: | 0 0 | 1! 0 | 0 | 0 0 | 0 0 | 0 | 0 0 | 0 1 | 0 | 0 1 | 0 0 | 0 |
| Volume Module: | | | | | | | | | | | | |
| Base Vol: | 98 | 0 | 206 | 0 | 0 | 0 | 0 | 188 | 70 | 177 | 179 | 0 |
| Growth Adj: | 1.02 | 1.02 | 1.02 | 1.02 | 1.02 | 1.02 | 1.02 | 1.02 | 1.02 | 1.02 | 1.02 | 1.02 |
| Initial Bse: | 100 | 0 | 210 | 0 | 0 | 0 | 0 | 192 | 71 | 181 | 183 | 0 |
| Added Vol: | 0 | 0 | 3 | 0 | 0 | 0 | 0 | 0 | 0 | 3 | 0 | 0 |
| PasserByVol: | 0 | 0 | 0 | 0 | 0 | 0 | 0 | 0 | 0 | 0 | 0 | 0 |
| Initial Fut: | 100 | 0 | 213 | 0 | 0 | 0 | 0 | 192 | 71 | 184 | 183 | 0 |
| User Adj: | 1.00 | 1.00 | 1.00 | 1.00 | 1.00 | 1.00 | 1.00 | 1.00 | 1.00 | 1.00 | 1.00 | 1.00 |
| PHF Adj: | 1.00 | 1.00 | 1.00 | 1.00 | 1.00 | 1.00 | 1.00 | 1.00 | 1.00 | 1.00 | 1.00 | 1.00 |
| PHF Volume: | 100 | 0 | 213 | 0 | 0 | 0 | 0 | 192 | 71 | 184 | 183 | 0 |
| Reduct Vol: | 0 | 0 | 0 | 0 | 0 | 0 | 0 | 0 | 0 | 0 | 0 | 0 |
| Reduced Vol: | 100 | 0 | 213 | 0 | 0 | 0 | 0 | 192 | 71 | 184 | 183 | 0 |
| PCE Adj: | 1.00 | 1.00 | 1.00 | 1.00 | 1.00 | 1.00 | 1.00 | 1.00 | 1.00 | 1.00 | 1.00 | 1.00 |
| MLF Adj: | 1.00 | 1.00 | 1.00 | 1.00 | 1.00 | 1.00 | 1.00 | 1.00 | 1.00 | 1.00 | 1.00 | 1.00 |
| FinalVolume: | 100 | 0 | 213 | 0 | 0 | 0 | 0 | 192 | 71 | 184 | 183 | 0 |
| Saturation Flow Module: | | | | | | | | | | | | |
| Adjustment: | 1.00 | 1.00 | 1.00 | 1.00 | 1.00 | 1.00 | 1.00 | 1.00 | 1.00 | 1.00 | 1.00 | 1.00 |
| Lanes: | 0.32 | 0.00 | 0.68 | 0.00 | 0.00 | 0.00 | 0.00 | 0.73 | 0.27 | 0.50 | 0.50 | 0.00 |
| Final Sat.: | 216 | 0 | 460 | 0 | 0 | 0 | 0 | 497 | 185 | 340 | 338 | 0 |
| Capacity Analysis Module: | | | | | | | | | | | | |
| Vol/Sat: | 0.46 | xxxx | 0.46 | xxxx | xxxx | xxxx | xxxx | 0.39 | 0.39 | 0.54 | 0.54 | xxxx |
| Crit Moves: | | | **** | | | | | **** | | **** | | |
| Delay/Veh: | 11.9 | 0.0 | 11.9 | 0.0 | 0.0 | 0.0 | 0.0 | 10.9 | 10.9 | 13.7 | 13.7 | 0.0 |
| Delay Adj: | 1.00 | 1.00 | 1.00 | 1.00 | 1.00 | 1.00 | 1.00 | 1.00 | 1.00 | 1.00 | 1.00 | 1.00 |
| AdjDel/Veh: | 11.9 | 0.0 | 11.9 | 0.0 | 0.0 | 0.0 | 0.0 | 10.9 | 10.9 | 13.7 | 13.7 | 0.0 |
| LOS by Move: | B | * | B | * | * | * | * | B | B | B | B | * |
| ApproachDel: | 11.9 | | | xxxxxx | | | 10.9 | | | 13.7 | | |
| Delay Adj: | 1.00 | | | xxxxx | | | 1.00 | | | 1.00 | | |
| ApprAdjDel: | 11.9 | | | xxxxxx | | | 10.9 | | | 13.7 | | |
| LOS by Appr: | B | | | * | | | B | | | B | | |
| AllWayAvgQ: | 0.7 | 0.7 | 0.7 | 0.0 | 0.0 | 0.0 | 0.5 | 0.5 | 0.5 | 1.0 | 1.0 | 1.0 |

Note: Queue reported is the number of cars per lane.

Traffix 7.9.0215 (c) 2008 Dowling Assoc. Licensed to MMA, LONG BEACH, CA

Valle Verde Home Project
Existing+Ambient+Project (CUP Buildout)
PM Peak Hour

Level Of Service Computation Report
2000 HCM 4-Way Stop Method (Future Volume Alternative)

Intersection #8 Via Senda at Las Palmas Dr

| | | | |
|---|---|---|---|
| Cycle (sec): | 100 | Critical Vol./Cap.(X): | 0.473 |
| Loss Time (sec): | 0 (Y+R=4.0 sec) | Average Delay (sec/veh): | 12.2 |
| Optimal Cycle: | 0 | Level Of Service: | B |

| Street Name: | Via Senda | | | | | | Las Palmas Dr | | | | | |
|---|---|---|---|---|---|---|---|---|---|---|---|---|
| Approach: | North Bound | | | South Bound | | | East Bound | | | West Bound | | |
| Movement: | L - | T - | R | L - | T - | R | L - | T - | R | L - | T - | R |
| Control: | Stop Sign | | | Stop Sign | | | Stop Sign | | | Stop Sign | | |
| Rights: | Include | | | Include | | | Include | | | Include | | |
| Min. Green: | 0 | 0 | 0 | 0 | 0 | 0 | 0 | 0 | 0 | 0 | 0 | 0 |
| Lanes: | 0 0 | 0 0 | 0 | 0 0 | 1! 0 | 0 | 0 1 | 0 0 | 0 | 0 0 | 1 0 | 1 |
| Volume Module: | | | | | | | | | | | | |
| Base Vol: | 0 | 0 | 0 | 226 | 0 | 27 | 27 | 274 | 0 | 0 | 271 | 270 |
| Growth Adj: | 1.02 | 1.02 | 1.02 | 1.02 | 1.02 | 1.02 | 1.02 | 1.02 | 1.02 | 1.02 | 1.02 | 1.02 |
| Initial Bse: | 0 | 0 | 0 | 231 | 0 | 28 | 28 | 279 | 0 | 0 | 276 | 275 |
| Added Vol: | 0 | 0 | 0 | 3 | 0 | 0 | 0 | 0 | 0 | 0 | 0 | 3 |
| PasserByVol: | 0 | 0 | 0 | 0 | 0 | 0 | 0 | 0 | 0 | 0 | 0 | 0 |
| Initial Fut: | 0 | 0 | 0 | 234 | 0 | 28 | 28 | 279 | 0 | 0 | 276 | 278 |
| User Adj: | 1.00 | 1.00 | 1.00 | 1.00 | 1.00 | 1.00 | 1.00 | 1.00 | 1.00 | 1.00 | 1.00 | 1.00 |
| PHF Adj: | 1.00 | 1.00 | 1.00 | 1.00 | 1.00 | 1.00 | 1.00 | 1.00 | 1.00 | 1.00 | 1.00 | 1.00 |
| PHF Volume: | 0 | 0 | 0 | 234 | 0 | 28 | 28 | 279 | 0 | 0 | 276 | 278 |
| Reduct Vol: | 0 | 0 | 0 | 0 | 0 | 0 | 0 | 0 | 0 | 0 | 0 | 0 |
| Reduced Vol: | 0 | 0 | 0 | 234 | 0 | 28 | 28 | 279 | 0 | 0 | 276 | 278 |
| PCE Adj: | 1.00 | 1.00 | 1.00 | 1.00 | 1.00 | 1.00 | 1.00 | 1.00 | 1.00 | 1.00 | 1.00 | 1.00 |
| MLF Adj: | 1.00 | 1.00 | 1.00 | 1.00 | 1.00 | 1.00 | 1.00 | 1.00 | 1.00 | 1.00 | 1.00 | 1.00 |
| FinalVolume: | 0 | 0 | 0 | 234 | 0 | 28 | 28 | 279 | 0 | 0 | 276 | 278 |
| Saturation Flow Module: | | | | | | | | | | | | |
| Adjustment: | 1.00 | 1.00 | 1.00 | 1.00 | 1.00 | 1.00 | 1.00 | 1.00 | 1.00 | 1.00 | 1.00 | 1.00 |
| Lanes: | 0.00 | 0.00 | 0.00 | 0.89 | 0.00 | 0.11 | 0.09 | 0.91 | 0.00 | 0.00 | 1.00 | 1.00 |
| Final Sat.: | 0 | 0 | 0 | 529 | 0 | 62 | 58 | 591 | 0 | 0 | 628 | 716 |
| Capacity Analysis Module: | | | | | | | | | | | | |
| Vol/Sat: | xxxx | xxxx | xxxx | 0.44 | xxxx | 0.44 | 0.47 | 0.47 | xxxx | xxxx | 0.44 | 0.39 |
| Crit Moves: | | | | **** | | | | **** | | | **** | |
| Delay/Veh: | 0.0 | 0.0 | 0.0 | 12.9 | 0.0 | 12.9 | 12.9 | 12.9 | 0.0 | 0.0 | 12.5 | 10.6 |
| Delay Adj: | 1.00 | 1.00 | 1.00 | 1.00 | 1.00 | 1.00 | 1.00 | 1.00 | 1.00 | 1.00 | 1.00 | 1.00 |
| AdjDel/Veh: | 0.0 | 0.0 | 0.0 | 12.9 | 0.0 | 12.9 | 12.9 | 12.9 | 0.0 | 0.0 | 12.5 | 10.6 |
| LOS by Move: | * | * | * | B | * | B | B | B | * | * | B | B |
| ApproachDel: | xxxxxx | | | 12.9 | | | 12.9 | | | 11.6 | | |
| Delay Adj: | xxxxx | | | 1.00 | | | 1.00 | | | 1.00 | | |
| ApprAdjDel: | xxxxxx | | | 12.9 | | | 12.9 | | | 11.6 | | |
| LOS by Appr: | * | | | B | | | B | | | B | | |
| AllWayAvgQ: | 0.0 | 0.0 | 0.0 | 0.7 | 0.7 | 0.7 | 0.8 | 0.8 | 0.8 | 0.0 | 0.7 | 0.6 |

Note: Queue reported is the number of cars per lane.

Traffix 7.9.0215 (c) 2008 Dowling Assoc. Licensed to MMA, LONG BEACH, CA

Valle Verde Home Project
Existing+Ambient+Project (CUP Buildout)
PM Peak Hour

Level Of Service Computation Report
2000 HCM Operations Method (Future Volume Alternative)

Intersection #9 Las Positas/S La Cumbre Rd at US-101 SB Ramps

| | | | |
|---|---|---|---|
| Cycle (sec): | 100 | Critical Vol./Cap.(X): | 0.602 |
| Loss Time (sec): | 10 (Y+R=4.0 sec) | Average Delay (sec/veh): | 27.5 |
| Optimal Cycle: | 44 | Level Of Service: | C |

| Approach: | North Bound | | | South Bound | | | East Bound | | | West Bound | | |
|---|---|---|---|---|---|---|---|---|---|---|---|---|
| Movement: | L | T | R | L | T | R | L | T | R | L | T | R |
| Control: | Protected | | | Protected | | | Protected | | | Protected | | |
| Rights: | Include | | | Include | | | Include | | | Include | | |
| Min. Green: | 0 | 0 | 0 | 0 | 0 | 0 | 0 | 0 | 0 | 0 | 0 | 0 |
| Lanes: | 0 0 2 | 0 | 1 | 2 0 | 1 0 | 0 | 1 1 | 0 0 | 1 | 0 0 | 0 0 | 0 |
| Volume Module: | | | | | | | | | | | | |
| Base Vol: | 0 | 314 | 144 | 599 | 385 | 0 | 604 | 1 | 75 | 0 | 0 | 0 |
| Growth Adj: | 1.02 | 1.02 | 1.02 | 1.02 | 1.02 | 1.02 | 1.02 | 1.02 | 1.02 | 1.02 | 1.02 | 1.02 |
| Initial Bse: | 0 | 320 | 147 | 611 | 393 | 0 | 616 | 1 | 77 | 0 | 0 | 0 |
| Added Vol: | 0 | 3 | 0 | 0 | 0 | 0 | 0 | 0 | 2 | 0 | 0 | 0 |
| PasserByVol: | 0 | 0 | 0 | 0 | 0 | 0 | 0 | 0 | 0 | 0 | 0 | 0 |
| Initial Fut: | 0 | 323 | 147 | 611 | 393 | 0 | 616 | 1 | 79 | 0 | 0 | 0 |
| User Adj: | 1.00 | 1.00 | 1.00 | 1.00 | 1.00 | 1.00 | 1.00 | 1.00 | 1.00 | 1.00 | 1.00 | 1.00 |
| PHF Adj: | 1.00 | 1.00 | 1.00 | 1.00 | 1.00 | 1.00 | 1.00 | 1.00 | 1.00 | 1.00 | 1.00 | 1.00 |
| PHF Volume: | 0 | 323 | 147 | 611 | 393 | 0 | 616 | 1 | 79 | 0 | 0 | 0 |
| Reduct Vol: | 0 | 0 | 0 | 0 | 0 | 0 | 0 | 0 | 0 | 0 | 0 | 0 |
| Reduced Vol: | 0 | 323 | 147 | 611 | 393 | 0 | 616 | 1 | 79 | 0 | 0 | 0 |
| PCE Adj: | 1.00 | 1.00 | 1.00 | 1.00 | 1.00 | 1.00 | 1.00 | 1.00 | 1.00 | 1.00 | 1.00 | 1.00 |
| MLF Adj: | 1.00 | 1.00 | 1.00 | 1.00 | 1.00 | 1.00 | 1.00 | 1.00 | 1.00 | 1.00 | 1.00 | 1.00 |
| FinalVolume: | 0 | 323 | 147 | 611 | 393 | 0 | 616 | 1 | 79 | 0 | 0 | 0 |
| Saturation Flow Module: | | | | | | | | | | | | |
| Sat/Lane: | 1900 | 1900 | 1900 | 1900 | 1900 | 1900 | 1900 | 1900 | 1900 | 1900 | 1900 | 1900 |
| Adjustment: | 1.00 | 0.95 | 0.85 | 0.74 | 1.00 | 1.00 | 0.69 | 0.87 | 0.85 | 1.00 | 1.00 | 1.00 |
| Lanes: | 0.00 | 2.00 | 1.00 | 2.00 | 1.00 | 0.00 | 1.99 | 0.01 | 1.00 | 0.00 | 0.00 | 0.00 |
| Final Sat.: | 0 | 3610 | 1615 | 2801 | 1900 | 0 | 2632 | 4 | 1615 | 0 | 0 | 0 |
| Capacity Analysis Module: | | | | | | | | | | | | |
| Vol/Sat: | 0.00 | 0.09 | 0.09 | 0.22 | 0.21 | 0.00 | 0.23 | 0.23 | 0.05 | 0.00 | 0.00 | 0.00 |
| Crit Moves: | | **** | | **** | | | **** | | | | | |
| Green/Cycle: | 0.00 | 0.15 | 0.15 | 0.36 | 0.51 | 0.00 | 0.39 | 0.39 | 0.39 | 0.00 | 0.00 | 0.00 |
| Volume/Cap: | 0.00 | 0.60 | 0.61 | 0.60 | 0.40 | 0.00 | 0.60 | 0.60 | 0.12 | 0.00 | 0.00 | 0.00 |
| Delay/Veh: | 0.0 | 41.7 | 44.4 | 27.0 | 15.3 | 0.0 | 25.4 | 25.4 | 19.7 | 0.0 | 0.0 | 0.0 |
| User DelAdj: | 1.00 | 1.00 | 1.00 | 1.00 | 1.00 | 1.00 | 1.00 | 1.00 | 1.00 | 1.00 | 1.00 | 1.00 |
| AdjDel/Veh: | 0.0 | 41.7 | 44.4 | 27.0 | 15.3 | 0.0 | 25.4 | 25.4 | 19.7 | 0.0 | 0.0 | 0.0 |
| LOS by Move: | A | D | D | C | B | A | C | C | B | A | A | A |
| HCM2kAvgQ: | 0 | 6 | 5 | 9 | 7 | 0 | 8 | 10 | 2 | 0 | 0 | 0 |

Note: Queue reported is the number of cars per lane.

# FUTURE WITH PROJECT
# LOS WORKSHEETS

# WEEKDAY AM PEAK HOUR

Valle Verde Home Project
Existing+Ambient+Project (Proposed Project)
AM Peak Hour

Scenario Report

| | |
|---|---|
| Scenario: | E+A+P Alt1 AM |
| Command: | E+A+P Alt1 AM |
| Volume: | E+A AM |
| Geometry: | Existing |
| Impact Fee: | Default Impact Fee |
| Trip Generation: | AM Peak |
| Trip Distribution: | Trip Distribution |
| Paths: | Default Path |
| Routes: | Default Route |
| Configuration: | E+A+P Alt1 AM |

Valle Verde Home Project
Existing+Ambient+Project (Proposed Project)
AM Peak Hour

Trip Generation Report

Forecast for AM Peak

| Zone # | Subzone | Amount | Units | Rate In | Rate Out | Trips In | Trips Out | Total Trips | % Of Total |
|---|---|---|---|---|---|---|---|---|---|
| 101 | Project (Val | 1.00 | Residential | 4.00 | 4.00 | 4 | 4 | 8 | 100.0 |
| | Zone 101 Subtotal ..... | | | | | 4 | 4 | 8 | 100.0 |
| TOTAL ..... | | | | | | 4 | 4 | 8 | 100.0 |

Trip Distribution Report

Percent Of Trips Distribution

| Zone | To Gates 1 | 2 | 3 | 4 | 5 | 7 | 8 | 10 |
|---|---|---|---|---|---|---|---|---|
| 101 | 5.0 | 5.0 | 40.0 | 30.0 | 5.0 | 0.0 | 10.0 | 5.0 |

Valle Verde Home Project
Existing+Ambient+Project (Proposed Project)
AM Peak Hour

Turning Movement Report
AM Peak

| Volume | Northbound | | | Southbound | | | Eastbound | | | Westbound | | | Total |
|---|---|---|---|---|---|---|---|---|---|---|---|---|---|
| Type | Left | Thru | Right | Left | Thru | Right | Left | Thru | Right | Left | Thru | Right | Volume |
| #6 Calle de los Amigos at Modoc Rd | | | | | | | | | | | | | |
| Base | 98 | 0 | 46 | 0 | 0 | 0 | 0 | 198 | 53 | 19 | 312 | 0 | 726 |
| Added | 2 | 0 | 1 | 0 | 0 | 0 | 0 | 0 | 2 | 1 | 0 | 0 | 6 |
| Total | 100 | 0 | 47 | 0 | 0 | 0 | 0 | 198 | 55 | 20 | 312 | 0 | 732 |
| #7 Via Senda at Modoc Rd | | | | | | | | | | | | | |
| Base | 38 | 0 | 139 | 0 | 0 | 0 | 0 | 118 | 96 | 179 | 134 | 0 | 703 |
| Added | 0 | 0 | 2 | 0 | 0 | 0 | 0 | 0 | 0 | 2 | 0 | 0 | 4 |
| Total | 38 | 0 | 141 | 0 | 0 | 0 | 0 | 118 | 96 | 181 | 134 | 0 | 707 |
| #8 Via Senda at Las Palmas Dr | | | | | | | | | | | | | |
| Base | 0 | 0 | 0 | 242 | 0 | 35 | 27 | 289 | 0 | 0 | 344 | 149 | 1084 |
| Added | 0 | 0 | 0 | 2 | 0 | 0 | 0 | 0 | 0 | 0 | 0 | 2 | 4 |
| Total | 0 | 0 | 0 | 244 | 0 | 35 | 27 | 289 | 0 | 0 | 344 | 151 | 1088 |
| #9 Las Palmas/S La Cumbre Rd at US-101 SB Ramps | | | | | | | | | | | | | |
| Base | 0 | 430 | 244 | 458 | 393 | 0 | 467 | 5 | 112 | 0 | 0 | 0 | 2109 |
| Added | 0 | 2 | 0 | 0 | 0 | 0 | 0 | 0 | 2 | 0 | 0 | 0 | 4 |
| Total | 0 | 432 | 244 | 458 | 393 | 0 | 467 | 5 | 114 | 0 | 0 | 0 | 2113 |

Valle Verde Home Project
Existing+Ambient+Project (Proposed Project)
AM Peak Hour

Impact Analysis Report
Level Of Service

| Intersection | Base LOS | Base Del/ Veh | Base V/ C | Future LOS | Future Del/ Veh | Future V/ C | Change in |
|---|---|---|---|---|---|---|---|
| # 6 Calle de los Amigos at Modoc R | B | 12.9 | 0.000 | B | 13.0 | 0.000 | + 0.074 D/V |
| # 7 Via Senda at Modoc Rd | A | 9.7 | 0.415 | A | 9.8 | 0.418 | + 0.003 V/C |
| # 8 Via Senda at Las Palmas Dr | B | 13.2 | 0.554 | B | 13.2 | 0.555 | + 0.001 V/C |
| # 9 Las Palmas/S La Cumbre Rd at | B | xxxxx | 0.616 | B | xxxxx | 0.616 | + 0.000 V/C |

Traffix 7.9.0215 (c) 2008 Dowling Assoc. Licensed to MMA, LONG BEACH, CA

Valle Verde Home Project
Existing+Ambient+Project (Proposed Project)
AM Peak Hour

Level Of Service Computation Report
2000 HCM Unsignalized Method (Future Volume Alternative)

Intersection #6 Calle de los Amigos at Modoc Rd

Average Delay (sec/veh): 2.8  Worst Case Level Of Service: B[ 13.0]

| Street Name: | Calle de los Amigos | | | | | | | | | Modoc Rd | | |
|---|---|---|---|---|---|---|---|---|---|---|---|---|
| Approach: | North Bound | | | South Bound | | | East Bound | | | West Bound | | |
| Movement: | L - T - R | | | L - T - R | | | L - T - R | | | L - T - R | | |
| Control: | Stop Sign | | | Stop Sign | | | Uncontrolled | | | Uncontrolled | | |
| Rights: | Include | | | Include | | | Include | | | Include | | |
| Lanes: | 1 0 0 0 1 | | | 0 0 0 0 0 | | | 0 0 0 1 0 | | | 1 0 1 0 0 | | |
| Volume Module: | | | | | | | | | | | | |
| Base Vol: | 96 | 0 | 45 | 0 | 0 | 0 | 0 | 194 | 52 | 19 | 306 | 0 |
| Growth Adj: | 1.02 | 1.02 | 1.02 | 1.02 | 1.02 | 1.02 | 1.02 | 1.02 | 1.02 | 1.02 | 1.02 | 1.02 |
| Initial Bse: | 98 | 0 | 46 | 0 | 0 | 0 | 0 | 198 | 53 | 19 | 312 | 0 |
| Added Vol: | 2 | 0 | 1 | 0 | 0 | 0 | 0 | 0 | 2 | 1 | 0 | 0 |
| PasserByVol: | 0 | 0 | 0 | 0 | 0 | 0 | 0 | 0 | 0 | 0 | 0 | 0 |
| Initial Fut: | 100 | 0 | 47 | 0 | 0 | 0 | 0 | 198 | 55 | 20 | 312 | 0 |
| User Adj: | 1.00 | 1.00 | 1.00 | 1.00 | 1.00 | 1.00 | 1.00 | 1.00 | 1.00 | 1.00 | 1.00 | 1.00 |
| PHF Adj: | 1.00 | 1.00 | 1.00 | 1.00 | 1.00 | 1.00 | 1.00 | 1.00 | 1.00 | 1.00 | 1.00 | 1.00 |
| PHF Volume: | 100 | 0 | 47 | 0 | 0 | 0 | 0 | 198 | 55 | 20 | 312 | 0 |
| Reduct Vol: | 0 | 0 | 0 | 0 | 0 | 0 | 0 | 0 | 0 | 0 | 0 | 0 |
| FinalVolume: | 100 | 0 | 47 | 0 | 0 | 0 | 0 | 198 | 55 | 20 | 312 | 0 |
| Critical Gap Module: | | | | | | | | | | | | |
| Critical Gp: | 6.4 | xxxx | 6.2 | xxxxx | xxxx | xxxxx | xxxxx | xxxx | xxxxx | 4.1 | xxxx | xxxxx |
| FollowUpTim: | 3.5 | xxxx | 3.3 | xxxxx | xxxx | xxxxx | xxxxx | xxxx | xxxxx | 2.2 | xxxx | xxxxx |
| Capacity Module: | | | | | | | | | | | | |
| Cnflict Vol: | 578 | xxxx | 225 | xxxx | xxxx | xxxxx | xxxx | xxxx | xxxxx | 253 | xxxx | xxxxx |
| Potent Cap.: | 481 | xxxx | 819 | xxxx | xxxx | xxxxx | xxxx | xxxx | xxxxx | 1324 | xxxx | xxxxx |
| Move Cap.: | 475 | xxxx | 819 | xxxx | xxxx | xxxxx | xxxx | xxxx | xxxxx | 1324 | xxxx | xxxxx |
| Volume/Cap: | 0.21 | xxxx | 0.06 | xxxx | xxxx | xxxx | xxxx | xxxx | xxxx | 0.02 | xxxx | xxxx |
| Level Of Service Module: | | | | | | | | | | | | |
| 2Way95thQ: | 0.8 | xxxx | 0.2 | xxxx | xxxx | xxxxx | xxxx | xxxx | xxxxx | 0.0 | xxxx | xxxxx |
| Control Del: | 14.6 | xxxx | 9.7 | xxxxx | xxxx | xxxxx | xxxxx | xxxx | xxxxx | 7.8 | xxxx | xxxxx |
| LOS by Move: | B | * | A | * | * | * | * | * | * | A | * | * |
| Movement: | LT - LTR - RT | | | LT - LTR - RT | | | LT - LTR - RT | | | LT - LTR - RT | | |
| Shared Cap.: | xxxx | xxxx | xxxxx | xxxx | xxxx | xxxxx | xxxx | xxxx | xxxxx | xxxx | xxxx | xxxxx |
| SharedQueue: | xxxxx | xxxx | xxxxx | xxxxx | xxxx | xxxxx | xxxxx | xxxx | xxxxx | xxxxx | xxxx | xxxxx |
| Shrd ConDel: | xxxxx | xxxx | xxxxx | xxxxx | xxxx | xxxxx | xxxxx | xxxx | xxxxx | xxxxx | xxxx | xxxxx |
| Shared LOS: | * | * | * | * | * | * | * | * | * | * | * | * |
| ApproachDel: | 13.0 | | | xxxxxx | | | xxxxxx | | | xxxxxx | | |
| ApproachLOS: | B | | | * | | | * | | | * | | |

Note: Queue reported is the number of cars per lane.

Valle Verde Home Project
Existing+Ambient+Project (Proposed Project)
AM Peak Hour

Level Of Service Computation Report
2000 HCM 4-Way Stop Method (Future Volume Alternative)

Intersection #7 Via Senda at Modoc Rd

Cycle (sec): 100 | Critical Vol./Cap.(X): 0.418
Loss Time (sec): 0 (Y+R=4.0 sec) | Average Delay (sec/veh): 9.8
Optimal Cycle: 0 | Level Of Service: A

| Street Name: | Via Senda | | | | | | Modoc Rd | | | | | |
|---|---|---|---|---|---|---|---|---|---|---|---|---|
| Approach: | North Bound | | | South Bound | | | East Bound | | | West Bound | | |
| Movement: | L - | T - | R | L - | T - | R | L - | T - | R | L - | T - | R |
| Control: | Stop Sign | | | Stop Sign | | | Stop Sign | | | Stop Sign | | |
| Rights: | Include | | | Include | | | Include | | | Include | | |
| Min. Green: | 0 | 0 | 0 | 0 | 0 | 0 | 0 | 0 | 0 | 0 | 0 | 0 |
| Lanes: | 0 0 | 1! 0 | 0 | 0 0 | 0 0 | 0 | 0 0 | 0 1 | 0 | 0 1 | 0 0 | 0 |
| Volume Module: | | | | | | | | | | | | |
| Base Vol: | 37 | 0 | 136 | 0 | 0 | 0 | 0 | 116 | 94 | 175 | 131 | 0 |
| Growth Adj: | 1.02 | 1.02 | 1.02 | 1.02 | 1.02 | 1.02 | 1.02 | 1.02 | 1.02 | 1.02 | 1.02 | 1.02 |
| Initial Bse: | 38 | 0 | 139 | 0 | 0 | 0 | 0 | 118 | 96 | 179 | 134 | 0 |
| Added Vol: | 0 | 0 | 2 | 0 | 0 | 0 | 0 | 0 | 0 | 2 | 0 | 0 |
| PasserByVol: | 0 | 0 | 0 | 0 | 0 | 0 | 0 | 0 | 0 | 0 | 0 | 0 |
| Initial Fut: | 38 | 0 | 141 | 0 | 0 | 0 | 0 | 118 | 96 | 181 | 134 | 0 |
| User Adj: | 1.00 | 1.00 | 1.00 | 1.00 | 1.00 | 1.00 | 1.00 | 1.00 | 1.00 | 1.00 | 1.00 | 1.00 |
| PHF Adj: | 1.00 | 1.00 | 1.00 | 1.00 | 1.00 | 1.00 | 1.00 | 1.00 | 1.00 | 1.00 | 1.00 | 1.00 |
| PHF Volume: | 38 | 0 | 141 | 0 | 0 | 0 | 0 | 118 | 96 | 181 | 134 | 0 |
| Reduct Vol: | 0 | 0 | 0 | 0 | 0 | 0 | 0 | 0 | 0 | 0 | 0 | 0 |
| Reduced Vol: | 38 | 0 | 141 | 0 | 0 | 0 | 0 | 118 | 96 | 181 | 134 | 0 |
| PCE Adj: | 1.00 | 1.00 | 1.00 | 1.00 | 1.00 | 1.00 | 1.00 | 1.00 | 1.00 | 1.00 | 1.00 | 1.00 |
| MLF Adj: | 1.00 | 1.00 | 1.00 | 1.00 | 1.00 | 1.00 | 1.00 | 1.00 | 1.00 | 1.00 | 1.00 | 1.00 |
| FinalVolume: | 38 | 0 | 141 | 0 | 0 | 0 | 0 | 118 | 96 | 181 | 134 | 0 |
| Saturation Flow Module: | | | | | | | | | | | | |
| Adjustment: | 1.00 | 1.00 | 1.00 | 1.00 | 1.00 | 1.00 | 1.00 | 1.00 | 1.00 | 1.00 | 1.00 | 1.00 |
| Lanes: | 0.21 | 0.00 | 0.79 | 0.00 | 0.00 | 0.00 | 0.00 | 0.55 | 0.45 | 0.57 | 0.43 | 0.00 |
| Final Sat.: | 153 | 0 | 572 | 0 | 0 | 0 | 0 | 435 | 352 | 432 | 320 | 0 |
| Capacity Analysis Module: | | | | | | | | | | | | |
| Vol/Sat: | 0.25 | xxxx | 0.25 | xxxx | xxxx | xxxx | xxxx | 0.27 | 0.27 | 0.42 | 0.42 | xxxx |
| Crit Moves: | **** | | | | | | | **** | | | **** | |
| Delay/Veh: | 8.9 | 0.0 | 8.9 | 0.0 | 0.0 | 0.0 | 0.0 | 9.0 | 9.0 | 10.8 | 10.8 | 0.0 |
| Delay Adj: | 1.00 | 1.00 | 1.00 | 1.00 | 1.00 | 1.00 | 1.00 | 1.00 | 1.00 | 1.00 | 1.00 | 1.00 |
| AdjDel/Veh: | 8.9 | 0.0 | 8.9 | 0.0 | 0.0 | 0.0 | 0.0 | 9.0 | 9.0 | 10.8 | 10.8 | 0.0 |
| LOS by Move: | A | * | A | * | * | * | * | A | A | B | B | * |
| ApproachDel: | 8.9 | | | xxxxxx | | | | 9.0 | | | 10.8 | |
| Delay Adj: | 1.00 | | | xxxxx | | | | 1.00 | | | 1.00 | |
| ApprAdjDel: | 8.9 | | | xxxxxx | | | | 9.0 | | | 10.8 | |
| LOS by Appr: | A | | | * | | | | A | | | B | |
| AllWayAvgQ: | 0.3 | 0.3 | 0.3 | 0.0 | 0.0 | 0.0 | 0.3 | 0.3 | 0.3 | 0.7 | 0.7 | 0.7 |

Note: Queue reported is the number of cars per lane.

Traffix 7.9.0215 (c) 2008 Dowling Assoc. Licensed to MMA, LONG BEACH, CA

Valle Verde Home Project
Existing+Ambient+Project (Proposed Project)
AM Peak Hour

Level Of Service Computation Report
2000 HCM 4-Way Stop Method (Future Volume Alternative)

Intersection #8 Via Senda at Las Palmas Dr

Cycle (sec): 100 | Critical Vol./Cap.(X): 0.555
Loss Time (sec): 0 (Y+R=4.0 sec) | Average Delay (sec/veh): 13.2
Optimal Cycle: 0 | Level Of Service: B

| Street Name: | Via Senda | | | | | | Las Palmas Dr | | | | | |
|---|---|---|---|---|---|---|---|---|---|---|---|---|
| Approach: | North Bound | | | South Bound | | | East Bound | | | West Bound | | |
| Movement: | L - | T - | R | L - | T - | R | L - | T - | R | L - | T - | R |
| Control: | Stop Sign | | | Stop Sign | | | Stop Sign | | | Stop Sign | | |
| Rights: | Include | | | Include | | | Include | | | Include | | |
| Min. Green: | 0 | 0 | 0 | 0 | 0 | 0 | 0 | 0 | 0 | 0 | 0 | 0 |
| Lanes: | 0 0 | 0 0 | 0 | 0 0 | 1! 0 | 0 | 0 1 | 0 0 | 0 | 0 0 | 1 0 | 1 |
| Volume Module: | | | | | | | | | | | | |
| Base Vol: | 0 | 0 | 0 | 237 | 0 | 34 | 26 | 283 | 0 | 0 | 337 | 146 |
| Growth Adj: | 1.02 | 1.02 | 1.02 | 1.02 | 1.02 | 1.02 | 1.02 | 1.02 | 1.02 | 1.02 | 1.02 | 1.02 |
| Initial Bse: | 0 | 0 | 0 | 242 | 0 | 35 | 27 | 289 | 0 | 0 | 344 | 149 |
| Added Vol: | 0 | 0 | 0 | 2 | 0 | 0 | 0 | 0 | 0 | 0 | 0 | 2 |
| PasserByVol: | 0 | 0 | 0 | 0 | 0 | 0 | 0 | 0 | 0 | 0 | 0 | 0 |
| Initial Fut: | 0 | 0 | 0 | 244 | 0 | 35 | 27 | 289 | 0 | 0 | 344 | 151 |
| User Adj: | 1.00 | 1.00 | 1.00 | 1.00 | 1.00 | 1.00 | 1.00 | 1.00 | 1.00 | 1.00 | 1.00 | 1.00 |
| PHF Adj: | 1.00 | 1.00 | 1.00 | 1.00 | 1.00 | 1.00 | 1.00 | 1.00 | 1.00 | 1.00 | 1.00 | 1.00 |
| PHF Volume: | 0 | 0 | 0 | 244 | 0 | 35 | 27 | 289 | 0 | 0 | 344 | 151 |
| Reduct Vol: | 0 | 0 | 0 | 0 | 0 | 0 | 0 | 0 | 0 | 0 | 0 | 0 |
| Reduced Vol: | 0 | 0 | 0 | 244 | 0 | 35 | 27 | 289 | 0 | 0 | 344 | 151 |
| PCE Adj: | 1.00 | 1.00 | 1.00 | 1.00 | 1.00 | 1.00 | 1.00 | 1.00 | 1.00 | 1.00 | 1.00 | 1.00 |
| MLF Adj: | 1.00 | 1.00 | 1.00 | 1.00 | 1.00 | 1.00 | 1.00 | 1.00 | 1.00 | 1.00 | 1.00 | 1.00 |
| FinalVolume: | 0 | 0 | 0 | 244 | 0 | 35 | 27 | 289 | 0 | 0 | 344 | 151 |
| Saturation Flow Module: | | | | | | | | | | | | |
| Adjustment: | 1.00 | 1.00 | 1.00 | 1.00 | 1.00 | 1.00 | 1.00 | 1.00 | 1.00 | 1.00 | 1.00 | 1.00 |
| Lanes: | 0.00 | 0.00 | 0.00 | 0.88 | 0.00 | 0.12 | 0.08 | 0.92 | 0.00 | 0.00 | 1.00 | 1.00 |
| Final Sat.: | 0 | 0 | 0 | 518 | 0 | 74 | 54 | 589 | 0 | 0 | 619 | 704 |
| Capacity Analysis Module: | | | | | | | | | | | | |
| Vol/Sat: | xxxx | xxxx | xxxx | 0.47 | xxxx | 0.47 | 0.49 | 0.49 | xxxx | xxxx | 0.55 | 0.21 |
| Crit Moves: | | | | | | **** | | **** | | | **** | |
| Delay/Veh: | 0.0 | 0.0 | 0.0 | 13.4 | 0.0 | 13.4 | 13.3 | 13.3 | 0.0 | 0.0 | 14.9 | 9.0 |
| Delay Adj: | 1.00 | 1.00 | 1.00 | 1.00 | 1.00 | 1.00 | 1.00 | 1.00 | 1.00 | 1.00 | 1.00 | 1.00 |
| AdjDel/Veh: | 0.0 | 0.0 | 0.0 | 13.4 | 0.0 | 13.4 | 13.3 | 13.3 | 0.0 | 0.0 | 14.9 | 9.0 |
| LOS by Move: | * | * | * | B | * | B | B | B | * | * | B | A |
| ApproachDel: | xxxxxx | | | 13.4 | | | 13.3 | | | 13.1 | | |
| Delay Adj: | xxxxx | | | 1.00 | | | 1.00 | | | 1.00 | | |
| ApprAdjDel: | xxxxxx | | | 13.4 | | | 13.3 | | | 13.1 | | |
| LOS by Appr: | * | | | B | | | B | | | B | | |
| AllWayAvgQ: | 0.0 | 0.0 | 0.0 | 0.8 | 0.8 | 0.8 | 0.9 | 0.9 | 0.9 | 0.0 | 1.1 | 0.3 |

Note: Queue reported is the number of cars per lane.

Traffix 7.9.0215 (c) 2008 Dowling Assoc. Licensed to MMA, LONG BEACH, CA

Valle Verde Home Project
Existing+Ambient+Project (Proposed Project)
AM Peak Hour

Level Of Service Computation Report
ICU 1(Loss as Cycle Length %) Method (Future Volume Alternative)

Intersection #9 Las Palmas/S La Cumbre Rd at US-101 SB Ramps

| | | | |
|---|---|---|---|
| Cycle (sec): | 100 | Critical Vol./Cap.(X): | 0.616 |
| Loss Time (sec): | 10 (Y+R=4.0 sec) | Average Delay (sec/veh): | xxxxxx |
| Optimal Cycle: | 41 | Level Of Service: | B |

| Approach: | North Bound | | | South Bound | | | East Bound | | | West Bound | | |
|---|---|---|---|---|---|---|---|---|---|---|---|---|
| Movement: | L - | T - | R | L - | T - | R | L - | T - | R | L - | T - | R |
| Control: | Protected | | | Protected | | | Protected | | | Protected | | |
| Rights: | Include | | | Include | | | Include | | | Include | | |
| Min. Green: | 0 | 0 | 0 | 0 | 0 | 0 | 0 | 0 | 0 | 0 | 0 | 0 |
| Lanes: | 0 0 | 2 0 | 1 | 2 0 | 1 0 | 0 | 1 1 | 0 0 | 1 | 0 0 | 0 0 | 0 |
| Volume Module: | | | | | | | | | | | | |
| Base Vol: | 0 | 422 | 239 | 449 | 385 | 0 | 458 | 5 | 110 | 0 | 0 | 0 |
| Growth Adj: | 1.02 | 1.02 | 1.02 | 1.02 | 1.02 | 1.02 | 1.02 | 1.02 | 1.02 | 1.02 | 1.02 | 1.02 |
| Initial Bse: | 0 | 430 | 244 | 458 | 393 | 0 | 467 | 5 | 112 | 0 | 0 | 0 |
| Added Vol: | 0 | 2 | 0 | 0 | 0 | 0 | 0 | 0 | 2 | 0 | 0 | 0 |
| PasserByVol: | 0 | 0 | 0 | 0 | 0 | 0 | 0 | 0 | 0 | 0 | 0 | 0 |
| Initial Fut: | 0 | 432 | 244 | 458 | 393 | 0 | 467 | 5 | 114 | 0 | 0 | 0 |
| User Adj: | 1.00 | 1.00 | 1.00 | 1.00 | 1.00 | 1.00 | 1.00 | 1.00 | 1.00 | 1.00 | 1.00 | 1.00 |
| PHF Adj: | 1.00 | 1.00 | 1.00 | 1.00 | 1.00 | 1.00 | 1.00 | 1.00 | 1.00 | 1.00 | 1.00 | 1.00 |
| PHF Volume: | 0 | 432 | 244 | 458 | 393 | 0 | 467 | 5 | 114 | 0 | 0 | 0 |
| Reduct Vol: | 0 | 0 | 0 | 0 | 0 | 0 | 0 | 0 | 0 | 0 | 0 | 0 |
| Reduced Vol: | 0 | 432 | 244 | 458 | 393 | 0 | 467 | 5 | 114 | 0 | 0 | 0 |
| PCE Adj: | 1.00 | 1.00 | 1.00 | 1.00 | 1.00 | 1.00 | 1.00 | 1.00 | 1.00 | 1.00 | 1.00 | 1.00 |
| MLF Adj: | 1.00 | 1.00 | 1.00 | 1.00 | 1.00 | 1.00 | 1.00 | 1.00 | 1.00 | 1.00 | 1.00 | 1.00 |
| FinalVolume: | 0 | 432 | 244 | 458 | 393 | 0 | 467 | 5 | 114 | 0 | 0 | 0 |
| Saturation Flow Module: | | | | | | | | | | | | |
| Sat/Lane: | 1600 | 1600 | 1600 | 1600 | 1600 | 1600 | 1600 | 1600 | 1600 | 1600 | 1600 | 1600 |
| Adjustment: | 1.00 | 1.00 | 1.00 | 0.80 | 1.00 | 1.00 | 0.80 | 1.00 | 1.00 | 1.00 | 1.00 | 1.00 |
| Lanes: | 0.00 | 2.00 | 1.00 | 2.00 | 1.00 | 0.00 | 1.98 | 0.02 | 1.00 | 0.00 | 0.00 | 0.00 |
| Final Sat.: | 0 | 3200 | 1600 | 2560 | 1600 | 0 | 2532 | 35 | 1600 | 0 | 0 | 0 |
| Capacity Analysis Module: | | | | | | | | | | | | |
| Vol/Sat: | 0.00 | 0.14 | 0.15 | 0.18 | 0.25 | 0.00 | 0.18 | 0.15 | 0.07 | 0.00 | 0.00 | 0.00 |
| Crit Moves: | | | **** | **** | | | **** | | | | | |

Valle Verde Home Project
Existing+Ambient+Project (Proposed Project)
AM Peak Hour

Scenario Report

| | |
|---|---|
| Scenario: | E+A+P Alt1 AM |
| Command: | E+A+P Alt1 AM |
| Volume: | E+A AM |
| Geometry: | Existing |
| Impact Fee: | Default Impact Fee |
| Trip Generation: | AM Peak |
| Trip Distribution: | Trip Distribution |
| Paths: | Default Path |
| Routes: | Default Route |
| Configuration: | E+A+P Alt1 AM |

Valle Verde Home Project
Existing+Ambient+Project (Proposed Project)
AM Peak Hour

Trip Generation Report

Forecast for AM Peak

| Zone # | Subzone | Amount | Units | Rate In | Rate Out | Trips In | Trips Out | Total Trips | % Of Total |
|---|---|---|---|---|---|---|---|---|---|
| 101 | Project (Val | 1.00 | Residential | 4.00 | 4.00 | 4 | 4 | 8 | 100.0 |
| | Zone 101 Subtotal ..... | | | | | 4 | 4 | 8 | 100.0 |
| TOTAL ..... | | | | | | 4 | 4 | 8 | 100.0 |

Trip Distribution Report

Percent Of Trips Distribution

To Gates

| Zone | 1 | 2 | 3 | 4 | 5 | 7 | 8 | 10 |
|---|---|---|---|---|---|---|---|---|
| 101 | 5.0 | 5.0 | 40.0 | 30.0 | 5.0 | 0.0 | 10.0 | 5.0 |

Valle Verde Home Project
Existing+Ambient+Project (Proposed Project)
AM Peak Hour

Turning Movement Report
AM Peak

| Volume | Northbound | | | Southbound | | | Eastbound | | | Westbound | | | Total |
|---|---|---|---|---|---|---|---|---|---|---|---|---|---|
| Type | Left | Thru | Right | Left | Thru | Right | Left | Thru | Right | Left | Thru | Right | Volume |
| #6 Calle de los Amigos at Modoc Rd | | | | | | | | | | | | | |
| Base | 98 | 0 | 46 | 0 | 0 | 0 | 0 | 198 | 53 | 19 | 312 | 0 | 726 |
| Added | 2 | 0 | 1 | 0 | 0 | 0 | 0 | 0 | 2 | 1 | 0 | 0 | 6 |
| Total | 100 | 0 | 47 | 0 | 0 | 0 | 0 | 198 | 55 | 20 | 312 | 0 | 732 |
| #7 Via Senda at Modoc Rd | | | | | | | | | | | | | |
| Base | 38 | 0 | 139 | 0 | 0 | 0 | 0 | 118 | 96 | 179 | 134 | 0 | 703 |
| Added | 0 | 0 | 2 | 0 | 0 | 0 | 0 | 0 | 0 | 2 | 0 | 0 | 4 |
| Total | 38 | 0 | 141 | 0 | 0 | 0 | 0 | 118 | 96 | 181 | 134 | 0 | 707 |
| #8 Via Senda at Las Palmas Dr | | | | | | | | | | | | | |
| Base | 0 | 0 | 0 | 242 | 0 | 35 | 27 | 289 | 0 | 0 | 344 | 149 | 1084 |
| Added | 0 | 0 | 0 | 2 | 0 | 0 | 0 | 0 | 0 | 0 | 0 | 2 | 4 |
| Total | 0 | 0 | 0 | 244 | 0 | 35 | 27 | 289 | 0 | 0 | 344 | 151 | 1088 |
| #9 Las Palmas/S La Cumbre Rd at US-101 SB Ramps | | | | | | | | | | | | | |
| Base | 0 | 430 | 244 | 458 | 393 | 0 | 467 | 5 | 112 | 0 | 0 | 0 | 2109 |
| Added | 0 | 2 | 0 | 0 | 0 | 0 | 0 | 0 | 2 | 0 | 0 | 0 | 4 |
| Total | 0 | 432 | 244 | 458 | 393 | 0 | 467 | 5 | 114 | 0 | 0 | 0 | 2113 |

Valle Verde Home Project
Existing+Ambient+Project (Proposed Project)
AM Peak Hour

Impact Analysis Report
Level Of Service

| Intersection | Base LOS | Base Del/ Veh | Base V/ C | Future LOS | Future Del/ Veh | Future V/ C | Change in |
|---|---|---|---|---|---|---|---|
| # 6 Calle de los Amigos at Modoc R | B | 12.9 | 0.000 | B | 13.0 | 0.000 | + 0.074 D/V |
| # 7 Via Senda at Modoc Rd | A | 9.7 | 0.415 | A | 9.8 | 0.418 | + 0.003 V/C |
| # 8 Via Senda at Las Palmas Dr | B | 13.2 | 0.554 | B | 13.2 | 0.555 | + 0.001 V/C |
| # 9 Las Palmas/S La Cumbre Rd at | C | 26.2 | 0.545 | C | 26.2 | 0.545 | + 0.009 D/V |

Traffix 7.9.0215 (c) 2008 Dowling Assoc. Licensed to MMA, LONG BEACH, CA

Valle Verde Home Project
Existing+Ambient+Project (Proposed Project)
AM Peak Hour

Level Of Service Computation Report
2000 HCM Unsignalized Method (Future Volume Alternative)

Intersection #6 Calle de los Amigos at Modoc Rd

Average Delay (sec/veh): 2.8  Worst Case Level Of Service: B[ 13.0]

| Street Name: | Calle de los Amigos | | | | | | | | | Modoc Rd | | |
|---|---|---|---|---|---|---|---|---|---|---|---|---|
| Approach: | North Bound | | | South Bound | | | East Bound | | | West Bound | | |
| Movement: | L - T - R | | | L - T - R | | | L - T - R | | | L - T - R | | |
| Control: | Stop Sign | | | Stop Sign | | | Uncontrolled | | | Uncontrolled | | |
| Rights: | Include | | | Include | | | Include | | | Include | | |
| Lanes: | 1 0 0 0 1 | | | 0 0 0 0 0 | | | 0 0 0 1 0 | | | 1 0 1 0 0 | | |
| Volume Module: | | | | | | | | | | | | |
| Base Vol: | 96 | 0 | 45 | 0 | 0 | 0 | 0 | 194 | 52 | 19 | 306 | 0 |
| Growth Adj: | 1.02 | 1.02 | 1.02 | 1.02 | 1.02 | 1.02 | 1.02 | 1.02 | 1.02 | 1.02 | 1.02 | 1.02 |
| Initial Bse: | 98 | 0 | 46 | 0 | 0 | 0 | 0 | 198 | 53 | 19 | 312 | 0 |
| Added Vol: | 2 | 0 | 1 | 0 | 0 | 0 | 0 | 0 | 2 | 1 | 0 | 0 |
| PasserByVol: | 0 | 0 | 0 | 0 | 0 | 0 | 0 | 0 | 0 | 0 | 0 | 0 |
| Initial Fut: | 100 | 0 | 47 | 0 | 0 | 0 | 0 | 198 | 55 | 20 | 312 | 0 |
| User Adj: | 1.00 | 1.00 | 1.00 | 1.00 | 1.00 | 1.00 | 1.00 | 1.00 | 1.00 | 1.00 | 1.00 | 1.00 |
| PHF Adj: | 1.00 | 1.00 | 1.00 | 1.00 | 1.00 | 1.00 | 1.00 | 1.00 | 1.00 | 1.00 | 1.00 | 1.00 |
| PHF Volume: | 100 | 0 | 47 | 0 | 0 | 0 | 0 | 198 | 55 | 20 | 312 | 0 |
| Reduct Vol: | 0 | 0 | 0 | 0 | 0 | 0 | 0 | 0 | 0 | 0 | 0 | 0 |
| FinalVolume: | 100 | 0 | 47 | 0 | 0 | 0 | 0 | 198 | 55 | 20 | 312 | 0 |
| Critical Gap Module: | | | | | | | | | | | | |
| Critical Gp: | 6.4 | xxxx | 6.2 | xxxxx | xxxx | xxxxx | xxxxx | xxxx | xxxxx | 4.1 | xxxx | xxxxx |
| FollowUpTim: | 3.5 | xxxx | 3.3 | xxxxx | xxxx | xxxxx | xxxxx | xxxx | xxxxx | 2.2 | xxxx | xxxxx |
| Capacity Module: | | | | | | | | | | | | |
| Cnflict Vol: | 578 | xxxx | 225 | xxxx | xxxx | xxxxx | xxxx | xxxx | xxxxx | 253 | xxxx | xxxxx |
| Potent Cap.: | 481 | xxxx | 819 | xxxx | xxxx | xxxxx | xxxx | xxxx | xxxxx | 1324 | xxxx | xxxxx |
| Move Cap.: | 475 | xxxx | 819 | xxxx | xxxx | xxxxx | xxxx | xxxx | xxxxx | 1324 | xxxx | xxxxx |
| Volume/Cap: | 0.21 | xxxx | 0.06 | xxxx | xxxx | xxxx | xxxx | xxxx | xxxx | 0.02 | xxxx | xxxx |
| Level Of Service Module: | | | | | | | | | | | | |
| 2Way95thQ: | 0.8 | xxxx | 0.2 | xxxx | xxxx | xxxxx | xxxx | xxxx | xxxxx | 0.0 | xxxx | xxxxx |
| Control Del: | 14.6 | xxxx | 9.7 | xxxxx | xxxx | xxxxx | xxxxx | xxxx | xxxxx | 7.8 | xxxx | xxxxx |
| LOS by Move: | B | * | A | * | * | * | * | * | * | A | * | * |
| Movement: | LT - LTR - RT | | | LT - LTR - RT | | | LT - LTR - RT | | | LT - LTR - RT | | |
| Shared Cap.: | xxxx | xxxx | xxxxx | xxxx | xxxx | xxxxx | xxxx | xxxx | xxxxx | xxxx | xxxx | xxxxx |
| SharedQueue: | xxxxx | xxxx | xxxxx | xxxxx | xxxx | xxxxx | xxxxx | xxxx | xxxxx | xxxxx | xxxx | xxxxx |
| Shrd ConDel: | xxxxx | xxxx | xxxxx | xxxxx | xxxx | xxxxx | xxxxx | xxxx | xxxxx | xxxxx | xxxx | xxxxx |
| Shared LOS: | * | * | * | * | * | * | * | * | * | * | * | * |
| ApproachDel: | 13.0 | | | xxxxxx | | | xxxxxx | | | xxxxxx | | |
| ApproachLOS: | B | | | * | | | * | | | * | | |

Note: Queue reported is the number of cars per lane.

Valle Verde Home Project
Existing+Ambient+Project (Proposed Project)
AM Peak Hour

Level Of Service Computation Report
2000 HCM 4-Way Stop Method (Future Volume Alternative)

Intersection #7 Via Senda at Modoc Rd

Cycle (sec): 100 | Critical Vol./Cap.(X): 0.418
Loss Time (sec): 0 (Y+R=4.0 sec) | Average Delay (sec/veh): 9.8
Optimal Cycle: 0 | Level Of Service: A

| Street Name: | Via Senda | | | | | | Modoc Rd | | | | | |
|---|---|---|---|---|---|---|---|---|---|---|---|---|
| Approach: | North Bound | | | South Bound | | | East Bound | | | West Bound | | |
| Movement: | L - | T - | R | L - | T - | R | L - | T - | R | L - | T - | R |
| Control: | Stop Sign | | | Stop Sign | | | Stop Sign | | | Stop Sign | | |
| Rights: | Include | | | Include | | | Include | | | Include | | |
| Min. Green: | 0 | 0 | 0 | 0 | 0 | 0 | 0 | 0 | 0 | 0 | 0 | 0 |
| Lanes: | 0 0 | 1! 0 | 0 | 0 0 | 0 0 | 0 | 0 0 | 0 1 | 0 | 0 1 | 0 0 | 0 |
| Volume Module: | | | | | | | | | | | | |
| Base Vol: | 37 | 0 | 136 | 0 | 0 | 0 | 0 | 116 | 94 | 175 | 131 | 0 |
| Growth Adj: | 1.02 | 1.02 | 1.02 | 1.02 | 1.02 | 1.02 | 1.02 | 1.02 | 1.02 | 1.02 | 1.02 | 1.02 |
| Initial Bse: | 38 | 0 | 139 | 0 | 0 | 0 | 0 | 118 | 96 | 179 | 134 | 0 |
| Added Vol: | 0 | 0 | 2 | 0 | 0 | 0 | 0 | 0 | 0 | 2 | 0 | 0 |
| PasserByVol: | 0 | 0 | 0 | 0 | 0 | 0 | 0 | 0 | 0 | 0 | 0 | 0 |
| Initial Fut: | 38 | 0 | 141 | 0 | 0 | 0 | 0 | 118 | 96 | 181 | 134 | 0 |
| User Adj: | 1.00 | 1.00 | 1.00 | 1.00 | 1.00 | 1.00 | 1.00 | 1.00 | 1.00 | 1.00 | 1.00 | 1.00 |
| PHF Adj: | 1.00 | 1.00 | 1.00 | 1.00 | 1.00 | 1.00 | 1.00 | 1.00 | 1.00 | 1.00 | 1.00 | 1.00 |
| PHF Volume: | 38 | 0 | 141 | 0 | 0 | 0 | 0 | 118 | 96 | 181 | 134 | 0 |
| Reduct Vol: | 0 | 0 | 0 | 0 | 0 | 0 | 0 | 0 | 0 | 0 | 0 | 0 |
| Reduced Vol: | 38 | 0 | 141 | 0 | 0 | 0 | 0 | 118 | 96 | 181 | 134 | 0 |
| PCE Adj: | 1.00 | 1.00 | 1.00 | 1.00 | 1.00 | 1.00 | 1.00 | 1.00 | 1.00 | 1.00 | 1.00 | 1.00 |
| MLF Adj: | 1.00 | 1.00 | 1.00 | 1.00 | 1.00 | 1.00 | 1.00 | 1.00 | 1.00 | 1.00 | 1.00 | 1.00 |
| FinalVolume: | 38 | 0 | 141 | 0 | 0 | 0 | 0 | 118 | 96 | 181 | 134 | 0 |
| Saturation Flow Module: | | | | | | | | | | | | |
| Adjustment: | 1.00 | 1.00 | 1.00 | 1.00 | 1.00 | 1.00 | 1.00 | 1.00 | 1.00 | 1.00 | 1.00 | 1.00 |
| Lanes: | 0.21 | 0.00 | 0.79 | 0.00 | 0.00 | 0.00 | 0.00 | 0.55 | 0.45 | 0.57 | 0.43 | 0.00 |
| Final Sat.: | 153 | 0 | 572 | 0 | 0 | 0 | 0 | 435 | 352 | 432 | 320 | 0 |
| Capacity Analysis Module: | | | | | | | | | | | | |
| Vol/Sat: | 0.25 | xxxx | 0.25 | xxxx | xxxx | xxxx | xxxx | 0.27 | 0.27 | 0.42 | 0.42 | xxxx |
| Crit Moves: | **** | | | | | | | **** | | | **** | |
| Delay/Veh: | 8.9 | 0.0 | 8.9 | 0.0 | 0.0 | 0.0 | 0.0 | 9.0 | 9.0 | 10.8 | 10.8 | 0.0 |
| Delay Adj: | 1.00 | 1.00 | 1.00 | 1.00 | 1.00 | 1.00 | 1.00 | 1.00 | 1.00 | 1.00 | 1.00 | 1.00 |
| AdjDel/Veh: | 8.9 | 0.0 | 8.9 | 0.0 | 0.0 | 0.0 | 0.0 | 9.0 | 9.0 | 10.8 | 10.8 | 0.0 |
| LOS by Move: | A | * | A | * | * | * | * | A | A | B | B | * |
| ApproachDel: | 8.9 | | | xxxxxx | | | | 9.0 | | | 10.8 | |
| Delay Adj: | 1.00 | | | xxxxx | | | | 1.00 | | | 1.00 | |
| ApprAdjDel: | 8.9 | | | xxxxxx | | | | 9.0 | | | 10.8 | |
| LOS by Appr: | A | | | * | | | | A | | | B | |
| AllWayAvgQ: | 0.3 | 0.3 | 0.3 | 0.0 | 0.0 | 0.0 | 0.3 | 0.3 | 0.3 | 0.7 | 0.7 | 0.7 |

Note: Queue reported is the number of cars per lane.

Traffix 7.9.0215 (c) 2008 Dowling Assoc. Licensed to MMA, LONG BEACH, CA

Valle Verde Home Project
Existing+Ambient+Project (Proposed Project)
AM Peak Hour

Level Of Service Computation Report
2000 HCM 4-Way Stop Method (Future Volume Alternative)

Intersection #8 Via Senda at Las Palmas Dr

Cycle (sec): 100 | Critical Vol./Cap.(X): 0.555
Loss Time (sec): 0 (Y+R=4.0 sec) | Average Delay (sec/veh): 13.2
Optimal Cycle: 0 | Level Of Service: B

| Street Name: | Via Senda | | | | | | Las Palmas Dr | | | | | |
|---|---|---|---|---|---|---|---|---|---|---|---|---|
| Approach: | North Bound | | | South Bound | | | East Bound | | | West Bound | | |
| Movement: | L - | T - | R | L - | T - | R | L - | T - | R | L - | T - | R |
| Control: | Stop Sign | | | Stop Sign | | | Stop Sign | | | Stop Sign | | |
| Rights: | Include | | | Include | | | Include | | | Include | | |
| Min. Green: | 0 | 0 | 0 | 0 | 0 | 0 | 0 | 0 | 0 | 0 | 0 | 0 |
| Lanes: | 0 0 | 0 0 | 0 | 0 0 | 1! 0 | 0 | 0 1 | 0 0 | 0 | 0 0 | 1 0 | 1 |
| Volume Module: | | | | | | | | | | | | |
| Base Vol: | 0 | 0 | 0 | 237 | 0 | 34 | 26 | 283 | 0 | 0 | 337 | 146 |
| Growth Adj: | 1.02 | 1.02 | 1.02 | 1.02 | 1.02 | 1.02 | 1.02 | 1.02 | 1.02 | 1.02 | 1.02 | 1.02 |
| Initial Bse: | 0 | 0 | 0 | 242 | 0 | 35 | 27 | 289 | 0 | 0 | 344 | 149 |
| Added Vol: | 0 | 0 | 0 | 2 | 0 | 0 | 0 | 0 | 0 | 0 | 0 | 2 |
| PasserByVol: | 0 | 0 | 0 | 0 | 0 | 0 | 0 | 0 | 0 | 0 | 0 | 0 |
| Initial Fut: | 0 | 0 | 0 | 244 | 0 | 35 | 27 | 289 | 0 | 0 | 344 | 151 |
| User Adj: | 1.00 | 1.00 | 1.00 | 1.00 | 1.00 | 1.00 | 1.00 | 1.00 | 1.00 | 1.00 | 1.00 | 1.00 |
| PHF Adj: | 1.00 | 1.00 | 1.00 | 1.00 | 1.00 | 1.00 | 1.00 | 1.00 | 1.00 | 1.00 | 1.00 | 1.00 |
| PHF Volume: | 0 | 0 | 0 | 244 | 0 | 35 | 27 | 289 | 0 | 0 | 344 | 151 |
| Reduct Vol: | 0 | 0 | 0 | 0 | 0 | 0 | 0 | 0 | 0 | 0 | 0 | 0 |
| Reduced Vol: | 0 | 0 | 0 | 244 | 0 | 35 | 27 | 289 | 0 | 0 | 344 | 151 |
| PCE Adj: | 1.00 | 1.00 | 1.00 | 1.00 | 1.00 | 1.00 | 1.00 | 1.00 | 1.00 | 1.00 | 1.00 | 1.00 |
| MLF Adj: | 1.00 | 1.00 | 1.00 | 1.00 | 1.00 | 1.00 | 1.00 | 1.00 | 1.00 | 1.00 | 1.00 | 1.00 |
| FinalVolume: | 0 | 0 | 0 | 244 | 0 | 35 | 27 | 289 | 0 | 0 | 344 | 151 |
| Saturation Flow Module: | | | | | | | | | | | | |
| Adjustment: | 1.00 | 1.00 | 1.00 | 1.00 | 1.00 | 1.00 | 1.00 | 1.00 | 1.00 | 1.00 | 1.00 | 1.00 |
| Lanes: | 0.00 | 0.00 | 0.00 | 0.88 | 0.00 | 0.12 | 0.08 | 0.92 | 0.00 | 0.00 | 1.00 | 1.00 |
| Final Sat.: | 0 | 0 | 0 | 518 | 0 | 74 | 54 | 589 | 0 | 0 | 619 | 704 |
| Capacity Analysis Module: | | | | | | | | | | | | |
| Vol/Sat: | xxxx | xxxx | xxxx | 0.47 | xxxx | 0.47 | 0.49 | 0.49 | xxxx | xxxx | 0.55 | 0.21 |
| Crit Moves: | | | | | | **** | | **** | | | **** | |
| Delay/Veh: | 0.0 | 0.0 | 0.0 | 13.4 | 0.0 | 13.4 | 13.3 | 13.3 | 0.0 | 0.0 | 14.9 | 9.0 |
| Delay Adj: | 1.00 | 1.00 | 1.00 | 1.00 | 1.00 | 1.00 | 1.00 | 1.00 | 1.00 | 1.00 | 1.00 | 1.00 |
| AdjDel/Veh: | 0.0 | 0.0 | 0.0 | 13.4 | 0.0 | 13.4 | 13.3 | 13.3 | 0.0 | 0.0 | 14.9 | 9.0 |
| LOS by Move: | * | * | * | B | * | B | B | B | * | * | B | A |
| ApproachDel: | xxxxxx | | | 13.4 | | | 13.3 | | | 13.1 | | |
| Delay Adj: | xxxxx | | | 1.00 | | | 1.00 | | | 1.00 | | |
| ApprAdjDel: | xxxxxx | | | 13.4 | | | 13.3 | | | 13.1 | | |
| LOS by Appr: | * | | | B | | | B | | | B | | |
| AllWayAvgQ: | 0.0 | 0.0 | 0.0 | 0.8 | 0.8 | 0.8 | 0.9 | 0.9 | 0.9 | 0.0 | 1.1 | 0.3 |

Note: Queue reported is the number of cars per lane.

Traffix 7.9.0215 (c) 2008 Dowling Assoc. Licensed to MMA, LONG BEACH, CA

Valle Verde Home Project
Existing+Ambient+Project (Proposed Project)
AM Peak Hour

Level Of Service Computation Report
2000 HCM Operations Method (Future Volume Alternative)

Intersection #9 Las Palmas/S La Cumbre Rd at US-101 SB Ramps

| | | | |
|---|---|---|---|
| Cycle (sec): | 100 | Critical Vol./Cap.(X): | 0.545 |
| Loss Time (sec): | 10 (Y+R=4.0 sec) | Average Delay (sec/veh): | 26.2 |
| Optimal Cycle: | 39 | Level Of Service: | C |

| Approach: | North Bound | | | South Bound | | | East Bound | | | West Bound | | |
|---|---|---|---|---|---|---|---|---|---|---|---|---|
| Movement: | L - | T - | R | L - | T - | R | L - | T - | R | L - | T - | R |
| Control: | Protected | | | Protected | | | Protected | | | Protected | | |
| Rights: | Include | | | Include | | | Include | | | Include | | |
| Min. Green: | 0 | 0 | 0 | 0 | 0 | 0 | 0 | 0 | 0 | 0 | 0 | 0 |
| Lanes: | 0 0 | 2 0 | 1 | 2 0 | 1 0 | 0 | 1 1 | 0 0 | 1 | 0 0 | 0 0 | 0 |
| Volume Module: | | | | | | | | | | | | |
| Base Vol: | 0 | 422 | 239 | 449 | 385 | 0 | 458 | 5 | 110 | 0 | 0 | 0 |
| Growth Adj: | 1.02 | 1.02 | 1.02 | 1.02 | 1.02 | 1.02 | 1.02 | 1.02 | 1.02 | 1.02 | 1.02 | 1.02 |
| Initial Bse: | 0 | 430 | 244 | 458 | 393 | 0 | 467 | 5 | 112 | 0 | 0 | 0 |
| Added Vol: | 0 | 2 | 0 | 0 | 0 | 0 | 0 | 0 | 2 | 0 | 0 | 0 |
| PasserByVol: | 0 | 0 | 0 | 0 | 0 | 0 | 0 | 0 | 0 | 0 | 0 | 0 |
| Initial Fut: | 0 | 432 | 244 | 458 | 393 | 0 | 467 | 5 | 114 | 0 | 0 | 0 |
| User Adj: | 1.00 | 1.00 | 1.00 | 1.00 | 1.00 | 1.00 | 1.00 | 1.00 | 1.00 | 1.00 | 1.00 | 1.00 |
| PHF Adj: | 1.00 | 1.00 | 1.00 | 1.00 | 1.00 | 1.00 | 1.00 | 1.00 | 1.00 | 1.00 | 1.00 | 1.00 |
| PHF Volume: | 0 | 432 | 244 | 458 | 393 | 0 | 467 | 5 | 114 | 0 | 0 | 0 |
| Reduct Vol: | 0 | 0 | 0 | 0 | 0 | 0 | 0 | 0 | 0 | 0 | 0 | 0 |
| Reduced Vol: | 0 | 432 | 244 | 458 | 393 | 0 | 467 | 5 | 114 | 0 | 0 | 0 |
| PCE Adj: | 1.00 | 1.00 | 1.00 | 1.00 | 1.00 | 1.00 | 1.00 | 1.00 | 1.00 | 1.00 | 1.00 | 1.00 |
| MLF Adj: | 1.00 | 1.00 | 1.00 | 1.00 | 1.00 | 1.00 | 1.00 | 1.00 | 1.00 | 1.00 | 1.00 | 1.00 |
| FinalVolume: | 0 | 432 | 244 | 458 | 393 | 0 | 467 | 5 | 114 | 0 | 0 | 0 |
| Saturation Flow Module: | | | | | | | | | | | | |
| Sat/Lane: | 1900 | 1900 | 1900 | 1900 | 1900 | 1900 | 1900 | 1900 | 1900 | 1900 | 1900 | 1900 |
| Adjustment: | 1.00 | 0.95 | 0.85 | 0.74 | 1.00 | 1.00 | 0.70 | 0.88 | 0.85 | 1.00 | 1.00 | 1.00 |
| Lanes: | 0.00 | 2.00 | 1.00 | 2.00 | 1.00 | 0.00 | 1.98 | 0.02 | 1.00 | 0.00 | 0.00 | 0.00 |
| Final Sat.: | 0 | 3610 | 1615 | 2801 | 1900 | 0 | 2652 | 29 | 1615 | 0 | 0 | 0 |
| Capacity Analysis Module: | | | | | | | | | | | | |
| Vol/Sat: | 0.00 | 0.12 | 0.15 | 0.16 | 0.21 | 0.00 | 0.18 | 0.18 | 0.07 | 0.00 | 0.00 | 0.00 |
| Crit Moves: | | | **** | **** | | | **** | | | | | |
| Green/Cycle: | 0.00 | 0.28 | 0.28 | 0.30 | 0.58 | 0.00 | 0.32 | 0.32 | 0.32 | 0.00 | 0.00 | 0.00 |
| Volume/Cap: | 0.00 | 0.43 | 0.55 | 0.55 | 0.36 | 0.00 | 0.55 | 0.55 | 0.22 | 0.00 | 0.00 | 0.00 |
| Delay/Veh: | 0.0 | 30.0 | 32.2 | 30.0 | 11.5 | 0.0 | 28.5 | 28.5 | 24.9 | 0.0 | 0.0 | 0.0 |
| User DelAdj: | 1.00 | 1.00 | 1.00 | 1.00 | 1.00 | 1.00 | 1.00 | 1.00 | 1.00 | 1.00 | 1.00 | 1.00 |
| AdjDel/Veh: | 0.0 | 30.0 | 32.2 | 30.0 | 11.5 | 0.0 | 28.5 | 28.5 | 24.9 | 0.0 | 0.0 | 0.0 |
| LOS by Move: | A | C | C | C | B | A | C | C | C | A | A | A |
| HCM2kAvgQ: | 0 | 6 | 7 | 7 | 6 | 0 | 7 | 8 | 3 | 0 | 0 | 0 |

Note: Queue reported is the number of cars per lane.

# FUTURE WITH PROJECT
# LOS WORKSHEETS

# WEEKDAY PM PEAK HOUR

Valle Verde Home Project
Existing+Ambient+Project (Proposed Project)
PM Peak Hour

Scenario Report

| | |
|---|---|
| Scenario: | E+A+P Alt1 PM |
| Command: | E+A+P Alt1 PM |
| Volume: | E+A PM |
| Geometry: | Existing |
| Impact Fee: | Default Impact Fee |
| Trip Generation: | PM Peak |
| Trip Distribution: | Trip Distribution |
| Paths: | Default Path |
| Routes: | Default Route |
| Configuration: | E+A+P Alt1 PM |

Valle Verde Home Project
Existing+Ambient+Project (Proposed Project)
PM Peak Hour

Trip Generation Report

Forecast for PM Peak

| Zone # | Subzone | Amount | Units | Rate In | Rate Out | Trips In | Trips Out | Total Trips | % Of Total |
|---|---|---|---|---|---|---|---|---|---|
| 101 | Project (Val | 1.00 | Residential | 6.00 | 6.00 | 6 | 6 | 12 | 100.0 |
| | Zone 101 Subtotal ..... | | | | | 6 | 6 | 12 | 100.0 |
| TOTAL ..... | | | | | | 6 | 6 | 12 | 100.0 |

Trip Distribution Report

Percent Of Trips Distribution

To Gates

| Zone | 1 | 2 | 3 | 4 | 5 | 7 | 8 | 10 |
|---|---|---|---|---|---|---|---|---|
| 101 | 5.0 | 5.0 | 40.0 | 30.0 | 5.0 | 0.0 | 10.0 | 5.0 |

Valle Verde Home Project
Existing+Ambient+Project (Proposed Project)
PM Peak Hour

Turning Movement Report
PM Peak

| Volume | Northbound | | | Southbound | | | Eastbound | | | Westbound | | | Total |
|---|---|---|---|---|---|---|---|---|---|---|---|---|---|
| Type | Left | Thru | Right | Left | Thru | Right | Left | Thru | Right | Left | Thru | Right | Volume |
| #6 Calle de los Amigos at Modoc Rd | | | | | | | | | | | | | |
| Base | 71 | 0 | 36 | 0 | 0 | 0 | 0 | 335 | 111 | 49 | 281 | 0 | 882 |
| Added | 3 | 0 | 1 | 0 | 0 | 0 | 0 | 0 | 3 | 1 | 0 | 0 | 8 |
| Total | 74 | 0 | 37 | 0 | 0 | 0 | 0 | 335 | 114 | 50 | 281 | 0 | 890 |
| #7 Via Senda at Modoc Rd | | | | | | | | | | | | | |
| Base | 100 | 0 | 210 | 0 | 0 | 0 | 0 | 192 | 71 | 181 | 183 | 0 | 936 |
| Added | 0 | 0 | 3 | 0 | 0 | 0 | 0 | 0 | 0 | 3 | 0 | 0 | 6 |
| Total | 100 | 0 | 213 | 0 | 0 | 0 | 0 | 192 | 71 | 184 | 183 | 0 | 942 |
| #8 Via Senda at Las Palmas Dr | | | | | | | | | | | | | |
| Base | 0 | 0 | 0 | 231 | 0 | 28 | 28 | 279 | 0 | 0 | 276 | 275 | 1117 |
| Added | 0 | 0 | 0 | 3 | 0 | 0 | 0 | 0 | 0 | 0 | 0 | 3 | 6 |
| Total | 0 | 0 | 0 | 234 | 0 | 28 | 28 | 279 | 0 | 0 | 276 | 278 | 1123 |
| #9 Las Palmas/S La Cumbre Rd at US-101 SB Ramps | | | | | | | | | | | | | |
| Base | 0 | 320 | 147 | 611 | 393 | 0 | 616 | 1 | 77 | 0 | 0 | 0 | 2164 |
| Added | 0 | 3 | 0 | 0 | 0 | 0 | 0 | 0 | 2 | 0 | 0 | 0 | 5 |
| Total | 0 | 323 | 147 | 611 | 393 | 0 | 616 | 1 | 79 | 0 | 0 | 0 | 2169 |

Valle Verde Home Project
Existing+Ambient+Project (Proposed Project)
PM Peak Hour

Impact Analysis Report
Level Of Service

| Intersection | Base LOS | Base Del/ Veh | Base V/ C | Future LOS | Future Del/ Veh | Future V/ C | Change in |
|---|---|---|---|---|---|---|---|
| # 6 Calle de los Amigos at Modoc R | C | 15.2 | 0.000 | C | 15.4 | 0.000 | + 0.172 D/V |
| # 7 Via Senda at Modoc Rd | B | 12.2 | 0.535 | B | 12.3 | 0.541 | + 0.005 V/C |
| # 8 Via Senda at Las Palmas Dr | B | 12.2 | 0.471 | B | 12.2 | 0.473 | + 0.002 V/C |
| # 9 Las Palmas/S La Cumbre Rd at | B | xxxxx | 0.680 | B | xxxxx | 0.681 | + 0.001 V/C |

Traffix 7.9.0215 (c) 2008 Dowling Assoc. Licensed to MMA, LONG BEACH, CA

Valle Verde Home Project
Existing+Ambient+Project (Proposed Project)
PM Peak Hour

Level Of Service Computation Report
2000 HCM Unsignalized Method (Future Volume Alternative)

Intersection #6 Calle de los Amigos at Modoc Rd

Average Delay (sec/veh): 2.4  Worst Case Level Of Service: C[ 15.4]

| Street Name: | Calle de los Amigos | | | | | | | | | Modoc Rd | | |
|---|---|---|---|---|---|---|---|---|---|---|---|---|
| Approach: | North Bound | | | South Bound | | | East Bound | | | West Bound | | |
| Movement: | L - T - R | | | L - T - R | | | L - T - R | | | L - T - R | | |
| Control: | Stop Sign | | | Stop Sign | | | Uncontrolled | | | Uncontrolled | | |
| Rights: | Include | | | Include | | | Include | | | Include | | |
| Lanes: | 1 0 0 0 1 | | | 0 0 0 0 0 | | | 0 0 0 1 0 | | | 1 0 1 0 0 | | |
| Volume Module: | | | | | | | | | | | | |
| Base Vol: | 70 | 0 | 35 | 0 | 0 | 0 | 0 | 328 | 109 | 48 | 275 | 0 |
| Growth Adj: | 1.02 | 1.02 | 1.02 | 1.02 | 1.02 | 1.02 | 1.02 | 1.02 | 1.02 | 1.02 | 1.02 | 1.02 |
| Initial Bse: | 71 | 0 | 36 | 0 | 0 | 0 | 0 | 335 | 111 | 49 | 281 | 0 |
| Added Vol: | 3 | 0 | 1 | 0 | 0 | 0 | 0 | 0 | 3 | 1 | 0 | 0 |
| PasserByVol: | 0 | 0 | 0 | 0 | 0 | 0 | 0 | 0 | 0 | 0 | 0 | 0 |
| Initial Fut: | 74 | 0 | 37 | 0 | 0 | 0 | 0 | 335 | 114 | 50 | 281 | 0 |
| User Adj: | 1.00 | 1.00 | 1.00 | 1.00 | 1.00 | 1.00 | 1.00 | 1.00 | 1.00 | 1.00 | 1.00 | 1.00 |
| PHF Adj: | 1.00 | 1.00 | 1.00 | 1.00 | 1.00 | 1.00 | 1.00 | 1.00 | 1.00 | 1.00 | 1.00 | 1.00 |
| PHF Volume: | 74 | 0 | 37 | 0 | 0 | 0 | 0 | 335 | 114 | 50 | 281 | 0 |
| Reduct Vol: | 0 | 0 | 0 | 0 | 0 | 0 | 0 | 0 | 0 | 0 | 0 | 0 |
| FinalVolume: | 74 | 0 | 37 | 0 | 0 | 0 | 0 | 335 | 114 | 50 | 281 | 0 |
| Critical Gap Module: | | | | | | | | | | | | |
| Critical Gp: | 6.4 | xxxx | 6.2 | xxxxx | xxxx | xxxxx | xxxxx | xxxx | xxxxx | 4.1 | xxxx | xxxxx |
| FollowUpTim: | 3.5 | xxxx | 3.3 | xxxxx | xxxx | xxxxx | xxxxx | xxxx | xxxxx | 2.2 | xxxx | xxxxx |
| Capacity Module: | | | | | | | | | | | | |
| Cnflict Vol: | 772 | xxxx | 392 | xxxx | xxxx | xxxxx | xxxx | xxxx | xxxxx | 449 | xxxx | xxxxx |
| Potent Cap.: | 371 | xxxx | 661 | xxxx | xxxx | xxxxx | xxxx | xxxx | xxxxx | 1122 | xxxx | xxxxx |
| Move Cap.: | 358 | xxxx | 661 | xxxx | xxxx | xxxxx | xxxx | xxxx | xxxxx | 1122 | xxxx | xxxxx |
| Volume/Cap: | 0.21 | xxxx | 0.06 | xxxx | xxxx | xxxx | xxxx | xxxx | xxxx | 0.04 | xxxx | xxxx |
| Level Of Service Module: | | | | | | | | | | | | |
| 2Way95thQ: | 0.8 | xxxx | 0.2 | xxxx | xxxx | xxxxx | xxxx | xxxx | xxxxx | 0.1 | xxxx | xxxxx |
| Control Del: | 17.7 | xxxx | 10.8 | xxxxx | xxxx | xxxxx | xxxxx | xxxx | xxxxx | 8.4 | xxxx | xxxxx |
| LOS by Move: | C | * | B | * | * | * | * | * | * | A | * | * |
| Movement: | LT - LTR - RT | | | LT - LTR - RT | | | LT - LTR - RT | | | LT - LTR - RT | | |
| Shared Cap.: | xxxx | xxxx | xxxxx | xxxx | xxxx | xxxxx | xxxx | xxxx | xxxxx | xxxx | xxxx | xxxxx |
| SharedQueue: | xxxxx | xxxx | xxxxx | xxxxx | xxxx | xxxxx | xxxxx | xxxx | xxxxx | xxxxx | xxxx | xxxxx |
| Shrd ConDel: | xxxxx | xxxx | xxxxx | xxxxx | xxxx | xxxxx | xxxxx | xxxx | xxxxx | xxxxx | xxxx | xxxxx |
| Shared LOS: | * | * | * | * | * | * | * | * | * | * | * | * |
| ApproachDel: | 15.4 | | | xxxxxx | | | xxxxxx | | | xxxxxx | | |
| ApproachLOS: | C | | | * | | | * | | | * | | |

Note: Queue reported is the number of cars per lane.

Valle Verde Home Project
Existing+Ambient+Project (Proposed Project)
PM Peak Hour

Level Of Service Computation Report
2000 HCM 4-Way Stop Method (Future Volume Alternative)

Intersection #7 Via Senda at Modoc Rd

| | | | |
|---|---|---|---|
| Cycle (sec): | 100 | Critical Vol./Cap.(X): | 0.541 |
| Loss Time (sec): | 0 (Y+R=4.0 sec) | Average Delay (sec/veh): | 12.3 |
| Optimal Cycle: | 0 | Level Of Service: | B |

| Street Name: | Via Senda | | | | | | Modoc Rd | | | | | |
|---|---|---|---|---|---|---|---|---|---|---|---|---|
| Approach: | North Bound | | | South Bound | | | East Bound | | | West Bound | | |
| Movement: | L - | T - | R | L - | T - | R | L - | T - | R | L - | T - | R |
| Control: | Stop Sign | | | Stop Sign | | | Stop Sign | | | Stop Sign | | |
| Rights: | Include | | | Include | | | Include | | | Include | | |
| Min. Green: | 0 | 0 | 0 | 0 | 0 | 0 | 0 | 0 | 0 | 0 | 0 | 0 |
| Lanes: | 0 0 | 1! 0 | 0 | 0 0 | 0 0 | 0 | 0 0 | 0 1 | 0 | 0 1 | 0 0 | 0 |
| Volume Module: | | | | | | | | | | | | |
| Base Vol: | 98 | 0 | 206 | 0 | 0 | 0 | 0 | 188 | 70 | 177 | 179 | 0 |
| Growth Adj: | 1.02 1.02 | 1.02 | | 1.02 1.02 | 1.02 | | 1.02 1.02 | 1.02 | | 1.02 1.02 | 1.02 | |
| Initial Bse: | 100 | 0 | 210 | 0 | 0 | 0 | 0 | 192 | 71 | 181 | 183 | 0 |
| Added Vol: | 0 | 0 | 3 | 0 | 0 | 0 | 0 | 0 | 0 | 3 | 0 | 0 |
| PasserByVol: | 0 | 0 | 0 | 0 | 0 | 0 | 0 | 0 | 0 | 0 | 0 | 0 |
| Initial Fut: | 100 | 0 | 213 | 0 | 0 | 0 | 0 | 192 | 71 | 184 | 183 | 0 |
| User Adj: | 1.00 1.00 | 1.00 | | 1.00 1.00 | 1.00 | | 1.00 1.00 | 1.00 | | 1.00 1.00 | 1.00 | |
| PHF Adj: | 1.00 1.00 | 1.00 | | 1.00 1.00 | 1.00 | | 1.00 1.00 | 1.00 | | 1.00 1.00 | 1.00 | |
| PHF Volume: | 100 | 0 | 213 | 0 | 0 | 0 | 0 | 192 | 71 | 184 | 183 | 0 |
| Reduct Vol: | 0 | 0 | 0 | 0 | 0 | 0 | 0 | 0 | 0 | 0 | 0 | 0 |
| Reduced Vol: | 100 | 0 | 213 | 0 | 0 | 0 | 0 | 192 | 71 | 184 | 183 | 0 |
| PCE Adj: | 1.00 1.00 | 1.00 | | 1.00 1.00 | 1.00 | | 1.00 1.00 | 1.00 | | 1.00 1.00 | 1.00 | |
| MLF Adj: | 1.00 1.00 | 1.00 | | 1.00 1.00 | 1.00 | | 1.00 1.00 | 1.00 | | 1.00 1.00 | 1.00 | |
| FinalVolume: | 100 | 0 | 213 | 0 | 0 | 0 | 0 | 192 | 71 | 184 | 183 | 0 |
| Saturation Flow Module: | | | | | | | | | | | | |
| Adjustment: | 1.00 1.00 | 1.00 | | 1.00 1.00 | 1.00 | | 1.00 1.00 | 1.00 | | 1.00 1.00 | 1.00 | |
| Lanes: | 0.32 0.00 | 0.68 | | 0.00 0.00 | 0.00 | | 0.00 0.73 | 0.27 | | 0.50 0.50 | 0.00 | |
| Final Sat.: | 216 | 0 | 460 | 0 | 0 | 0 | 0 | 497 | 185 | 340 | 338 | 0 |
| Capacity Analysis Module: | | | | | | | | | | | | |
| Vol/Sat: | 0.46 xxxx | 0.46 | | xxxx xxxx | xxxx | | xxxx 0.39 | 0.39 | | 0.54 0.54 | xxxx | |
| Crit Moves: | | **** | | | | | **** | | | **** | | |
| Delay/Veh: | 11.9 0.0 | 11.9 | | 0.0 0.0 | 0.0 | | 0.0 10.9 | 10.9 | | 13.7 13.7 | 0.0 | |
| Delay Adj: | 1.00 1.00 | 1.00 | | 1.00 1.00 | 1.00 | | 1.00 1.00 | 1.00 | | 1.00 1.00 | 1.00 | |
| AdjDel/Veh: | 11.9 0.0 | 11.9 | | 0.0 0.0 | 0.0 | | 0.0 10.9 | 10.9 | | 13.7 13.7 | 0.0 | |
| LOS by Move: | B * | B | | * * | * | | * B | B | | B B | * | |
| ApproachDel: | 11.9 | | | xxxxxx | | | 10.9 | | | 13.7 | | |
| Delay Adj: | 1.00 | | | xxxxx | | | 1.00 | | | 1.00 | | |
| ApprAdjDel: | 11.9 | | | xxxxxx | | | 10.9 | | | 13.7 | | |
| LOS by Appr: | B | | | * | | | B | | | B | | |
| AllWayAvgQ: | 0.7 0.7 | 0.7 | | 0.0 0.0 | 0.0 | | 0.5 0.5 | 0.5 | | 1.0 1.0 | 1.0 | |

Note: Queue reported is the number of cars per lane.

Traffix 7.9.0215 (c) 2008 Dowling Assoc. Licensed to MMA, LONG BEACH, CA

Valle Verde Home Project
Existing+Ambient+Project (Proposed Project)
PM Peak Hour

Level Of Service Computation Report
2000 HCM 4-Way Stop Method (Future Volume Alternative)

Intersection #8 Via Senda at Las Palmas Dr

Cycle (sec): 100 | Critical Vol./Cap.(X): 0.473
Loss Time (sec): 0 (Y+R=4.0 sec) | Average Delay (sec/veh): 12.2
Optimal Cycle: 0 | Level Of Service: B

| Street Name: | Via Senda | | | | | | Las Palmas Dr | | | | | |
|---|---|---|---|---|---|---|---|---|---|---|---|---|
| Approach: | North Bound | | | South Bound | | | East Bound | | | West Bound | | |
| Movement: | L - | T - | R | L - | T - | R | L - | T - | R | L - | T - | R |
| Control: | Stop Sign | | | Stop Sign | | | Stop Sign | | | Stop Sign | | |
| Rights: | Include | | | Include | | | Include | | | Include | | |
| Min. Green: | 0 | 0 | 0 | 0 | 0 | 0 | 0 | 0 | 0 | 0 | 0 | 0 |
| Lanes: | 0 0 | 0 0 | 0 | 0 0 | 1! 0 | 0 | 0 1 | 0 0 | 0 | 0 0 | 1 0 | 1 |
| Volume Module: | | | | | | | | | | | | |
| Base Vol: | 0 | 0 | 0 | 226 | 0 | 27 | 27 | 274 | 0 | 0 | 271 | 270 |
| Growth Adj: | 1.02 | 1.02 | 1.02 | 1.02 | 1.02 | 1.02 | 1.02 | 1.02 | 1.02 | 1.02 | 1.02 | 1.02 |
| Initial Bse: | 0 | 0 | 0 | 231 | 0 | 28 | 28 | 279 | 0 | 0 | 276 | 275 |
| Added Vol: | 0 | 0 | 0 | 3 | 0 | 0 | 0 | 0 | 0 | 0 | 0 | 3 |
| PasserByVol: | 0 | 0 | 0 | 0 | 0 | 0 | 0 | 0 | 0 | 0 | 0 | 0 |
| Initial Fut: | 0 | 0 | 0 | 234 | 0 | 28 | 28 | 279 | 0 | 0 | 276 | 278 |
| User Adj: | 1.00 | 1.00 | 1.00 | 1.00 | 1.00 | 1.00 | 1.00 | 1.00 | 1.00 | 1.00 | 1.00 | 1.00 |
| PHF Adj: | 1.00 | 1.00 | 1.00 | 1.00 | 1.00 | 1.00 | 1.00 | 1.00 | 1.00 | 1.00 | 1.00 | 1.00 |
| PHF Volume: | 0 | 0 | 0 | 234 | 0 | 28 | 28 | 279 | 0 | 0 | 276 | 278 |
| Reduct Vol: | 0 | 0 | 0 | 0 | 0 | 0 | 0 | 0 | 0 | 0 | 0 | 0 |
| Reduced Vol: | 0 | 0 | 0 | 234 | 0 | 28 | 28 | 279 | 0 | 0 | 276 | 278 |
| PCE Adj: | 1.00 | 1.00 | 1.00 | 1.00 | 1.00 | 1.00 | 1.00 | 1.00 | 1.00 | 1.00 | 1.00 | 1.00 |
| MLF Adj: | 1.00 | 1.00 | 1.00 | 1.00 | 1.00 | 1.00 | 1.00 | 1.00 | 1.00 | 1.00 | 1.00 | 1.00 |
| FinalVolume: | 0 | 0 | 0 | 234 | 0 | 28 | 28 | 279 | 0 | 0 | 276 | 278 |
| Saturation Flow Module: | | | | | | | | | | | | |
| Adjustment: | 1.00 | 1.00 | 1.00 | 1.00 | 1.00 | 1.00 | 1.00 | 1.00 | 1.00 | 1.00 | 1.00 | 1.00 |
| Lanes: | 0.00 | 0.00 | 0.00 | 0.89 | 0.00 | 0.11 | 0.09 | 0.91 | 0.00 | 0.00 | 1.00 | 1.00 |
| Final Sat.: | 0 | 0 | 0 | 529 | 0 | 62 | 58 | 591 | 0 | 0 | 628 | 716 |
| Capacity Analysis Module: | | | | | | | | | | | | |
| Vol/Sat: | xxxx | xxxx | xxxx | 0.44 | xxxx | 0.44 | 0.47 | 0.47 | xxxx | xxxx | 0.44 | 0.39 |
| Crit Moves: | | | | **** | | | | **** | | | **** | |
| Delay/Veh: | 0.0 | 0.0 | 0.0 | 12.9 | 0.0 | 12.9 | 12.9 | 12.9 | 0.0 | 0.0 | 12.5 | 10.6 |
| Delay Adj: | 1.00 | 1.00 | 1.00 | 1.00 | 1.00 | 1.00 | 1.00 | 1.00 | 1.00 | 1.00 | 1.00 | 1.00 |
| AdjDel/Veh: | 0.0 | 0.0 | 0.0 | 12.9 | 0.0 | 12.9 | 12.9 | 12.9 | 0.0 | 0.0 | 12.5 | 10.6 |
| LOS by Move: | * | * | * | B | * | B | B | B | * | * | B | B |
| ApproachDel: | xxxxxx | | | 12.9 | | | 12.9 | | | 11.6 | | |
| Delay Adj: | xxxxx | | | 1.00 | | | 1.00 | | | 1.00 | | |
| ApprAdjDel: | xxxxxx | | | 12.9 | | | 12.9 | | | 11.6 | | |
| LOS by Appr: | * | | | B | | | B | | | B | | |
| AllWayAvgQ: | 0.0 | 0.0 | 0.0 | 0.7 | 0.7 | 0.7 | 0.8 | 0.8 | 0.8 | 0.0 | 0.7 | 0.6 |

Note: Queue reported is the number of cars per lane.

Traffix 7.9.0215 (c) 2008 Dowling Assoc. Licensed to MMA, LONG BEACH, CA

Valle Verde Home Project
Existing+Ambient+Project (Proposed Project)
PM Peak Hour

Level Of Service Computation Report
ICU 1(Loss as Cycle Length %) Method (Future Volume Alternative)

Intersection #9 Las Palmas/S La Cumbre Rd at US-101 SB Ramps

| | | | |
|---|---|---|---|
| Cycle (sec): | 100 | Critical Vol./Cap.(X): | 0.681 |
| Loss Time (sec): | 10 (Y+R=4.0 sec) | Average Delay (sec/veh): | xxxxxx |
| Optimal Cycle: | 48 | Level Of Service: | B |

| Approach: | North Bound | | | South Bound | | | East Bound | | | West Bound | | |
|---|---|---|---|---|---|---|---|---|---|---|---|---|
| Movement: | L - | T - | R | L - | T - | R | L - | T - | R | L - | T - | R |
| Control: | Protected | | | Protected | | | Protected | | | Protected | | |
| Rights: | Include | | | Include | | | Include | | | Include | | |
| Min. Green: | 0 | 0 | 0 | 0 | 0 | 0 | 0 | 0 | 0 | 0 | 0 | 0 |
| Lanes: | 0 0 | 2 0 | 1 | 2 0 | 1 0 | 0 | 1 1 | 0 0 | 1 | 0 0 | 0 0 | 0 |
| Volume Module: | | | | | | | | | | | | |
| Base Vol: | 0 | 314 | 144 | 599 | 385 | 0 | 604 | 1 | 75 | 0 | 0 | 0 |
| Growth Adj: | 1.02 | 1.02 | 1.02 | 1.02 | 1.02 | 1.02 | 1.02 | 1.02 | 1.02 | 1.02 | 1.02 | 1.02 |
| Initial Bse: | 0 | 320 | 147 | 611 | 393 | 0 | 616 | 1 | 77 | 0 | 0 | 0 |
| Added Vol: | 0 | 3 | 0 | 0 | 0 | 0 | 0 | 0 | 2 | 0 | 0 | 0 |
| PasserByVol: | 0 | 0 | 0 | 0 | 0 | 0 | 0 | 0 | 0 | 0 | 0 | 0 |
| Initial Fut: | 0 | 323 | 147 | 611 | 393 | 0 | 616 | 1 | 79 | 0 | 0 | 0 |
| User Adj: | 1.00 | 1.00 | 1.00 | 1.00 | 1.00 | 1.00 | 1.00 | 1.00 | 1.00 | 1.00 | 1.00 | 1.00 |
| PHF Adj: | 1.00 | 1.00 | 1.00 | 1.00 | 1.00 | 1.00 | 1.00 | 1.00 | 1.00 | 1.00 | 1.00 | 1.00 |
| PHF Volume: | 0 | 323 | 147 | 611 | 393 | 0 | 616 | 1 | 79 | 0 | 0 | 0 |
| Reduct Vol: | 0 | 0 | 0 | 0 | 0 | 0 | 0 | 0 | 0 | 0 | 0 | 0 |
| Reduced Vol: | 0 | 323 | 147 | 611 | 393 | 0 | 616 | 1 | 79 | 0 | 0 | 0 |
| PCE Adj: | 1.00 | 1.00 | 1.00 | 1.00 | 1.00 | 1.00 | 1.00 | 1.00 | 1.00 | 1.00 | 1.00 | 1.00 |
| MLF Adj: | 1.00 | 1.00 | 1.00 | 1.00 | 1.00 | 1.00 | 1.00 | 1.00 | 1.00 | 1.00 | 1.00 | 1.00 |
| FinalVolume: | 0 | 323 | 147 | 611 | 393 | 0 | 616 | 1 | 79 | 0 | 0 | 0 |
| Saturation Flow Module: | | | | | | | | | | | | |
| Sat/Lane: | 1600 | 1600 | 1600 | 1600 | 1600 | 1600 | 1600 | 1600 | 1600 | 1600 | 1600 | 1600 |
| Adjustment: | 1.00 | 1.00 | 1.00 | 0.80 | 1.00 | 1.00 | 0.80 | 1.00 | 1.00 | 1.00 | 1.00 | 1.00 |
| Lanes: | 0.00 | 2.00 | 1.00 | 2.00 | 1.00 | 0.00 | 1.99 | 0.01 | 1.00 | 0.00 | 0.00 | 0.00 |
| Final Sat.: | 0 | 3200 | 1600 | 2560 | 1600 | 0 | 2556 | 5 | 1600 | 0 | 0 | 0 |
| Capacity Analysis Module: | | | | | | | | | | | | |
| Vol/Sat: | 0.00 | 0.10 | 0.09 | 0.24 | 0.25 | 0.00 | 0.24 | 0.19 | 0.05 | 0.00 | 0.00 | 0.00 |
| Crit Moves: | | **** | | **** | | | **** | | | | | |

Valle Verde Home Project
Existing+Ambient+Project (Proposed Project)
PM Peak Hour

Scenario Report

| | |
|---|---|
| Scenario: | E+A+P Alt1 PM |
| Command: | E+A+P Alt1 PM |
| Volume: | E+A PM |
| Geometry: | Existing |
| Impact Fee: | Default Impact Fee |
| Trip Generation: | PM Peak |
| Trip Distribution: | Trip Distribution |
| Paths: | Default Path |
| Routes: | Default Route |
| Configuration: | E+A+P Alt1 PM |

Valle Verde Home Project
Existing+Ambient+Project (Proposed Project)
PM Peak Hour

Trip Generation Report

Forecast for PM Peak

| Zone # | Subzone | Amount | Units | Rate In | Rate Out | Trips In | Trips Out | Total Trips | % Of Total |
|---|---|---|---|---|---|---|---|---|---|
| 101 | Project (Val | 1.00 | Residential | 6.00 | 6.00 | 6 | 6 | 12 | 100.0 |
| | Zone 101 Subtotal ..... | | | | | 6 | 6 | 12 | 100.0 |
| TOTAL ..... | | | | | | 6 | 6 | 12 | 100.0 |

Trip Distribution Report

Percent Of Trips Distribution

To Gates

| Zone | 1 | 2 | 3 | 4 | 5 | 7 | 8 | 10 |
|---|---|---|---|---|---|---|---|---|
| 101 | 5.0 | 5.0 | 40.0 | 30.0 | 5.0 | 0.0 | 10.0 | 5.0 |

Valle Verde Home Project
Existing+Ambient+Project (Proposed Project)
PM Peak Hour

Turning Movement Report
PM Peak

| Volume | Northbound | | | Southbound | | | Eastbound | | | Westbound | | | Total |
|---|---|---|---|---|---|---|---|---|---|---|---|---|---|
| Type | Left | Thru | Right | Left | Thru | Right | Left | Thru | Right | Left | Thru | Right | Volume |
| #6 Calle de los Amigos at Modoc Rd | | | | | | | | | | | | | |
| Base | 71 | 0 | 36 | 0 | 0 | 0 | 0 | 335 | 111 | 49 | 281 | 0 | 882 |
| Added | 3 | 0 | 1 | 0 | 0 | 0 | 0 | 0 | 3 | 1 | 0 | 0 | 8 |
| Total | 74 | 0 | 37 | 0 | 0 | 0 | 0 | 335 | 114 | 50 | 281 | 0 | 890 |
| #7 Via Senda at Modoc Rd | | | | | | | | | | | | | |
| Base | 100 | 0 | 210 | 0 | 0 | 0 | 0 | 192 | 71 | 181 | 183 | 0 | 936 |
| Added | 0 | 0 | 3 | 0 | 0 | 0 | 0 | 0 | 0 | 3 | 0 | 0 | 6 |
| Total | 100 | 0 | 213 | 0 | 0 | 0 | 0 | 192 | 71 | 184 | 183 | 0 | 942 |
| #8 Via Senda at Las Palmas Dr | | | | | | | | | | | | | |
| Base | 0 | 0 | 0 | 231 | 0 | 28 | 28 | 279 | 0 | 0 | 276 | 275 | 1117 |
| Added | 0 | 0 | 0 | 3 | 0 | 0 | 0 | 0 | 0 | 0 | 0 | 3 | 6 |
| Total | 0 | 0 | 0 | 234 | 0 | 28 | 28 | 279 | 0 | 0 | 276 | 278 | 1123 |
| #9 Las Palmas/S La Cumbre Rd at US-101 SB Ramps | | | | | | | | | | | | | |
| Base | 0 | 320 | 147 | 611 | 393 | 0 | 616 | 1 | 77 | 0 | 0 | 0 | 2164 |
| Added | 0 | 3 | 0 | 0 | 0 | 0 | 0 | 0 | 2 | 0 | 0 | 0 | 5 |
| Total | 0 | 323 | 147 | 611 | 393 | 0 | 616 | 1 | 79 | 0 | 0 | 0 | 2169 |

Valle Verde Home Project
Existing+Ambient+Project (Proposed Project)
PM Peak Hour

Impact Analysis Report
Level Of Service

| Intersection | Base LOS | Base Del/ Veh | Base V/ C | Future LOS | Future Del/ Veh | Future V/ C | Change in |
|---|---|---|---|---|---|---|---|
| # 6 Calle de los Amigos at Modoc R | C | 15.2 | 0.000 | C | 15.4 | 0.000 | + 0.172 D/V |
| # 7 Via Senda at Modoc Rd | B | 12.2 | 0.535 | B | 12.3 | 0.541 | + 0.005 V/C |
| # 8 Via Senda at Las Palmas Dr | B | 12.2 | 0.471 | B | 12.2 | 0.473 | + 0.002 V/C |
| # 9 Las Palmas/S La Cumbre Rd at | C | 27.5 | 0.601 | C | 27.5 | 0.602 | + 0.007 D/V |

Traffix 7.9.0215 (c) 2008 Dowling Assoc. Licensed to MMA, LONG BEACH, CA

Valle Verde Home Project
Existing+Ambient+Project (Proposed Project)
PM Peak Hour

Level Of Service Computation Report
2000 HCM Unsignalized Method (Future Volume Alternative)

Intersection #6 Calle de los Amigos at Modoc Rd

Average Delay (sec/veh): 2.4  Worst Case Level Of Service: C[ 15.4]

| Street Name: | Calle de los Amigos | | | | | | | | | Modoc Rd | | |
|---|---|---|---|---|---|---|---|---|---|---|---|---|
| Approach: | North Bound | | | South Bound | | | East Bound | | | West Bound | | |
| Movement: | L - T - R | | | L - T - R | | | L - T - R | | | L - T - R | | |
| Control: | Stop Sign | | | Stop Sign | | | Uncontrolled | | | Uncontrolled | | |
| Rights: | Include | | | Include | | | Include | | | Include | | |
| Lanes: | 1 0 0 0 1 | | | 0 0 0 0 0 | | | 0 0 0 1 0 | | | 1 0 1 0 0 | | |
| Volume Module: | | | | | | | | | | | | |
| Base Vol: | 70 | 0 | 35 | 0 | 0 | 0 | 0 | 328 | 109 | 48 | 275 | 0 |
| Growth Adj: | 1.02 | 1.02 | 1.02 | 1.02 | 1.02 | 1.02 | 1.02 | 1.02 | 1.02 | 1.02 | 1.02 | 1.02 |
| Initial Bse: | 71 | 0 | 36 | 0 | 0 | 0 | 0 | 335 | 111 | 49 | 281 | 0 |
| Added Vol: | 3 | 0 | 1 | 0 | 0 | 0 | 0 | 0 | 3 | 1 | 0 | 0 |
| PasserByVol: | 0 | 0 | 0 | 0 | 0 | 0 | 0 | 0 | 0 | 0 | 0 | 0 |
| Initial Fut: | 74 | 0 | 37 | 0 | 0 | 0 | 0 | 335 | 114 | 50 | 281 | 0 |
| User Adj: | 1.00 | 1.00 | 1.00 | 1.00 | 1.00 | 1.00 | 1.00 | 1.00 | 1.00 | 1.00 | 1.00 | 1.00 |
| PHF Adj: | 1.00 | 1.00 | 1.00 | 1.00 | 1.00 | 1.00 | 1.00 | 1.00 | 1.00 | 1.00 | 1.00 | 1.00 |
| PHF Volume: | 74 | 0 | 37 | 0 | 0 | 0 | 0 | 335 | 114 | 50 | 281 | 0 |
| Reduct Vol: | 0 | 0 | 0 | 0 | 0 | 0 | 0 | 0 | 0 | 0 | 0 | 0 |
| FinalVolume: | 74 | 0 | 37 | 0 | 0 | 0 | 0 | 335 | 114 | 50 | 281 | 0 |
| Critical Gap Module: | | | | | | | | | | | | |
| Critical Gp: | 6.4 | xxxx | 6.2 | xxxxx | xxxx | xxxxx | xxxxx | xxxx | xxxxx | 4.1 | xxxx | xxxxx |
| FollowUpTim: | 3.5 | xxxx | 3.3 | xxxxx | xxxx | xxxxx | xxxxx | xxxx | xxxxx | 2.2 | xxxx | xxxxx |
| Capacity Module: | | | | | | | | | | | | |
| Cnflict Vol: | 772 | xxxx | 392 | xxxx | xxxx | xxxxx | xxxx | xxxx | xxxxx | 449 | xxxx | xxxxx |
| Potent Cap.: | 371 | xxxx | 661 | xxxx | xxxx | xxxxx | xxxx | xxxx | xxxxx | 1122 | xxxx | xxxxx |
| Move Cap.: | 358 | xxxx | 661 | xxxx | xxxx | xxxxx | xxxx | xxxx | xxxxx | 1122 | xxxx | xxxxx |
| Volume/Cap: | 0.21 | xxxx | 0.06 | xxxx | xxxx | xxxx | xxxx | xxxx | xxxx | 0.04 | xxxx | xxxx |
| Level Of Service Module: | | | | | | | | | | | | |
| 2Way95thQ: | 0.8 | xxxx | 0.2 | xxxx | xxxx | xxxxx | xxxx | xxxx | xxxxx | 0.1 | xxxx | xxxxx |
| Control Del: | 17.7 | xxxx | 10.8 | xxxxx | xxxx | xxxxx | xxxxx | xxxx | xxxxx | 8.4 | xxxx | xxxxx |
| LOS by Move: | C | * | B | * | * | * | * | * | * | A | * | * |
| Movement: | LT - LTR - RT | | | LT - LTR - RT | | | LT - LTR - RT | | | LT - LTR - RT | | |
| Shared Cap.: | xxxx | xxxx | xxxxx | xxxx | xxxx | xxxxx | xxxx | xxxx | xxxxx | xxxx | xxxx | xxxxx |
| SharedQueue: | xxxxx | xxxx | xxxxx | xxxxx | xxxx | xxxxx | xxxxx | xxxx | xxxxx | xxxxx | xxxx | xxxxx |
| Shrd ConDel: | xxxxx | xxxx | xxxxx | xxxxx | xxxx | xxxxx | xxxxx | xxxx | xxxxx | xxxxx | xxxx | xxxxx |
| Shared LOS: | * | * | * | * | * | * | * | * | * | * | * | * |
| ApproachDel: | 15.4 | | | xxxxxx | | | xxxxxx | | | xxxxxx | | |
| ApproachLOS: | C | | | * | | | * | | | * | | |

Note: Queue reported is the number of cars per lane.

Valle Verde Home Project
Existing+Ambient+Project (Proposed Project)
PM Peak Hour

Level Of Service Computation Report
2000 HCM 4-Way Stop Method (Future Volume Alternative)

Intersection #7 Via Senda at Modoc Rd

| | | | |
|---|---|---|---|
| Cycle (sec): | 100 | Critical Vol./Cap.(X): | 0.541 |
| Loss Time (sec): | 0 (Y+R=4.0 sec) | Average Delay (sec/veh): | 12.3 |
| Optimal Cycle: | 0 | Level Of Service: | B |

| Street Name: | Via Senda | | | | | | Modoc Rd | | | | | |
|---|---|---|---|---|---|---|---|---|---|---|---|---|
| Approach: | North Bound | | | South Bound | | | East Bound | | | West Bound | | |
| Movement: | L - | T - | R | L - | T - | R | L - | T - | R | L - | T - | R |
| Control: | Stop Sign | | | Stop Sign | | | Stop Sign | | | Stop Sign | | |
| Rights: | Include | | | Include | | | Include | | | Include | | |
| Min. Green: | 0 | 0 | 0 | 0 | 0 | 0 | 0 | 0 | 0 | 0 | 0 | 0 |
| Lanes: | 0 0 | 1! 0 | 0 | 0 0 | 0 0 | 0 | 0 0 | 0 1 | 0 | 0 1 | 0 0 | 0 |
| Volume Module: | | | | | | | | | | | | |
| Base Vol: | 98 | 0 | 206 | 0 | 0 | 0 | 0 | 188 | 70 | 177 | 179 | 0 |
| Growth Adj: | 1.02 | 1.02 | 1.02 | 1.02 | 1.02 | 1.02 | 1.02 | 1.02 | 1.02 | 1.02 | 1.02 | 1.02 |
| Initial Bse: | 100 | 0 | 210 | 0 | 0 | 0 | 0 | 192 | 71 | 181 | 183 | 0 |
| Added Vol: | 0 | 0 | 3 | 0 | 0 | 0 | 0 | 0 | 0 | 3 | 0 | 0 |
| PasserByVol: | 0 | 0 | 0 | 0 | 0 | 0 | 0 | 0 | 0 | 0 | 0 | 0 |
| Initial Fut: | 100 | 0 | 213 | 0 | 0 | 0 | 0 | 192 | 71 | 184 | 183 | 0 |
| User Adj: | 1.00 | 1.00 | 1.00 | 1.00 | 1.00 | 1.00 | 1.00 | 1.00 | 1.00 | 1.00 | 1.00 | 1.00 |
| PHF Adj: | 1.00 | 1.00 | 1.00 | 1.00 | 1.00 | 1.00 | 1.00 | 1.00 | 1.00 | 1.00 | 1.00 | 1.00 |
| PHF Volume: | 100 | 0 | 213 | 0 | 0 | 0 | 0 | 192 | 71 | 184 | 183 | 0 |
| Reduct Vol: | 0 | 0 | 0 | 0 | 0 | 0 | 0 | 0 | 0 | 0 | 0 | 0 |
| Reduced Vol: | 100 | 0 | 213 | 0 | 0 | 0 | 0 | 192 | 71 | 184 | 183 | 0 |
| PCE Adj: | 1.00 | 1.00 | 1.00 | 1.00 | 1.00 | 1.00 | 1.00 | 1.00 | 1.00 | 1.00 | 1.00 | 1.00 |
| MLF Adj: | 1.00 | 1.00 | 1.00 | 1.00 | 1.00 | 1.00 | 1.00 | 1.00 | 1.00 | 1.00 | 1.00 | 1.00 |
| FinalVolume: | 100 | 0 | 213 | 0 | 0 | 0 | 0 | 192 | 71 | 184 | 183 | 0 |
| Saturation Flow Module: | | | | | | | | | | | | |
| Adjustment: | 1.00 | 1.00 | 1.00 | 1.00 | 1.00 | 1.00 | 1.00 | 1.00 | 1.00 | 1.00 | 1.00 | 1.00 |
| Lanes: | 0.32 | 0.00 | 0.68 | 0.00 | 0.00 | 0.00 | 0.00 | 0.73 | 0.27 | 0.50 | 0.50 | 0.00 |
| Final Sat.: | 216 | 0 | 460 | 0 | 0 | 0 | 0 | 497 | 185 | 340 | 338 | 0 |
| Capacity Analysis Module: | | | | | | | | | | | | |
| Vol/Sat: | 0.46 | xxxx | 0.46 | xxxx | xxxx | xxxx | xxxx | 0.39 | 0.39 | 0.54 | 0.54 | xxxx |
| Crit Moves: | | | **** | | | | | **** | | **** | | |
| Delay/Veh: | 11.9 | 0.0 | 11.9 | 0.0 | 0.0 | 0.0 | 0.0 | 10.9 | 10.9 | 13.7 | 13.7 | 0.0 |
| Delay Adj: | 1.00 | 1.00 | 1.00 | 1.00 | 1.00 | 1.00 | 1.00 | 1.00 | 1.00 | 1.00 | 1.00 | 1.00 |
| AdjDel/Veh: | 11.9 | 0.0 | 11.9 | 0.0 | 0.0 | 0.0 | 0.0 | 10.9 | 10.9 | 13.7 | 13.7 | 0.0 |
| LOS by Move: | B | * | B | * | * | * | * | B | B | B | B | * |
| ApproachDel: | 11.9 | | | xxxxxx | | | 10.9 | | | 13.7 | | |
| Delay Adj: | 1.00 | | | xxxxx | | | 1.00 | | | 1.00 | | |
| ApprAdjDel: | 11.9 | | | xxxxxx | | | 10.9 | | | 13.7 | | |
| LOS by Appr: | B | | | * | | | B | | | B | | |
| AllWayAvgQ: | 0.7 | 0.7 | 0.7 | 0.0 | 0.0 | 0.0 | 0.5 | 0.5 | 0.5 | 1.0 | 1.0 | 1.0 |

Note: Queue reported is the number of cars per lane.

Traffix 7.9.0215 (c) 2008 Dowling Assoc. Licensed to MMA, LONG BEACH, CA

Valle Verde Home Project
Existing+Ambient+Project (Proposed Project)
PM Peak Hour

Level Of Service Computation Report
2000 HCM 4-Way Stop Method (Future Volume Alternative)

Intersection #8 Via Senda at Las Palmas Dr

Cycle (sec): 100 | Critical Vol./Cap.(X): 0.473
Loss Time (sec): 0 (Y+R=4.0 sec) | Average Delay (sec/veh): 12.2
Optimal Cycle: 0 | Level Of Service: B

| Street Name: | Via Senda | | | | | | Las Palmas Dr | | | | | |
|---|---|---|---|---|---|---|---|---|---|---|---|---|
| Approach: | North Bound | | | South Bound | | | East Bound | | | West Bound | | |
| Movement: | L - | T - | R | L - | T - | R | L - | T - | R | L - | T - | R |
| Control: | Stop Sign | | | Stop Sign | | | Stop Sign | | | Stop Sign | | |
| Rights: | Include | | | Include | | | Include | | | Include | | |
| Min. Green: | 0 | 0 | 0 | 0 | 0 | 0 | 0 | 0 | 0 | 0 | 0 | 0 |
| Lanes: | 0 0 | 0 0 | 0 | 0 0 | 1! 0 | 0 | 0 1 | 0 0 | 0 | 0 0 | 1 0 | 1 |
| Volume Module: | | | | | | | | | | | | |
| Base Vol: | 0 | 0 | 0 | 226 | 0 | 27 | 27 | 274 | 0 | 0 | 271 | 270 |
| Growth Adj: | 1.02 | 1.02 | 1.02 | 1.02 | 1.02 | 1.02 | 1.02 | 1.02 | 1.02 | 1.02 | 1.02 | 1.02 |
| Initial Bse: | 0 | 0 | 0 | 231 | 0 | 28 | 28 | 279 | 0 | 0 | 276 | 275 |
| Added Vol: | 0 | 0 | 0 | 3 | 0 | 0 | 0 | 0 | 0 | 0 | 0 | 3 |
| PasserByVol: | 0 | 0 | 0 | 0 | 0 | 0 | 0 | 0 | 0 | 0 | 0 | 0 |
| Initial Fut: | 0 | 0 | 0 | 234 | 0 | 28 | 28 | 279 | 0 | 0 | 276 | 278 |
| User Adj: | 1.00 | 1.00 | 1.00 | 1.00 | 1.00 | 1.00 | 1.00 | 1.00 | 1.00 | 1.00 | 1.00 | 1.00 |
| PHF Adj: | 1.00 | 1.00 | 1.00 | 1.00 | 1.00 | 1.00 | 1.00 | 1.00 | 1.00 | 1.00 | 1.00 | 1.00 |
| PHF Volume: | 0 | 0 | 0 | 234 | 0 | 28 | 28 | 279 | 0 | 0 | 276 | 278 |
| Reduct Vol: | 0 | 0 | 0 | 0 | 0 | 0 | 0 | 0 | 0 | 0 | 0 | 0 |
| Reduced Vol: | 0 | 0 | 0 | 234 | 0 | 28 | 28 | 279 | 0 | 0 | 276 | 278 |
| PCE Adj: | 1.00 | 1.00 | 1.00 | 1.00 | 1.00 | 1.00 | 1.00 | 1.00 | 1.00 | 1.00 | 1.00 | 1.00 |
| MLF Adj: | 1.00 | 1.00 | 1.00 | 1.00 | 1.00 | 1.00 | 1.00 | 1.00 | 1.00 | 1.00 | 1.00 | 1.00 |
| FinalVolume: | 0 | 0 | 0 | 234 | 0 | 28 | 28 | 279 | 0 | 0 | 276 | 278 |
| Saturation Flow Module: | | | | | | | | | | | | |
| Adjustment: | 1.00 | 1.00 | 1.00 | 1.00 | 1.00 | 1.00 | 1.00 | 1.00 | 1.00 | 1.00 | 1.00 | 1.00 |
| Lanes: | 0.00 | 0.00 | 0.00 | 0.89 | 0.00 | 0.11 | 0.09 | 0.91 | 0.00 | 0.00 | 1.00 | 1.00 |
| Final Sat.: | 0 | 0 | 0 | 529 | 0 | 62 | 58 | 591 | 0 | 0 | 628 | 716 |
| Capacity Analysis Module: | | | | | | | | | | | | |
| Vol/Sat: | xxxx | xxxx | xxxx | 0.44 | xxxx | 0.44 | 0.47 | 0.47 | xxxx | xxxx | 0.44 | 0.39 |
| Crit Moves: | | | | **** | | | | **** | | | **** | |
| Delay/Veh: | 0.0 | 0.0 | 0.0 | 12.9 | 0.0 | 12.9 | 12.9 | 12.9 | 0.0 | 0.0 | 12.5 | 10.6 |
| Delay Adj: | 1.00 | 1.00 | 1.00 | 1.00 | 1.00 | 1.00 | 1.00 | 1.00 | 1.00 | 1.00 | 1.00 | 1.00 |
| AdjDel/Veh: | 0.0 | 0.0 | 0.0 | 12.9 | 0.0 | 12.9 | 12.9 | 12.9 | 0.0 | 0.0 | 12.5 | 10.6 |
| LOS by Move: | * | * | * | B | * | B | B | B | * | * | B | B |
| ApproachDel: | xxxxxx | | | 12.9 | | | 12.9 | | | 11.6 | | |
| Delay Adj: | xxxxx | | | 1.00 | | | 1.00 | | | 1.00 | | |
| ApprAdjDel: | xxxxxx | | | 12.9 | | | 12.9 | | | 11.6 | | |
| LOS by Appr: | * | | | B | | | B | | | B | | |
| AllWayAvgQ: | 0.0 | 0.0 | 0.0 | 0.7 | 0.7 | 0.7 | 0.8 | 0.8 | 0.8 | 0.0 | 0.7 | 0.6 |

Note: Queue reported is the number of cars per lane.

Valle Verde Home Project
Existing+Ambient+Project (Proposed Project)
PM Peak Hour

Level Of Service Computation Report
2000 HCM Operations Method (Future Volume Alternative)

Intersection #9 Las Palmas/S La Cumbre Rd at US-101 SB Ramps

Cycle (sec): 100 Critical Vol./Cap.(X): 0.602
Loss Time (sec): 10 (Y+R=4.0 sec) Average Delay (sec/veh): 27.5
Optimal Cycle: 44 Level Of Service: C

| Approach: | North Bound | | | South Bound | | | East Bound | | | West Bound | | |
|---|---|---|---|---|---|---|---|---|---|---|---|---|
| Movement: | L - T - R | | | L - T - R | | | L - T - R | | | L - T - R | | |
| Control: | Protected | | | Protected | | | Protected | | | Protected | | |
| Rights: | Include | | | Include | | | Include | | | Include | | |
| Min. Green: | 0 | 0 | 0 | 0 | 0 | 0 | 0 | 0 | 0 | 0 | 0 | 0 |
| Lanes: | 0 0 2 | 0 | 1 | 2 0 1 | 0 | 0 | 1 1 0 | 0 | 1 | 0 0 0 | 0 | 0 |
| Volume Module: | | | | | | | | | | | | |
| Base Vol: | 0 | 314 | 144 | 599 | 385 | 0 | 604 | 1 | 75 | 0 | 0 | 0 |
| Growth Adj: | 1.02 | 1.02 | 1.02 | 1.02 | 1.02 | 1.02 | 1.02 | 1.02 | 1.02 | 1.02 | 1.02 | 1.02 |
| Initial Bse: | 0 | 320 | 147 | 611 | 393 | 0 | 616 | 1 | 77 | 0 | 0 | 0 |
| Added Vol: | 0 | 3 | 0 | 0 | 0 | 0 | 0 | 0 | 2 | 0 | 0 | 0 |
| PasserByVol: | 0 | 0 | 0 | 0 | 0 | 0 | 0 | 0 | 0 | 0 | 0 | 0 |
| Initial Fut: | 0 | 323 | 147 | 611 | 393 | 0 | 616 | 1 | 79 | 0 | 0 | 0 |
| User Adj: | 1.00 | 1.00 | 1.00 | 1.00 | 1.00 | 1.00 | 1.00 | 1.00 | 1.00 | 1.00 | 1.00 | 1.00 |
| PHF Adj: | 1.00 | 1.00 | 1.00 | 1.00 | 1.00 | 1.00 | 1.00 | 1.00 | 1.00 | 1.00 | 1.00 | 1.00 |
| PHF Volume: | 0 | 323 | 147 | 611 | 393 | 0 | 616 | 1 | 79 | 0 | 0 | 0 |
| Reduct Vol: | 0 | 0 | 0 | 0 | 0 | 0 | 0 | 0 | 0 | 0 | 0 | 0 |
| Reduced Vol: | 0 | 323 | 147 | 611 | 393 | 0 | 616 | 1 | 79 | 0 | 0 | 0 |
| PCE Adj: | 1.00 | 1.00 | 1.00 | 1.00 | 1.00 | 1.00 | 1.00 | 1.00 | 1.00 | 1.00 | 1.00 | 1.00 |
| MLF Adj: | 1.00 | 1.00 | 1.00 | 1.00 | 1.00 | 1.00 | 1.00 | 1.00 | 1.00 | 1.00 | 1.00 | 1.00 |
| FinalVolume: | 0 | 323 | 147 | 611 | 393 | 0 | 616 | 1 | 79 | 0 | 0 | 0 |
| Saturation Flow Module: | | | | | | | | | | | | |
| Sat/Lane: | 1900 | 1900 | 1900 | 1900 | 1900 | 1900 | 1900 | 1900 | 1900 | 1900 | 1900 | 1900 |
| Adjustment: | 1.00 | 0.95 | 0.85 | 0.74 | 1.00 | 1.00 | 0.69 | 0.87 | 0.85 | 1.00 | 1.00 | 1.00 |
| Lanes: | 0.00 | 2.00 | 1.00 | 2.00 | 1.00 | 0.00 | 1.99 | 0.01 | 1.00 | 0.00 | 0.00 | 0.00 |
| Final Sat.: | 0 | 3610 | 1615 | 2801 | 1900 | 0 | 2632 | 4 | 1615 | 0 | 0 | 0 |
| Capacity Analysis Module: | | | | | | | | | | | | |
| Vol/Sat: | 0.00 | 0.09 | 0.09 | 0.22 | 0.21 | 0.00 | 0.23 | 0.23 | 0.05 | 0.00 | 0.00 | 0.00 |
| Crit Moves: | | **** | | **** | | | **** | | | | | |
| Green/Cycle: | 0.00 | 0.15 | 0.15 | 0.36 | 0.51 | 0.00 | 0.39 | 0.39 | 0.39 | 0.00 | 0.00 | 0.00 |
| Volume/Cap: | 0.00 | 0.60 | 0.61 | 0.60 | 0.40 | 0.00 | 0.60 | 0.60 | 0.12 | 0.00 | 0.00 | 0.00 |
| Delay/Veh: | 0.0 | 41.7 | 44.4 | 27.0 | 15.3 | 0.0 | 25.4 | 25.4 | 19.7 | 0.0 | 0.0 | 0.0 |
| User DelAdj: | 1.00 | 1.00 | 1.00 | 1.00 | 1.00 | 1.00 | 1.00 | 1.00 | 1.00 | 1.00 | 1.00 | 1.00 |
| AdjDel/Veh: | 0.0 | 41.7 | 44.4 | 27.0 | 15.3 | 0.0 | 25.4 | 25.4 | 19.7 | 0.0 | 0.0 | 0.0 |
| LOS by Move: | A | D | D | C | B | A | C | C | B | A | A | A |
| HCM2kAvgQ: | 0 | 6 | 5 | 9 | 7 | 0 | 8 | 10 | 2 | 0 | 0 | 0 |

Note: Queue reported is the number of cars per lane.

# CUMULATIVE PROJECT
# LOS WORKSHEETS

# WEEKDAY AM PEAK HOUR

Valle Verde Home Project
Existing+Ambient+Cumulative+Project (Proposed Project)
AM Peak Hour

Scenario Report

| | |
|---|---|
| Scenario: | E+A+C+P Alt1 AM |
| Command: | E+A+C+P Alt1 AM |
| Volume: | E+A+C+P AM |
| Geometry: | Existing |
| Impact Fee: | Default Impact Fee |
| Trip Generation: | AM Peak |
| Trip Distribution: | Trip Distribution |
| Paths: | Default Path |
| Routes: | Default Route |
| Configuration: | E+A+C+P Alt1 AM |

Valle Verde Home Project
Existing+Ambient+Cumulative+Project (Proposed Project)
AM Peak Hour

Trip Generation Report

Forecast for AM Peak

| Zone # | Subzone | Amount | Units | Rate In | Rate Out | Trips In | Trips Out | Total Trips | % Of Total |
|---|---|---|---|---|---|---|---|---|---|
| 1 | 1235 Veronic | 1.00 | Residential | 9.00 | 46.00 | 9 | 46 | 55 | 13.1 |
| | Zone 1 Subtotal | | | | | 9 | 46 | 55 | 13.1 |
| 5 | 3820 State S | 1.00 | Office | 98.00 | 13.00 | 98 | 13 | 111 | 26.5 |
| | Zone 5 Subtotal | | | | | 98 | 13 | 111 | 26.5 |
| 6 | 900-1100 Las | 1.00 | Residential | 6.00 | 15.00 | 6 | 15 | 21 | 5.0 |
| | Zone 6 Subtotal | | | | | 6 | 15 | 21 | 5.0 |
| 12 | 215 Pesetas | 1.00 | Medical | 24.00 | 17.00 | 24 | 17 | 41 | 9.8 |
| | Zone 12 Subtotal | | | | | 24 | 17 | 41 | 9.8 |
| 13 | Elings Park | 1.00 | Park | 65.00 | 4.00 | 65 | 4 | 69 | 16.5 |
| | Zone 13 Subtotal | | | | | 65 | 4 | 69 | 16.5 |
| 14 | Cancer Cente | 1.00 | Medical Office | 89.00 | 25.00 | 89 | 25 | 114 | 27.2 |
| | Zone 14 Subtotal | | | | | 89 | 25 | 114 | 27.2 |
| 101 | Project (Val | 1.00 | Residential | 4.00 | 4.00 | 4 | 4 | 8 | 1.9 |
| | Zone 101 Subtotal | | | | | 4 | 4 | 8 | 1.9 |
| TOTAL | | | | | | 295 | 124 | 419 | 100.0 |

Valle Verde Home Project
Existing+Ambient+Cumulative+Project (Proposed Project)
AM Peak Hour

Trip Distribution Report

Percent Of Trips Distribution

| | To Gates | | | | | | | | | | |
|---|---|---|---|---|---|---|---|---|---|---|---|
| Zone | 1 | 2 | 3 | 4 | 5 | 6 | 7 | 8 | 9 | 10 | 11 |
| 1 | 10.0 | 5.0 | 30.0 | 30.0 | 5.0 | 5.0 | 0.0 | 15.0 | 0.0 | 0.0 | 0.0 |
| 5 | 0.0 | 0.0 | 40.0 | 30.0 | 0.0 | 0.0 | 2.5 | 2.5 | 5.0 | 15.0 | 5.0 |
| 6 | 10.0 | 5.0 | 30.0 | 30.0 | 5.0 | 5.0 | 0.0 | 15.0 | 0.0 | 0.0 | 0.0 |
| 12 | 0.0 | 0.0 | 40.0 | 30.0 | 0.0 | 0.0 | 2.5 | 2.5 | 5.0 | 15.0 | 5.0 |
| 13 | 10.0 | 5.0 | 30.0 | 30.0 | 5.0 | 5.0 | 5.0 | 10.0 | 0.0 | 0.0 | 0.0 |
| 14 | 0.0 | 10.0 | 35.0 | 25.0 | 0.0 | 0.0 | 3.0 | 2.0 | 10.0 | 15.0 | 0.0 |
| 101 | 5.0 | 5.0 | 40.0 | 30.0 | 5.0 | 0.0 | 0.0 | 10.0 | 0.0 | 5.0 | 0.0 |

Valle Verde Home Project
Existing+Ambient+Cumulative+Project (Proposed Project)
AM Peak Hour

Turning Movement Report
AM Peak

| Volume | Northbound | | | Southbound | | | Eastbound | | | Westbound | | | Total |
|---|---|---|---|---|---|---|---|---|---|---|---|---|---|
| Type | Left | Thru | Right | Left | Thru | Right | Left | Thru | Right | Left | Thru | Right | Volume |
| #6 Calle de los Amigos at Modoc Rd | | | | | | | | | | | | | |
| Base | 98 | 0 | 46 | 0 | 0 | 0 | 0 | 198 | 53 | 19 | 312 | 0 | 726 |
| Added | 18 | 0 | 1 | 0 | 0 | 0 | 0 | 7 | 2 | 1 | 3 | 0 | 32 |
| Total | 116 | 0 | 47 | 0 | 0 | 0 | 0 | 205 | 55 | 20 | 315 | 0 | 758 |
| #7 Via Senda at Modoc Rd | | | | | | | | | | | | | |
| Base | 38 | 0 | 139 | 0 | 0 | 0 | 0 | 118 | 96 | 179 | 134 | 0 | 703 |
| Added | 0 | 0 | 5 | 0 | 0 | 0 | 0 | 4 | 0 | 18 | 3 | 0 | 30 |
| Total | 38 | 0 | 144 | 0 | 0 | 0 | 0 | 122 | 96 | 197 | 137 | 0 | 733 |
| #8 Via Senda at Las Palmas Dr | | | | | | | | | | | | | |
| Base | 0 | 0 | 0 | 242 | 0 | 35 | 27 | 289 | 0 | 0 | 344 | 149 | 1084 |
| Added | 0 | 0 | 0 | 18 | 0 | 0 | 0 | 6 | 0 | 0 | 2 | 5 | 31 |
| Total | 0 | 0 | 0 | 260 | 0 | 35 | 27 | 295 | 0 | 0 | 346 | 154 | 1115 |
| #9 Las Palmas/S La Cumbre Rd at US-101 SB Ramps | | | | | | | | | | | | | |
| Base | 0 | 430 | 244 | 458 | 393 | 0 | 467 | 5 | 112 | 0 | 0 | 0 | 2109 |
| Added | 0 | 24 | 0 | 0 | 2 | 0 | 0 | 0 | 4 | 0 | 0 | 0 | 30 |
| PassBy | 0 | 4 | 0 | 3 | 1 | 0 | 0 | 0 | 0 | 0 | 0 | 0 | 8 |
| Total | 0 | 458 | 244 | 461 | 396 | 0 | 467 | 5 | 116 | 0 | 0 | 0 | 2147 |

Valle Verde Home Project
Existing+Ambient+Cumulative+Project (Proposed Project)
AM Peak Hour

Impact Analysis Report
Level Of Service

| Intersection | Base LOS | Base Del/ Veh | Base V/ C | Future LOS | Future Del/ Veh | Future V/ C | Change in |
|---|---|---|---|---|---|---|---|
| # 6 Calle de los Amigos at Modoc R | B | 12.9 | 0.000 | B | 13.6 | 0.000 | + 0.668 D/V |
| # 7 Via Senda at Modoc Rd | A | 9.7 | 0.415 | B | 10.0 | 0.445 | + 0.030 V/C |
| # 8 Via Senda at Las Palmas Dr | B | 13.2 | 0.554 | B | 13.7 | 0.565 | + 0.011 V/C |
| # 9 Las Palmas/S La Cumbre Rd at | B | xxxxx | 0.616 | B | xxxxx | 0.617 | + 0.001 V/C |

Traffix 7.9.0215 (c) 2008 Dowling Assoc. Licensed to MMA, LONG BEACH, CA

Valle Verde Home Project
Existing+Ambient+Cumulative+Project (Proposed Project)
AM Peak Hour

Level Of Service Computation Report
2000 HCM Unsignalized Method (Future Volume Alternative)

Intersection #6 Calle de los Amigos at Modoc Rd

Average Delay (sec/veh): 3.1  Worst Case Level Of Service: B[ 13.6]

| Street Name: | Calle de los Amigos | | | | | | | | | Modoc Rd | | |
|---|---|---|---|---|---|---|---|---|---|---|---|---|
| Approach: | North Bound | | | South Bound | | | East Bound | | | West Bound | | |
| Movement: | L - | T - | R | L - | T - | R | L - | T - | R | L - | T - | R |
| Control: | Stop Sign | | | Stop Sign | | | Uncontrolled | | | Uncontrolled | | |
| Rights: | Include | | | Include | | | Include | | | Include | | |
| Lanes: | 1 0 0 0 1 | | | 0 0 0 0 0 | | | 0 0 0 1 0 | | | 1 0 1 0 0 | | |
| Volume Module: | | | | | | | | | | | | |
| Base Vol: | 96 | 0 | 45 | 0 | 0 | 0 | 0 | 194 | 52 | 19 | 306 | 0 |
| Growth Adj: | 1.02 | 1.02 | 1.02 | 1.02 | 1.02 | 1.02 | 1.02 | 1.02 | 1.02 | 1.02 | 1.02 | 1.02 |
| Initial Bse: | 98 | 0 | 46 | 0 | 0 | 0 | 0 | 198 | 53 | 19 | 312 | 0 |
| Added Vol: | 18 | 0 | 1 | 0 | 0 | 0 | 0 | 7 | 2 | 1 | 3 | 0 |
| PasserByVol: | 0 | 0 | 0 | 0 | 0 | 0 | 0 | 0 | 0 | 0 | 0 | 0 |
| Initial Fut: | 116 | 0 | 47 | 0 | 0 | 0 | 0 | 205 | 55 | 20 | 315 | 0 |
| User Adj: | 1.00 | 1.00 | 1.00 | 1.00 | 1.00 | 1.00 | 1.00 | 1.00 | 1.00 | 1.00 | 1.00 | 1.00 |
| PHF Adj: | 1.00 | 1.00 | 1.00 | 1.00 | 1.00 | 1.00 | 1.00 | 1.00 | 1.00 | 1.00 | 1.00 | 1.00 |
| PHF Volume: | 116 | 0 | 47 | 0 | 0 | 0 | 0 | 205 | 55 | 20 | 315 | 0 |
| Reduct Vol: | 0 | 0 | 0 | 0 | 0 | 0 | 0 | 0 | 0 | 0 | 0 | 0 |
| FinalVolume: | 116 | 0 | 47 | 0 | 0 | 0 | 0 | 205 | 55 | 20 | 315 | 0 |
| Critical Gap Module: | | | | | | | | | | | | |
| Critical Gp: | 6.4 | xxxx | 6.2 | xxxxx | xxxx | xxxxx | xxxxx | xxxx | xxxxx | 4.1 | xxxx | xxxxx |
| FollowUpTim: | 3.5 | xxxx | 3.3 | xxxxx | xxxx | xxxxx | xxxxx | xxxx | xxxxx | 2.2 | xxxx | xxxxx |
| Capacity Module: | | | | | | | | | | | | |
| Cnflict Vol: | 588 | xxxx | 232 | xxxx | xxxx | xxxxx | xxxx | xxxx | xxxxx | 260 | xxxx | xxxxx |
| Potent Cap.: | 475 | xxxx | 812 | xxxx | xxxx | xxxxx | xxxx | xxxx | xxxxx | 1316 | xxxx | xxxxx |
| Move Cap.: | 469 | xxxx | 812 | xxxx | xxxx | xxxxx | xxxx | xxxx | xxxxx | 1316 | xxxx | xxxxx |
| Volume/Cap: | 0.25 | xxxx | 0.06 | xxxx | xxxx | xxxx | xxxx | xxxx | xxxx | 0.02 | xxxx | xxxx |
| Level Of Service Module: | | | | | | | | | | | | |
| 2Way95thQ: | 1.0 | xxxx | 0.2 | xxxx | xxxx | xxxxx | xxxx | xxxx | xxxxx | 0.0 | xxxx | xxxxx |
| Control Del: | 15.2 | xxxx | 9.7 | xxxxx | xxxx | xxxxx | xxxxx | xxxx | xxxxx | 7.8 | xxxx | xxxxx |
| LOS by Move: | C | * | A | * | * | * | * | * | * | A | * | * |
| Movement: | LT - | LTR - | RT | LT - | LTR - | RT | LT - | LTR - | RT | LT - | LTR - | RT |
| Shared Cap.: | xxxx | xxxx | xxxxx | xxxx | xxxx | xxxxx | xxxx | xxxx | xxxxx | xxxx | xxxx | xxxxx |
| SharedQueue: | xxxxx | xxxx | xxxxx | xxxxx | xxxx | xxxxx | xxxxx | xxxx | xxxxx | xxxxx | xxxx | xxxxx |
| Shrd ConDel: | xxxxx | xxxx | xxxxx | xxxxx | xxxx | xxxxx | xxxxx | xxxx | xxxxx | xxxxx | xxxx | xxxxx |
| Shared LOS: | * | * | * | * | * | * | * | * | * | * | * | * |
| ApproachDel: | 13.6 | | | xxxxxx | | | xxxxxx | | | xxxxxx | | |
| ApproachLOS: | B | | | * | | | * | | | * | | |

Note: Queue reported is the number of cars per lane.

Valle Verde Home Project
Existing+Ambient+Cumulative+Project (Proposed Project)
AM Peak Hour

Level Of Service Computation Report
2000 HCM 4-Way Stop Method (Future Volume Alternative)

Intersection #7 Via Senda at Modoc Rd

Cycle (sec): 100 | Critical Vol./Cap.(X): 0.445
Loss Time (sec): 0 (Y+R=4.0 sec) | Average Delay (sec/veh): 10.0
Optimal Cycle: 0 | Level Of Service: B

| Street Name: | Via Senda | | | | | | Modoc Rd | | | | | |
|---|---|---|---|---|---|---|---|---|---|---|---|---|
| Approach: | North Bound | | | South Bound | | | East Bound | | | West Bound | | |
| Movement: | L - | T - | R | L - | T - | R | L - | T - | R | L - | T - | R |
| Control: | Stop Sign | | | Stop Sign | | | Stop Sign | | | Stop Sign | | |
| Rights: | Include | | | Include | | | Include | | | Include | | |
| Min. Green: | 0 | 0 | 0 | 0 | 0 | 0 | 0 | 0 | 0 | 0 | 0 | 0 |
| Lanes: | 0 0 | 1! 0 | 0 | 0 0 | 0 0 | 0 | 0 0 | 0 1 | 0 | 0 1 | 0 0 | 0 |
| Volume Module: | | | | | | | | | | | | |
| Base Vol: | 37 | 0 | 136 | 0 | 0 | 0 | 0 | 116 | 94 | 175 | 131 | 0 |
| Growth Adj: | 1.02 | 1.02 | 1.02 | 1.02 | 1.02 | 1.02 | 1.02 | 1.02 | 1.02 | 1.02 | 1.02 | 1.02 |
| Initial Bse: | 38 | 0 | 139 | 0 | 0 | 0 | 0 | 118 | 96 | 179 | 134 | 0 |
| Added Vol: | 0 | 0 | 5 | 0 | 0 | 0 | 0 | 4 | 0 | 18 | 3 | 0 |
| PasserByVol: | 0 | 0 | 0 | 0 | 0 | 0 | 0 | 0 | 0 | 0 | 0 | 0 |
| Initial Fut: | 38 | 0 | 144 | 0 | 0 | 0 | 0 | 122 | 96 | 197 | 137 | 0 |
| User Adj: | 1.00 | 1.00 | 1.00 | 1.00 | 1.00 | 1.00 | 1.00 | 1.00 | 1.00 | 1.00 | 1.00 | 1.00 |
| PHF Adj: | 1.00 | 1.00 | 1.00 | 1.00 | 1.00 | 1.00 | 1.00 | 1.00 | 1.00 | 1.00 | 1.00 | 1.00 |
| PHF Volume: | 38 | 0 | 144 | 0 | 0 | 0 | 0 | 122 | 96 | 197 | 137 | 0 |
| Reduct Vol: | 0 | 0 | 0 | 0 | 0 | 0 | 0 | 0 | 0 | 0 | 0 | 0 |
| Reduced Vol: | 38 | 0 | 144 | 0 | 0 | 0 | 0 | 122 | 96 | 197 | 137 | 0 |
| PCE Adj: | 1.00 | 1.00 | 1.00 | 1.00 | 1.00 | 1.00 | 1.00 | 1.00 | 1.00 | 1.00 | 1.00 | 1.00 |
| MLF Adj: | 1.00 | 1.00 | 1.00 | 1.00 | 1.00 | 1.00 | 1.00 | 1.00 | 1.00 | 1.00 | 1.00 | 1.00 |
| FinalVolume: | 38 | 0 | 144 | 0 | 0 | 0 | 0 | 122 | 96 | 197 | 137 | 0 |
| Saturation Flow Module: | | | | | | | | | | | | |
| Adjustment: | 1.00 | 1.00 | 1.00 | 1.00 | 1.00 | 1.00 | 1.00 | 1.00 | 1.00 | 1.00 | 1.00 | 1.00 |
| Lanes: | 0.20 | 0.01 | 0.79 | 0.00 | 0.00 | 0.00 | 0.00 | 0.56 | 0.44 | 0.59 | 0.41 | 0.00 |
| Final Sat.: | 149 | 0 | 568 | 0 | 0 | 0 | 0 | 437 | 342 | 441 | 307 | 0 |
| Capacity Analysis Module: | | | | | | | | | | | | |
| Vol/Sat: | 0.25 | 0.00 | 0.25 | xxxx | xxxx | xxxx | xxxx | 0.28 | 0.28 | 0.45 | 0.45 | xxxx |
| Crit Moves: | | | **** | | | | | **** | | | **** | |
| Delay/Veh: | 9.1 | 9.1 | 9.1 | 0.0 | 0.0 | 0.0 | 0.0 | 9.1 | 9.1 | 11.2 | 11.2 | 0.0 |
| Delay Adj: | 1.00 | 1.00 | 1.00 | 1.00 | 1.00 | 1.00 | 1.00 | 1.00 | 1.00 | 1.00 | 1.00 | 1.00 |
| AdjDel/Veh: | 9.1 | 9.1 | 9.1 | 0.0 | 0.0 | 0.0 | 0.0 | 9.1 | 9.1 | 11.2 | 11.2 | 0.0 |
| LOS by Move: | A | A | A | * | * | * | * | A | A | B | B | * |
| ApproachDel: | 9.1 | | | xxxxxx | | | | 9.1 | | | 11.2 | |
| Delay Adj: | 1.00 | | | xxxxx | | | | 1.00 | | | 1.00 | |
| ApprAdjDel: | 9.1 | | | xxxxxx | | | | 9.1 | | | 11.2 | |
| LOS by Appr: | A | | | * | | | | A | | | B | |
| AllWayAvgQ: | 0.3 | 0.3 | 0.3 | 0.0 | 0.0 | 0.0 | 0.4 | 0.4 | 0.4 | 0.7 | 0.7 | 0.7 |

Note: Queue reported is the number of cars per lane.

Valle Verde Home Project
Existing+Ambient+Cumulative+Project (Proposed Project)
AM Peak Hour

Level Of Service Computation Report
2000 HCM 4-Way Stop Method (Future Volume Alternative)

Intersection #8 Via Senda at Las Palmas Dr

Cycle (sec): 100 | Critical Vol./Cap.(X): 0.565
Loss Time (sec): 0 (Y+R=4.0 sec) | Average Delay (sec/veh): 13.7
Optimal Cycle: 0 | Level Of Service: B

| Street Name: | Via Senda | | | | | | Las Palmas Dr | | | | | |
|---|---|---|---|---|---|---|---|---|---|---|---|---|
| Approach: | North Bound | | | South Bound | | | East Bound | | | West Bound | | |
| Movement: | L - | T - | R | L - | T - | R | L - | T - | R | L - | T - | R |
| Control: | Stop Sign | | | Stop Sign | | | Stop Sign | | | Stop Sign | | |
| Rights: | Include | | | Include | | | Include | | | Include | | |
| Min. Green: | 0 | 0 | 0 | 0 | 0 | 0 | 0 | 0 | 0 | 0 | 0 | 0 |
| Lanes: | 0 0 | 0 0 | 0 | 0 0 | 1! 0 | 0 | 0 1 | 0 0 | 0 | 0 0 | 1 0 | 1 |
| Volume Module: | | | | | | | | | | | | |
| Base Vol: | 0 | 0 | 0 | 237 | 0 | 34 | 26 | 283 | 0 | 0 | 337 | 146 |
| Growth Adj: | 1.02 | 1.02 | 1.02 | 1.02 | 1.02 | 1.02 | 1.02 | 1.02 | 1.02 | 1.02 | 1.02 | 1.02 |
| Initial Bse: | 0 | 0 | 0 | 242 | 0 | 35 | 27 | 289 | 0 | 0 | 344 | 149 |
| Added Vol: | 0 | 0 | 0 | 18 | 0 | 0 | 0 | 6 | 0 | 0 | 2 | 5 |
| PasserByVol: | 0 | 0 | 0 | 0 | 0 | 0 | 0 | 0 | 0 | 0 | 0 | 0 |
| Initial Fut: | 0 | 0 | 0 | 260 | 0 | 35 | 27 | 295 | 0 | 0 | 346 | 154 |
| User Adj: | 1.00 | 1.00 | 1.00 | 1.00 | 1.00 | 1.00 | 1.00 | 1.00 | 1.00 | 1.00 | 1.00 | 1.00 |
| PHF Adj: | 1.00 | 1.00 | 1.00 | 1.00 | 1.00 | 1.00 | 1.00 | 1.00 | 1.00 | 1.00 | 1.00 | 1.00 |
| PHF Volume: | 0 | 0 | 0 | 260 | 0 | 35 | 27 | 295 | 0 | 0 | 346 | 154 |
| Reduct Vol: | 0 | 0 | 0 | 0 | 0 | 0 | 0 | 0 | 0 | 0 | 0 | 0 |
| Reduced Vol: | 0 | 0 | 0 | 260 | 0 | 35 | 27 | 295 | 0 | 0 | 346 | 154 |
| PCE Adj: | 1.00 | 1.00 | 1.00 | 1.00 | 1.00 | 1.00 | 1.00 | 1.00 | 1.00 | 1.00 | 1.00 | 1.00 |
| MLF Adj: | 1.00 | 1.00 | 1.00 | 1.00 | 1.00 | 1.00 | 1.00 | 1.00 | 1.00 | 1.00 | 1.00 | 1.00 |
| FinalVolume: | 0 | 0 | 0 | 260 | 0 | 35 | 27 | 295 | 0 | 0 | 346 | 154 |
| Saturation Flow Module: | | | | | | | | | | | | |
| Adjustment: | 1.00 | 1.00 | 1.00 | 1.00 | 1.00 | 1.00 | 1.00 | 1.00 | 1.00 | 1.00 | 1.00 | 1.00 |
| Lanes: | 0.00 | 0.00 | 0.00 | 0.88 | 0.01 | 0.11 | 0.08 | 0.92 | 0.00 | 0.00 | 1.00 | 1.00 |
| Final Sat.: | 0 | 0 | 0 | 520 | 0 | 69 | 52 | 582 | 0 | 0 | 612 | 694 |
| Capacity Analysis Module: | | | | | | | | | | | | |
| Vol/Sat: | xxxx | xxxx | xxxx | 0.50 | 0.00 | 0.50 | 0.51 | 0.51 | xxxx | xxxx | 0.57 | 0.22 |
| Crit Moves: | | | | **** | | | | **** | | | **** | |
| Delay/Veh: | 0.0 | 0.0 | 0.0 | 14.0 | 14.0 | 14.0 | 13.7 | 13.7 | 0.0 | 0.0 | 15.4 | 9.2 |
| Delay Adj: | 1.00 | 1.00 | 1.00 | 1.00 | 1.00 | 1.00 | 1.00 | 1.00 | 1.00 | 1.00 | 1.00 | 1.00 |
| AdjDel/Veh: | 0.0 | 0.0 | 0.0 | 14.0 | 14.0 | 14.0 | 13.7 | 13.7 | 0.0 | 0.0 | 15.4 | 9.2 |
| LOS by Move: | * | * | * | B | B | B | B | B | * | * | C | A |
| ApproachDel: | xxxxxx | | | 14.0 | | | 13.7 | | | 13.4 | | |
| Delay Adj: | xxxxx | | | 1.00 | | | 1.00 | | | 1.00 | | |
| ApprAdjDel: | xxxxxx | | | 14.0 | | | 13.7 | | | 13.4 | | |
| LOS by Appr: | * | | | B | | | B | | | B | | |
| AllWayAvgQ: | 0.0 | 0.0 | 0.0 | 0.8 | 0.8 | 0.8 | 0.9 | 0.9 | 0.9 | 0.0 | 1.2 | 0.3 |

Note: Queue reported is the number of cars per lane.

Traffix 7.9.0215 (c) 2008 Dowling Assoc. Licensed to MMA, LONG BEACH, CA

Valle Verde Home Project
Existing+Ambient+Cumulative+Project (Proposed Project)
AM Peak Hour

Level Of Service Computation Report
ICU 1(Loss as Cycle Length %) Method (Future Volume Alternative)

Intersection #9 Las Palmas/S La Cumbre Rd at US-101 SB Ramps

| | | | |
|---|---|---|---|
| Cycle (sec): | 100 | Critical Vol./Cap.(X): | 0.617 |
| Loss Time (sec): | 10 (Y+R=4.0 sec) | Average Delay (sec/veh): | xxxxxx |
| Optimal Cycle: | 41 | Level Of Service: | B |

| Approach: | North Bound | | | South Bound | | | East Bound | | | West Bound | | |
|---|---|---|---|---|---|---|---|---|---|---|---|---|
| Movement: | L - | T - | R | L - | T - | R | L - | T - | R | L - | T - | R |
| Control: | Protected | | | Protected | | | Protected | | | Protected | | |
| Rights: | Include | | | Include | | | Include | | | Include | | |
| Min. Green: | 0 | 0 | 0 | 0 | 0 | 0 | 0 | 0 | 0 | 0 | 0 | 0 |
| Lanes: | 0 0 | 2 0 | 1 | 2 0 | 1 0 | 0 | 1 1 | 0 0 | 1 | 0 0 | 0 0 | 0 |
| Volume Module: | | | | | | | | | | | | |
| Base Vol: | 0 | 422 | 239 | 449 | 385 | 0 | 458 | 5 | 110 | 0 | 0 | 0 |
| Growth Adj: | 1.02 | 1.02 | 1.02 | 1.02 | 1.02 | 1.02 | 1.02 | 1.02 | 1.02 | 1.02 | 1.02 | 1.02 |
| Initial Bse: | 0 | 430 | 244 | 458 | 393 | 0 | 467 | 5 | 112 | 0 | 0 | 0 |
| Added Vol: | 0 | 24 | 0 | 0 | 2 | 0 | 0 | 0 | 4 | 0 | 0 | 0 |
| PasserByVol: | 0 | 4 | 0 | 3 | 1 | 0 | 0 | 0 | 0 | 0 | 0 | 0 |
| Initial Fut: | 0 | 458 | 244 | 461 | 396 | 0 | 467 | 5 | 116 | 0 | 0 | 0 |
| User Adj: | 1.00 | 1.00 | 1.00 | 1.00 | 1.00 | 1.00 | 1.00 | 1.00 | 1.00 | 1.00 | 1.00 | 1.00 |
| PHF Adj: | 1.00 | 1.00 | 1.00 | 1.00 | 1.00 | 1.00 | 1.00 | 1.00 | 1.00 | 1.00 | 1.00 | 1.00 |
| PHF Volume: | 0 | 458 | 244 | 461 | 396 | 0 | 467 | 5 | 116 | 0 | 0 | 0 |
| Reduct Vol: | 0 | 0 | 0 | 0 | 0 | 0 | 0 | 0 | 0 | 0 | 0 | 0 |
| Reduced Vol: | 0 | 458 | 244 | 461 | 396 | 0 | 467 | 5 | 116 | 0 | 0 | 0 |
| PCE Adj: | 1.00 | 1.00 | 1.00 | 1.00 | 1.00 | 1.00 | 1.00 | 1.00 | 1.00 | 1.00 | 1.00 | 1.00 |
| MLF Adj: | 1.00 | 1.00 | 1.00 | 1.00 | 1.00 | 1.00 | 1.00 | 1.00 | 1.00 | 1.00 | 1.00 | 1.00 |
| FinalVolume: | 0 | 458 | 244 | 461 | 396 | 0 | 467 | 5 | 116 | 0 | 0 | 0 |
| Saturation Flow Module: | | | | | | | | | | | | |
| Sat/Lane: | 1600 | 1600 | 1600 | 1600 | 1600 | 1600 | 1600 | 1600 | 1600 | 1600 | 1600 | 1600 |
| Adjustment: | 1.00 | 1.00 | 1.00 | 0.80 | 1.00 | 1.00 | 0.80 | 1.00 | 1.00 | 1.00 | 1.00 | 1.00 |
| Lanes: | 0.00 | 2.00 | 1.00 | 2.00 | 1.00 | 0.00 | 1.98 | 0.02 | 1.00 | 0.00 | 0.00 | 0.00 |
| Final Sat.: | 0 | 3200 | 1600 | 2560 | 1600 | 0 | 2532 | 35 | 1600 | 0 | 0 | 0 |
| Capacity Analysis Module: | | | | | | | | | | | | |
| Vol/Sat: | 0.00 | 0.14 | 0.15 | 0.18 | 0.25 | 0.00 | 0.18 | 0.15 | 0.07 | 0.00 | 0.00 | 0.00 |
| Crit Moves: | | | **** | **** | | | **** | | | | | |

Valle Verde Home Project
Existing+Ambient+Cumulative+Project (Proposed Project)
AM Peak Hour

Scenario Report

| | |
|---|---|
| Scenario: | E+A+C+P Alt1 AM |
| Command: | E+A+C+P Alt1 AM |
| Volume: | E+A+C+P AM |
| Geometry: | Existing |
| Impact Fee: | Default Impact Fee |
| Trip Generation: | AM Peak |
| Trip Distribution: | Trip Distribution |
| Paths: | Default Path |
| Routes: | Default Route |
| Configuration: | E+A+C+P Alt1 AM |

Valle Verde Home Project
Existing+Ambient+Cumulative+Project (Proposed Project)
AM Peak Hour

Trip Generation Report

Forecast for AM Peak

| Zone # | Subzone | Amount | Units | Rate In | Rate Out | Trips In | Trips Out | Total Trips | % Of Total |
|---|---|---|---|---|---|---|---|---|---|
| 1 | 1235 Veronic | 1.00 | Residential | 9.00 | 46.00 | 9 | 46 | 55 | 13.1 |
| | Zone 1 Subtotal | | | | | 9 | 46 | 55 | 13.1 |
| 5 | 3820 State S | 1.00 | Office | 98.00 | 13.00 | 98 | 13 | 111 | 26.5 |
| | Zone 5 Subtotal | | | | | 98 | 13 | 111 | 26.5 |
| 6 | 900-1100 Las | 1.00 | Residential | 6.00 | 15.00 | 6 | 15 | 21 | 5.0 |
| | Zone 6 Subtotal | | | | | 6 | 15 | 21 | 5.0 |
| 12 | 215 Pesetas | 1.00 | Medical | 24.00 | 17.00 | 24 | 17 | 41 | 9.8 |
| | Zone 12 Subtotal | | | | | 24 | 17 | 41 | 9.8 |
| 13 | Elings Park | 1.00 | Park | 65.00 | 4.00 | 65 | 4 | 69 | 16.5 |
| | Zone 13 Subtotal | | | | | 65 | 4 | 69 | 16.5 |
| 14 | Cancer Cente | 1.00 | Medical Office | 89.00 | 25.00 | 89 | 25 | 114 | 27.2 |
| | Zone 14 Subtotal | | | | | 89 | 25 | 114 | 27.2 |
| 101 | Project (Val | 1.00 | Residential | 4.00 | 4.00 | 4 | 4 | 8 | 1.9 |
| | Zone 101 Subtotal | | | | | 4 | 4 | 8 | 1.9 |
| TOTAL | | | | | | 295 | 124 | 419 | 100.0 |

Valle Verde Home Project
Existing+Ambient+Cumulative+Project (Proposed Project)
AM Peak Hour

Trip Distribution Report

Percent Of Trips Distribution

| | To Gates | | | | | | | | | | |
|---|---|---|---|---|---|---|---|---|---|---|---|
| Zone | 1 | 2 | 3 | 4 | 5 | 6 | 7 | 8 | 9 | 10 | 11 |
| 1 | 10.0 | 5.0 | 30.0 | 30.0 | 5.0 | 5.0 | 0.0 | 15.0 | 0.0 | 0.0 | 0.0 |
| 5 | 0.0 | 0.0 | 40.0 | 30.0 | 0.0 | 0.0 | 2.5 | 2.5 | 5.0 | 15.0 | 5.0 |
| 6 | 10.0 | 5.0 | 30.0 | 30.0 | 5.0 | 5.0 | 0.0 | 15.0 | 0.0 | 0.0 | 0.0 |
| 12 | 0.0 | 0.0 | 40.0 | 30.0 | 0.0 | 0.0 | 2.5 | 2.5 | 5.0 | 15.0 | 5.0 |
| 13 | 10.0 | 5.0 | 30.0 | 30.0 | 5.0 | 5.0 | 5.0 | 10.0 | 0.0 | 0.0 | 0.0 |
| 14 | 0.0 | 10.0 | 35.0 | 25.0 | 0.0 | 0.0 | 3.0 | 2.0 | 10.0 | 15.0 | 0.0 |
| 101 | 5.0 | 5.0 | 40.0 | 30.0 | 5.0 | 0.0 | 0.0 | 10.0 | 0.0 | 5.0 | 0.0 |

Valle Verde Home Project
Existing+Ambient+Cumulative+Project (Proposed Project)
AM Peak Hour

Turning Movement Report
AM Peak

| Volume | Northbound | | | Southbound | | | Eastbound | | | Westbound | | | Total |
|---|---|---|---|---|---|---|---|---|---|---|---|---|---|
| Type | Left | Thru | Right | Left | Thru | Right | Left | Thru | Right | Left | Thru | Right | Volume |
| #6 Calle de los Amigos at Modoc Rd | | | | | | | | | | | | | |
| Base | 98 | 0 | 46 | 0 | 0 | 0 | 0 | 198 | 53 | 19 | 312 | 0 | 726 |
| Added | 18 | 0 | 1 | 0 | 0 | 0 | 0 | 7 | 2 | 1 | 3 | 0 | 32 |
| Total | 116 | 0 | 47 | 0 | 0 | 0 | 0 | 205 | 55 | 20 | 315 | 0 | 758 |
| #7 Via Senda at Modoc Rd | | | | | | | | | | | | | |
| Base | 38 | 0 | 139 | 0 | 0 | 0 | 0 | 118 | 96 | 179 | 134 | 0 | 703 |
| Added | 0 | 0 | 5 | 0 | 0 | 0 | 0 | 4 | 0 | 18 | 3 | 0 | 30 |
| Total | 38 | 0 | 144 | 0 | 0 | 0 | 0 | 122 | 96 | 197 | 137 | 0 | 733 |
| #8 Via Senda at Las Palmas Dr | | | | | | | | | | | | | |
| Base | 0 | 0 | 0 | 242 | 0 | 35 | 27 | 289 | 0 | 0 | 344 | 149 | 1084 |
| Added | 0 | 0 | 0 | 18 | 0 | 0 | 0 | 6 | 0 | 0 | 2 | 5 | 31 |
| Total | 0 | 0 | 0 | 260 | 0 | 35 | 27 | 295 | 0 | 0 | 346 | 154 | 1115 |
| #9 Las Palmas/S La Cumbre Rd at US-101 SB Ramps | | | | | | | | | | | | | |
| Base | 0 | 430 | 244 | 458 | 393 | 0 | 467 | 5 | 112 | 0 | 0 | 0 | 2109 |
| Added | 0 | 24 | 0 | 0 | 2 | 0 | 0 | 0 | 4 | 0 | 0 | 0 | 30 |
| PassBy | 0 | 4 | 0 | 3 | 1 | 0 | 0 | 0 | 0 | 0 | 0 | 0 | 8 |
| Total | 0 | 458 | 244 | 461 | 396 | 0 | 467 | 5 | 116 | 0 | 0 | 0 | 2147 |

Valle Verde Home Project
Existing+Ambient+Cumulative+Project (Proposed Project)
AM Peak Hour

Impact Analysis Report
Level Of Service

| Intersection | Base LOS | Base Del/ Veh | Base V/ C | Future LOS | Future Del/ Veh | Future V/ C | Change in |
|---|---|---|---|---|---|---|---|
| # 6 Calle de los Amigos at Modoc R | B | 12.9 | 0.000 | B | 13.6 | 0.000 | + 0.668 D/V |
| # 7 Via Senda at Modoc Rd | A | 9.7 | 0.415 | B | 10.0 | 0.445 | + 0.030 V/C |
| # 8 Via Senda at Las Palmas Dr | B | 13.2 | 0.554 | B | 13.7 | 0.565 | + 0.011 V/C |
| # 9 Las Palmas/S La Cumbre Rd at | C | 26.2 | 0.545 | C | 26.3 | 0.546 | + 0.114 D/V |

Traffix 7.9.0215 (c) 2008 Dowling Assoc. Licensed to MMA, LONG BEACH, CA

Valle Verde Home Project
Existing+Ambient+Cumulative+Project (Proposed Project)
AM Peak Hour

Level Of Service Computation Report
2000 HCM Unsignalized Method (Future Volume Alternative)

Intersection #6 Calle de los Amigos at Modoc Rd

Average Delay (sec/veh): 3.1 Worst Case Level Of Service: B[ 13.6]

| Street Name: | Calle de los Amigos | | | | | | | | | Modoc Rd | | | | | | | | |
|---|---|---|---|---|---|---|---|---|---|---|---|---|---|---|---|---|---|---|
| Approach: | North Bound | | | | | South Bound | | | | | East Bound | | | | | West Bound | | |
| Movement: | L | - | T | - | R | L | - | T | - | R | L | - | T | - | R | L | - | T | - | R |
| Control: | Stop Sign | | | | | Stop Sign | | | | | Uncontrolled | | | | | Uncontrolled | | | | |
| Rights: | Include | | | | | Include | | | | | Include | | | | | Include | | | | |
| Lanes: | 1 | 0 | 0 | 0 | 1 | 0 | 0 | 0 | 0 | 0 | 0 | 0 | 0 | 1 | 0 | 1 | 0 | 1 | 0 | 0 |
| Volume Module: | | | | | | | | | | | | | | | | | | | | |
| Base Vol: | 96 | | 0 | | 45 | 0 | | 0 | | 0 | 0 | | 194 | | 52 | 19 | | 306 | | 0 |
| Growth Adj: | 1.02 | 1.02 | | 1.02 | | 1.02 | 1.02 | | 1.02 | | 1.02 | 1.02 | | 1.02 | | 1.02 | 1.02 | | 1.02 | |
| Initial Bse: | 98 | | 0 | | 46 | 0 | | 0 | | 0 | 0 | | 198 | | 53 | 19 | | 312 | | 0 |
| Added Vol: | 18 | | 0 | | 1 | 0 | | 0 | | 0 | 0 | | 7 | | 2 | 1 | | 3 | | 0 |
| PasserByVol: | 0 | | 0 | | 0 | 0 | | 0 | | 0 | 0 | | 0 | | 0 | 0 | | 0 | | 0 |
| Initial Fut: | 116 | | 0 | | 47 | 0 | | 0 | | 0 | 0 | | 205 | | 55 | 20 | | 315 | | 0 |
| User Adj: | 1.00 | 1.00 | | 1.00 | | 1.00 | 1.00 | | 1.00 | | 1.00 | 1.00 | | 1.00 | | 1.00 | 1.00 | | 1.00 | |
| PHF Adj: | 1.00 | 1.00 | | 1.00 | | 1.00 | 1.00 | | 1.00 | | 1.00 | 1.00 | | 1.00 | | 1.00 | 1.00 | | 1.00 | |
| PHF Volume: | 116 | | 0 | | 47 | 0 | | 0 | | 0 | 0 | | 205 | | 55 | 20 | | 315 | | 0 |
| Reduct Vol: | 0 | | 0 | | 0 | 0 | | 0 | | 0 | 0 | | 0 | | 0 | 0 | | 0 | | 0 |
| FinalVolume: | 116 | | 0 | | 47 | 0 | | 0 | | 0 | 0 | | 205 | | 55 | 20 | | 315 | | 0 |
| Critical Gap Module: | | | | | | | | | | | | | | | | | | | | |
| Critical Gp: | 6.4 | xxxx | | 6.2 | xxxxx | xxxx | xxxxx | xxxxx | xxxx | xxxxx | | 4.1 | xxxx | xxxxx | | | | | | |
| FollowUpTim: | 3.5 | xxxx | | 3.3 | xxxxx | xxxx | xxxxx | xxxxx | xxxx | xxxxx | | 2.2 | xxxx | xxxxx | | | | | | |
| Capacity Module: | | | | | | | | | | | | | | | | | | | | |
| Cnflict Vol: | 588 | xxxx | | 232 | xxxx | xxxx | xxxxx | xxxx | xxxx | xxxxx | | 260 | xxxx | xxxxx | | | | | | |
| Potent Cap.: | 475 | xxxx | | 812 | xxxx | xxxx | xxxxx | xxxx | xxxx | xxxxx | | 1316 | xxxx | xxxxx | | | | | | |
| Move Cap.: | 469 | xxxx | | 812 | xxxx | xxxx | xxxxx | xxxx | xxxx | xxxxx | | 1316 | xxxx | xxxxx | | | | | | |
| Volume/Cap: | 0.25 | xxxx | | 0.06 | xxxx | xxxx | xxxx | xxxx | xxxx | xxxx | | 0.02 | xxxx | xxxx | | | | | | |
| Level Of Service Module: | | | | | | | | | | | | | | | | | | | | |
| 2Way95thQ: | 1.0 | xxxx | | 0.2 | xxxx | xxxx | xxxxx | xxxx | xxxx | xxxxx | | 0.0 | xxxx | xxxxx | | | | | | |
| Control Del: | 15.2 | xxxx | | 9.7 | xxxxx | xxxx | xxxxx | xxxxx | xxxx | xxxxx | | 7.8 | xxxx | xxxxx | | | | | | |
| LOS by Move: | C | * | | A | * | * | * | * | * | * | | A | * | * | | | | | | |
| Movement: | LT | - | LTR | - | RT | LT | - | LTR | - | RT | LT | - | LTR | - | RT | LT | - | LTR | - | RT |
| Shared Cap.: | xxxx | xxxx | xxxxx | | | xxxx | xxxx | xxxxx | | | xxxx | xxxx | xxxxx | | | xxxx | xxxx | xxxxx | | |
| SharedQueue: | xxxxx | xxxx | xxxxx | | | xxxxx | xxxx | xxxxx | | | xxxxx | xxxx | xxxxx | | | xxxxx | xxxx | xxxxx | | |
| Shrd ConDel: | xxxxx | xxxx | xxxxx | | | xxxxx | xxxx | xxxxx | | | xxxxx | xxxx | xxxxx | | | xxxxx | xxxx | xxxxx | | |
| Shared LOS: | * | * | * | | | * | * | * | | | * | * | * | | | * | * | * | | |
| ApproachDel: | | | 13.6 | | | | | xxxxxx | | | | | xxxxxx | | | | | xxxxxx | | |
| ApproachLOS: | | | B | | | | | * | | | | | * | | | | | * | | |

Note: Queue reported is the number of cars per lane.

Traffix 7.9.0215 (c) 2008 Dowling Assoc. Licensed to MMA, LONG BEACH, CA

Valle Verde Home Project
Existing+Ambient+Cumulative+Project (Proposed Project)
AM Peak Hour

Level Of Service Computation Report
2000 HCM 4-Way Stop Method (Future Volume Alternative)

Intersection #7 Via Senda at Modoc Rd

| | | | |
|---|---|---|---|
| Cycle (sec): | 100 | Critical Vol./Cap.(X): | 0.445 |
| Loss Time (sec): | 0 (Y+R=4.0 sec) | Average Delay (sec/veh): | 10.0 |
| Optimal Cycle: | 0 | Level Of Service: | B |

| Street Name: | Via Senda | | | | | | Modoc Rd | | | | | |
|---|---|---|---|---|---|---|---|---|---|---|---|---|
| Approach: | North Bound | | | South Bound | | | East Bound | | | West Bound | | |
| Movement: | L - | T - | R | L - | T - | R | L - | T - | R | L - | T - | R |
| Control: | Stop Sign | | | Stop Sign | | | Stop Sign | | | Stop Sign | | |
| Rights: | Include | | | Include | | | Include | | | Include | | |
| Min. Green: | 0 | 0 | 0 | 0 | 0 | 0 | 0 | 0 | 0 | 0 | 0 | 0 |
| Lanes: | 0 0 | 1! 0 | 0 | 0 0 | 0 0 | 0 | 0 0 | 0 1 | 0 | 0 1 | 0 0 | 0 |
| Volume Module: | | | | | | | | | | | | |
| Base Vol: | 37 | 0 | 136 | 0 | 0 | 0 | 0 | 116 | 94 | 175 | 131 | 0 |
| Growth Adj: | 1.02 | 1.02 | 1.02 | 1.02 | 1.02 | 1.02 | 1.02 | 1.02 | 1.02 | 1.02 | 1.02 | 1.02 |
| Initial Bse: | 38 | 0 | 139 | 0 | 0 | 0 | 0 | 118 | 96 | 179 | 134 | 0 |
| Added Vol: | 0 | 0 | 5 | 0 | 0 | 0 | 0 | 4 | 0 | 18 | 3 | 0 |
| PasserByVol: | 0 | 0 | 0 | 0 | 0 | 0 | 0 | 0 | 0 | 0 | 0 | 0 |
| Initial Fut: | 38 | 0 | 144 | 0 | 0 | 0 | 0 | 122 | 96 | 197 | 137 | 0 |
| User Adj: | 1.00 | 1.00 | 1.00 | 1.00 | 1.00 | 1.00 | 1.00 | 1.00 | 1.00 | 1.00 | 1.00 | 1.00 |
| PHF Adj: | 1.00 | 1.00 | 1.00 | 1.00 | 1.00 | 1.00 | 1.00 | 1.00 | 1.00 | 1.00 | 1.00 | 1.00 |
| PHF Volume: | 38 | 0 | 144 | 0 | 0 | 0 | 0 | 122 | 96 | 197 | 137 | 0 |
| Reduct Vol: | 0 | 0 | 0 | 0 | 0 | 0 | 0 | 0 | 0 | 0 | 0 | 0 |
| Reduced Vol: | 38 | 0 | 144 | 0 | 0 | 0 | 0 | 122 | 96 | 197 | 137 | 0 |
| PCE Adj: | 1.00 | 1.00 | 1.00 | 1.00 | 1.00 | 1.00 | 1.00 | 1.00 | 1.00 | 1.00 | 1.00 | 1.00 |
| MLF Adj: | 1.00 | 1.00 | 1.00 | 1.00 | 1.00 | 1.00 | 1.00 | 1.00 | 1.00 | 1.00 | 1.00 | 1.00 |
| FinalVolume: | 38 | 0 | 144 | 0 | 0 | 0 | 0 | 122 | 96 | 197 | 137 | 0 |
| Saturation Flow Module: | | | | | | | | | | | | |
| Adjustment: | 1.00 | 1.00 | 1.00 | 1.00 | 1.00 | 1.00 | 1.00 | 1.00 | 1.00 | 1.00 | 1.00 | 1.00 |
| Lanes: | 0.20 | 0.01 | 0.79 | 0.00 | 0.00 | 0.00 | 0.00 | 0.56 | 0.44 | 0.59 | 0.41 | 0.00 |
| Final Sat.: | 149 | 0 | 568 | 0 | 0 | 0 | 0 | 437 | 342 | 441 | 307 | 0 |
| Capacity Analysis Module: | | | | | | | | | | | | |
| Vol/Sat: | 0.25 | 0.00 | 0.25 | xxxx | xxxx | xxxx | xxxx | 0.28 | 0.28 | 0.45 | 0.45 | xxxx |
| Crit Moves: | | | **** | | | | | **** | | | **** | |
| Delay/Veh: | 9.1 | 9.1 | 9.1 | 0.0 | 0.0 | 0.0 | 0.0 | 9.1 | 9.1 | 11.2 | 11.2 | 0.0 |
| Delay Adj: | 1.00 | 1.00 | 1.00 | 1.00 | 1.00 | 1.00 | 1.00 | 1.00 | 1.00 | 1.00 | 1.00 | 1.00 |
| AdjDel/Veh: | 9.1 | 9.1 | 9.1 | 0.0 | 0.0 | 0.0 | 0.0 | 9.1 | 9.1 | 11.2 | 11.2 | 0.0 |
| LOS by Move: | A | A | A | * | * | * | * | A | A | B | B | * |
| ApproachDel: | 9.1 | | | xxxxxx | | | | 9.1 | | | 11.2 | |
| Delay Adj: | 1.00 | | | xxxxx | | | | 1.00 | | | 1.00 | |
| ApprAdjDel: | 9.1 | | | xxxxxx | | | | 9.1 | | | 11.2 | |
| LOS by Appr: | A | | | * | | | | A | | | B | |
| AllWayAvgQ: | 0.3 | 0.3 | 0.3 | 0.0 | 0.0 | 0.0 | 0.4 | 0.4 | 0.4 | 0.7 | 0.7 | 0.7 |

Note: Queue reported is the number of cars per lane.

Traffix 7.9.0215 (c) 2008 Dowling Assoc. Licensed to MMA, LONG BEACH, CA

Valle Verde Home Project
Existing+Ambient+Cumulative+Project (Proposed Project)
AM Peak Hour

Level Of Service Computation Report
2000 HCM 4-Way Stop Method (Future Volume Alternative)

Intersection #8 Via Senda at Las Palmas Dr

Cycle (sec): 100 | Critical Vol./Cap.(X): 0.565
Loss Time (sec): 0 (Y+R=4.0 sec) | Average Delay (sec/veh): 13.7
Optimal Cycle: 0 | Level Of Service: B

| Street Name: | Via Senda | | | | | | Las Palmas Dr | | | | | |
|---|---|---|---|---|---|---|---|---|---|---|---|---|
| Approach: | North Bound | | | South Bound | | | East Bound | | | West Bound | | |
| Movement: | L - | T - | R | L - | T - | R | L - | T - | R | L - | T - | R |
| Control: | Stop Sign | | | Stop Sign | | | Stop Sign | | | Stop Sign | | |
| Rights: | Include | | | Include | | | Include | | | Include | | |
| Min. Green: | 0 | 0 | 0 | 0 | 0 | 0 | 0 | 0 | 0 | 0 | 0 | 0 |
| Lanes: | 0 0 | 0 0 | 0 | 0 0 | 1! 0 | 0 | 0 1 | 0 0 | 0 | 0 0 | 1 0 | 1 |
| Volume Module: | | | | | | | | | | | | |
| Base Vol: | 0 | 0 | 0 | 237 | 0 | 34 | 26 | 283 | 0 | 0 | 337 | 146 |
| Growth Adj: | 1.02 | 1.02 | 1.02 | 1.02 | 1.02 | 1.02 | 1.02 | 1.02 | 1.02 | 1.02 | 1.02 | 1.02 |
| Initial Bse: | 0 | 0 | 0 | 242 | 0 | 35 | 27 | 289 | 0 | 0 | 344 | 149 |
| Added Vol: | 0 | 0 | 0 | 18 | 0 | 0 | 0 | 6 | 0 | 0 | 2 | 5 |
| PasserByVol: | 0 | 0 | 0 | 0 | 0 | 0 | 0 | 0 | 0 | 0 | 0 | 0 |
| Initial Fut: | 0 | 0 | 0 | 260 | 0 | 35 | 27 | 295 | 0 | 0 | 346 | 154 |
| User Adj: | 1.00 | 1.00 | 1.00 | 1.00 | 1.00 | 1.00 | 1.00 | 1.00 | 1.00 | 1.00 | 1.00 | 1.00 |
| PHF Adj: | 1.00 | 1.00 | 1.00 | 1.00 | 1.00 | 1.00 | 1.00 | 1.00 | 1.00 | 1.00 | 1.00 | 1.00 |
| PHF Volume: | 0 | 0 | 0 | 260 | 0 | 35 | 27 | 295 | 0 | 0 | 346 | 154 |
| Reduct Vol: | 0 | 0 | 0 | 0 | 0 | 0 | 0 | 0 | 0 | 0 | 0 | 0 |
| Reduced Vol: | 0 | 0 | 0 | 260 | 0 | 35 | 27 | 295 | 0 | 0 | 346 | 154 |
| PCE Adj: | 1.00 | 1.00 | 1.00 | 1.00 | 1.00 | 1.00 | 1.00 | 1.00 | 1.00 | 1.00 | 1.00 | 1.00 |
| MLF Adj: | 1.00 | 1.00 | 1.00 | 1.00 | 1.00 | 1.00 | 1.00 | 1.00 | 1.00 | 1.00 | 1.00 | 1.00 |
| FinalVolume: | 0 | 0 | 0 | 260 | 0 | 35 | 27 | 295 | 0 | 0 | 346 | 154 |
| Saturation Flow Module: | | | | | | | | | | | | |
| Adjustment: | 1.00 | 1.00 | 1.00 | 1.00 | 1.00 | 1.00 | 1.00 | 1.00 | 1.00 | 1.00 | 1.00 | 1.00 |
| Lanes: | 0.00 | 0.00 | 0.00 | 0.88 | 0.01 | 0.11 | 0.08 | 0.92 | 0.00 | 0.00 | 1.00 | 1.00 |
| Final Sat.: | 0 | 0 | 0 | 520 | 0 | 69 | 52 | 582 | 0 | 0 | 612 | 694 |
| Capacity Analysis Module: | | | | | | | | | | | | |
| Vol/Sat: | xxxx | xxxx | xxxx | 0.50 | 0.00 | 0.50 | 0.51 | 0.51 | xxxx | xxxx | 0.57 | 0.22 |
| Crit Moves: | | | | **** | | | | **** | | | **** | |
| Delay/Veh: | 0.0 | 0.0 | 0.0 | 14.0 | 14.0 | 14.0 | 13.7 | 13.7 | 0.0 | 0.0 | 15.4 | 9.2 |
| Delay Adj: | 1.00 | 1.00 | 1.00 | 1.00 | 1.00 | 1.00 | 1.00 | 1.00 | 1.00 | 1.00 | 1.00 | 1.00 |
| AdjDel/Veh: | 0.0 | 0.0 | 0.0 | 14.0 | 14.0 | 14.0 | 13.7 | 13.7 | 0.0 | 0.0 | 15.4 | 9.2 |
| LOS by Move: | * | * | * | B | B | B | B | B | * | * | C | A |
| ApproachDel: | xxxxxx | | | 14.0 | | | 13.7 | | | 13.4 | | |
| Delay Adj: | xxxxx | | | 1.00 | | | 1.00 | | | 1.00 | | |
| ApprAdjDel: | xxxxxx | | | 14.0 | | | 13.7 | | | 13.4 | | |
| LOS by Appr: | * | | | B | | | B | | | B | | |
| AllWayAvgQ: | 0.0 | 0.0 | 0.0 | 0.8 | 0.8 | 0.8 | 0.9 | 0.9 | 0.9 | 0.0 | 1.2 | 0.3 |

Note: Queue reported is the number of cars per lane.

Valle Verde Home Project
Existing+Ambient+Cumulative+Project (Proposed Project)
AM Peak Hour

Level Of Service Computation Report
2000 HCM Operations Method (Future Volume Alternative)

Intersection #9 Las Palmas/S La Cumbre Rd at US-101 SB Ramps

| | | | |
|---|---|---|---|
| Cycle (sec): | 100 | Critical Vol./Cap.(X): | 0.546 |
| Loss Time (sec): | 10 (Y+R=4.0 sec) | Average Delay (sec/veh): | 26.3 |
| Optimal Cycle: | 39 | Level Of Service: | C |

| Approach: | North Bound | | | South Bound | | | East Bound | | | West Bound | | |
|---|---|---|---|---|---|---|---|---|---|---|---|---|
| Movement: | L | T | R | L | T | R | L | T | R | L | T | R |
| Control: | Protected | | | Protected | | | Protected | | | Protected | | |
| Rights: | Include | | | Include | | | Include | | | Include | | |
| Min. Green: | 0 | 0 | 0 | 0 | 0 | 0 | 0 | 0 | 0 | 0 | 0 | 0 |
| Lanes: | 0 0 2 | 0 | 1 | 2 0 | 1 | 0 0 | 1 1 | 0 | 0 1 | 0 0 | 0 | 0 0 |
| Volume Module: | | | | | | | | | | | | |
| Base Vol: | 0 | 422 | 239 | 449 | 385 | 0 | 458 | 5 | 110 | 0 | 0 | 0 |
| Growth Adj: | 1.02 | 1.02 | 1.02 | 1.02 | 1.02 | 1.02 | 1.02 | 1.02 | 1.02 | 1.02 | 1.02 | 1.02 |
| Initial Bse: | 0 | 430 | 244 | 458 | 393 | 0 | 467 | 5 | 112 | 0 | 0 | 0 |
| Added Vol: | 0 | 24 | 0 | 0 | 2 | 0 | 0 | 0 | 4 | 0 | 0 | 0 |
| PasserByVol: | 0 | 4 | 0 | 3 | 1 | 0 | 0 | 0 | 0 | 0 | 0 | 0 |
| Initial Fut: | 0 | 458 | 244 | 461 | 396 | 0 | 467 | 5 | 116 | 0 | 0 | 0 |
| User Adj: | 1.00 | 1.00 | 1.00 | 1.00 | 1.00 | 1.00 | 1.00 | 1.00 | 1.00 | 1.00 | 1.00 | 1.00 |
| PHF Adj: | 1.00 | 1.00 | 1.00 | 1.00 | 1.00 | 1.00 | 1.00 | 1.00 | 1.00 | 1.00 | 1.00 | 1.00 |
| PHF Volume: | 0 | 458 | 244 | 461 | 396 | 0 | 467 | 5 | 116 | 0 | 0 | 0 |
| Reduct Vol: | 0 | 0 | 0 | 0 | 0 | 0 | 0 | 0 | 0 | 0 | 0 | 0 |
| Reduced Vol: | 0 | 458 | 244 | 461 | 396 | 0 | 467 | 5 | 116 | 0 | 0 | 0 |
| PCE Adj: | 1.00 | 1.00 | 1.00 | 1.00 | 1.00 | 1.00 | 1.00 | 1.00 | 1.00 | 1.00 | 1.00 | 1.00 |
| MLF Adj: | 1.00 | 1.00 | 1.00 | 1.00 | 1.00 | 1.00 | 1.00 | 1.00 | 1.00 | 1.00 | 1.00 | 1.00 |
| FinalVolume: | 0 | 458 | 244 | 461 | 396 | 0 | 467 | 5 | 116 | 0 | 0 | 0 |
| Saturation Flow Module: | | | | | | | | | | | | |
| Sat/Lane: | 1900 | 1900 | 1900 | 1900 | 1900 | 1900 | 1900 | 1900 | 1900 | 1900 | 1900 | 1900 |
| Adjustment: | 1.00 | 0.95 | 0.85 | 0.74 | 1.00 | 1.00 | 0.70 | 0.88 | 0.85 | 1.00 | 1.00 | 1.00 |
| Lanes: | 0.00 | 2.00 | 1.00 | 2.00 | 1.00 | 0.00 | 1.98 | 0.02 | 1.00 | 0.00 | 0.00 | 0.00 |
| Final Sat.: | 0 | 3610 | 1615 | 2801 | 1900 | 0 | 2655 | 29 | 1615 | 0 | 0 | 0 |
| Capacity Analysis Module: | | | | | | | | | | | | |
| Vol/Sat: | 0.00 | 0.13 | 0.15 | 0.16 | 0.21 | 0.00 | 0.18 | 0.18 | 0.07 | 0.00 | 0.00 | 0.00 |
| Crit Moves: | | | **** | **** | | | **** | | | | | |
| Green/Cycle: | 0.00 | 0.28 | 0.28 | 0.30 | 0.58 | 0.00 | 0.32 | 0.32 | 0.32 | 0.00 | 0.00 | 0.00 |
| Volume/Cap: | 0.00 | 0.46 | 0.55 | 0.55 | 0.36 | 0.00 | 0.55 | 0.55 | 0.22 | 0.00 | 0.00 | 0.00 |
| Delay/Veh: | 0.0 | 30.3 | 32.2 | 30.0 | 11.5 | 0.0 | 28.6 | 28.6 | 25.0 | 0.0 | 0.0 | 0.0 |
| User DelAdj: | 1.00 | 1.00 | 1.00 | 1.00 | 1.00 | 1.00 | 1.00 | 1.00 | 1.00 | 1.00 | 1.00 | 1.00 |
| AdjDel/Veh: | 0.0 | 30.3 | 32.2 | 30.0 | 11.5 | 0.0 | 28.6 | 28.6 | 25.0 | 0.0 | 0.0 | 0.0 |
| LOS by Move: | A | C | C | C | B | A | C | C | C | A | A | A |
| HCM2kAvgQ: | 0 | 6 | 7 | 7 | 6 | 0 | 7 | 8 | 3 | 0 | 0 | 0 |

Note: Queue reported is the number of cars per lane.

# CUMULATIVE PROJECT
# LOS WORKSHEETS

# WEEKDAY PM PEAK HOUR

Valle Verde Home Project
Existing+Ambient+Cumulative+Project (Proposed Project)
PM Peak Hour

Scenario Report

| | |
|---|---|
| Scenario: | E+A+C+P Alt1 PM |
| Command: | E+A+C+P Alt1 PM |
| Volume: | E+A+C+P PM |
| Geometry: | Existing |
| Impact Fee: | Default Impact Fee |
| Trip Generation: | PM Peak |
| Trip Distribution: | Trip Distribution |
| Paths: | Default Path |
| Routes: | Default Route |
| Configuration: | E+A+C+P Alt1 PM |

Valle Verde Home Project
Existing+Ambient+Cumulative+Project (Proposed Project)
PM Peak Hour

Trip Generation Report

Forecast for PM Peak

| Zone # | Subzone | Amount | Units | Rate In | Rate Out | Trips In | Trips Out | Total Trips | % Of Total |
|---|---|---|---|---|---|---|---|---|---|
| 1 | 1235 Veronic | 1.00 | Residential | 44.00 | 21.00 | 44 | 21 | 65 | 11.3 |
| | Zone 1 Subtotal | | | | | 44 | 21 | 65 | 11.3 |
| 5 | 3820 State S | 1.00 | Office | 18.00 | 89.00 | 18 | 89 | 107 | 18.6 |
| | Zone 5 Subtotal | | | | | 18 | 89 | 107 | 18.6 |
| 6 | 900-1100 Las | 1.00 | Residential | 10.00 | 17.00 | 10 | 17 | 27 | 4.7 |
| | Zone 6 Subtotal | | | | | 10 | 17 | 27 | 4.7 |
| 12 | 215 Pesetas | 1.00 | Medical | 17.00 | 24.00 | 17 | 24 | 41 | 7.1 |
| | Zone 12 Subtotal | | | | | 17 | 24 | 41 | 7.1 |
| 13 | Elings Park | 1.00 | Park | 76.00 | 79.00 | 76 | 79 | 155 | 27.0 |
| | Zone 13 Subtotal | | | | | 76 | 79 | 155 | 27.0 |
| 14 | Cancer Cente | 1.00 | Medical Office | 47.00 | 120.00 | 47 | 120 | 167 | 29.1 |
| | Zone 14 Subtotal | | | | | 47 | 120 | 167 | 29.1 |
| 101 | Project (Val | 1.00 | Residential | 6.00 | 6.00 | 6 | 6 | 12 | 2.1 |
| | Zone 101 Subtotal | | | | | 6 | 6 | 12 | 2.1 |
| TOTAL | | | | | | 218 | 356 | 574 | 100.0 |

Valle Verde Home Project
Existing+Ambient+Cumulative+Project (Proposed Project)
PM Peak Hour

Trip Distribution Report

Percent Of Trips Distribution

| | To Gates | | | | | | | | | | |
|---|---|---|---|---|---|---|---|---|---|---|---|
| Zone | 1 | 2 | 3 | 4 | 5 | 6 | 7 | 8 | 9 | 10 | 11 |
| 1 | 10.0 | 5.0 | 30.0 | 30.0 | 5.0 | 5.0 | 0.0 | 15.0 | 0.0 | 0.0 | 0.0 |
| 5 | 0.0 | 0.0 | 40.0 | 30.0 | 0.0 | 0.0 | 2.5 | 2.5 | 5.0 | 15.0 | 5.0 |
| 6 | 10.0 | 5.0 | 30.0 | 30.0 | 5.0 | 5.0 | 0.0 | 15.0 | 0.0 | 0.0 | 0.0 |
| 12 | 0.0 | 0.0 | 40.0 | 30.0 | 0.0 | 0.0 | 2.5 | 2.5 | 5.0 | 15.0 | 5.0 |
| 13 | 10.0 | 5.0 | 30.0 | 30.0 | 5.0 | 5.0 | 5.0 | 10.0 | 0.0 | 0.0 | 0.0 |
| 14 | 0.0 | 10.0 | 35.0 | 25.0 | 0.0 | 0.0 | 3.0 | 2.0 | 10.0 | 15.0 | 0.0 |
| 101 | 5.0 | 5.0 | 40.0 | 30.0 | 5.0 | 0.0 | 0.0 | 10.0 | 0.0 | 5.0 | 0.0 |

Valle Verde Home Project
Existing+Ambient+Cumulative+Project (Proposed Project)
PM Peak Hour

Turning Movement Report
PM Peak

| Volume | Northbound | | | Southbound | | | Eastbound | | | Westbound | | | Total |
|---|---|---|---|---|---|---|---|---|---|---|---|---|---|
| Type | Left | Thru | Right | Left | Thru | Right | Left | Thru | Right | Left | Thru | Right | Volume |
| #6 Calle de los Amigos at Modoc Rd | | | | | | | | | | | | | |
| Base | 71 | 0 | 36 | 0 | 0 | 0 | 0 | 335 | 111 | 49 | 281 | 0 | 882 |
| Added | 10 | 0 | 1 | 0 | 0 | 0 | 0 | 20 | 5 | 1 | 6 | 0 | 43 |
| Total | 81 | 0 | 37 | 0 | 0 | 0 | 0 | 355 | 116 | 50 | 287 | 0 | 925 |
| #7 Via Senda at Modoc Rd | | | | | | | | | | | | | |
| Base | 100 | 0 | 210 | 0 | 0 | 0 | 0 | 192 | 71 | 181 | 183 | 0 | 936 |
| Added | 0 | 0 | 18 | 0 | 0 | 0 | 0 | 7 | 0 | 10 | 6 | 0 | 41 |
| Total | 100 | 0 | 228 | 0 | 0 | 0 | 0 | 199 | 71 | 191 | 189 | 0 | 977 |
| #8 Via Senda at Las Palmas Dr | | | | | | | | | | | | | |
| Base | 0 | 0 | 0 | 231 | 0 | 28 | 28 | 279 | 0 | 0 | 276 | 275 | 1117 |
| Added | 0 | 0 | 0 | 10 | 0 | 0 | 0 | 2 | 0 | 0 | 6 | 18 | 36 |
| Total | 0 | 0 | 0 | 241 | 0 | 28 | 28 | 281 | 0 | 0 | 282 | 293 | 1153 |
| #9 Las Palmas/S La Cumbre Rd at US-101 SB Ramps | | | | | | | | | | | | | |
| Base | 0 | 320 | 147 | 611 | 393 | 0 | 616 | 1 | 77 | 0 | 0 | 0 | 2164 |
| Added | 0 | 12 | 0 | 0 | 8 | 0 | 0 | 0 | 16 | 0 | 0 | 0 | 36 |
| PassBy | 0 | 3 | 0 | 21 | 7 | 0 | 0 | 0 | 0 | 0 | 0 | 0 | 31 |
| Total | 0 | 335 | 147 | 632 | 408 | 0 | 616 | 1 | 93 | 0 | 0 | 0 | 2231 |

Valle Verde Home Project
Existing+Ambient+Cumulative+Project (Proposed Project)
PM Peak Hour

Impact Analysis Report
Level Of Service

| Intersection | Base LOS | Base Del/ Veh | Base V/ C | Future LOS | Future Del/ Veh | Future V/ C | Change in |
|---|---|---|---|---|---|---|---|
| # 6 Calle de los Amigos at Modoc R | C | 15.2 | 0.000 | C | 16.2 | 0.000 | + 1.019 D/V |
| # 7 Via Senda at Modoc Rd | B | 12.2 | 0.535 | B | 12.8 | 0.567 | + 0.032 V/C |
| # 8 Via Senda at Las Palmas Dr | B | 12.2 | 0.471 | B | 12.5 | 0.481 | + 0.009 V/C |
| # 9 Las Palmas/S La Cumbre Rd at | B | xxxxx | 0.680 | B | xxxxx | 0.693 | + 0.013 V/C |

Traffix 7.9.0215 (c) 2008 Dowling Assoc. Licensed to MMA, LONG BEACH, CA

Valle Verde Home Project
Existing+Ambient+Cumulative+Project (Proposed Project)
PM Peak Hour

Level Of Service Computation Report
2000 HCM Unsignalized Method (Future Volume Alternative)

Intersection #6 Calle de los Amigos at Modoc Rd

Average Crit Del (sec/veh): 2.5 Worst Case Level Of Service: C[ 16.2]

| Street Name: | Calle de los Amigos | | | | | | | | | Modoc Rd | | | | | | | | |
|---|---|---|---|---|---|---|---|---|---|---|---|---|---|---|---|---|---|---|
| Approach: | North Bound | | | | | South Bound | | | | | East Bound | | | | | West Bound | | |
| Movement: | L | - | T | - | R | L | - | T | - | R | L | - | T | - | R | L | - | T | - | R |
| Control: | Stop Sign | | | | | Stop Sign | | | | | Uncontrolled | | | | | Uncontrolled | | | | |
| Rights: | Include | | | | | Include | | | | | Include | | | | | Include | | | | |
| Lanes: | 1 | 0 | 0 | 0 | 1 | 0 | 0 | 0 | 0 | 0 | 0 | 0 | 0 | 1 | 0 | 1 | 0 | 1 | 0 | 0 |
| Volume Module: | | | | | | | | | | | | | | | | | | | | |
| Base Vol: | 70 | | 0 | | 35 | 0 | | 0 | | 0 | 0 | | 328 | | 109 | 48 | | 275 | | 0 |
| Growth Adj: | 1.02 | 1.02 | | 1.02 | | 1.02 | 1.02 | | 1.02 | | 1.02 | 1.02 | | 1.02 | | 1.02 | 1.02 | | 1.02 | |
| Initial Bse: | 71 | | 0 | | 36 | 0 | | 0 | | 0 | 0 | | 335 | | 111 | 49 | | 281 | | 0 |
| Added Vol: | 10 | | 0 | | 1 | 0 | | 0 | | 0 | 0 | | 20 | | 5 | 1 | | 6 | | 0 |
| PasserByVol: | 0 | | 0 | | 0 | 0 | | 0 | | 0 | 0 | | 0 | | 0 | 0 | | 0 | | 0 |
| Initial Fut: | 81 | | 0 | | 37 | 0 | | 0 | | 0 | 0 | | 355 | | 116 | 50 | | 287 | | 0 |
| User Adj: | 1.00 | 1.00 | | 1.00 | | 1.00 | 1.00 | | 1.00 | | 1.00 | 1.00 | | 1.00 | | 1.00 | 1.00 | | 1.00 | |
| PHF Adj: | 1.00 | 1.00 | | 1.00 | | 1.00 | 1.00 | | 1.00 | | 1.00 | 1.00 | | 1.00 | | 1.00 | 1.00 | | 1.00 | |
| PHF Volume: | 81 | | 0 | | 37 | 0 | | 0 | | 0 | 0 | | 355 | | 116 | 50 | | 287 | | 0 |
| Reduct Vol: | 0 | | 0 | | 0 | 0 | | 0 | | 0 | 0 | | 0 | | 0 | 0 | | 0 | | 0 |
| FinalVolume: | 81 | | 0 | | 37 | 0 | | 0 | | 0 | 0 | | 355 | | 116 | 50 | | 287 | | 0 |
| Critical Gap Module: | | | | | | | | | | | | | | | | | | | | |
| Critical Gp: | 6.4 | xxxx | | | 6.2 | xxxxx | xxxx | xxxxx | | xxxxx | xxxx | xxxxx | | | 4.1 | xxxx | xxxxx | | | |
| FollowUpTim: | 3.5 | xxxx | | | 3.3 | xxxxx | xxxx | xxxxx | | xxxxx | xxxx | xxxxx | | | 2.2 | xxxx | xxxxx | | | |
| Capacity Module: | | | | | | | | | | | | | | | | | | | | |
| Cnflict Vol: | 799 | xxxx | | | 413 | xxxx | xxxx | xxxxx | | xxxx | xxxx | xxxxx | | | 471 | xxxx | xxxxx | | | |
| Potent Cap.: | 357 | xxxx | | | 644 | xxxx | xxxx | xxxxx | | xxxx | xxxx | xxxxx | | | 1102 | xxxx | xxxxx | | | |
| Move Cap.: | 345 | xxxx | | | 644 | xxxx | xxxx | xxxxx | | xxxx | xxxx | xxxxx | | | 1102 | xxxx | xxxxx | | | |
| Volume/Cap: | 0.24 | xxxx | | | 0.06 | xxxx | xxxx | xxxx | | xxxx | xxxx | xxxx | | | 0.05 | xxxx | xxxx | | | |
| Level Of Service Module: | | | | | | | | | | | | | | | | | | | | |
| 2Way95thQ: | 0.9 | xxxx | | | 0.2 | xxxx | xxxx | xxxxx | | xxxx | xxxx | xxxxx | | | 0.1 | xxxx | xxxxx | | | |
| Control Del: | 18.6 | xxxx | | | 10.9 | xxxxx | xxxx | xxxxx | | xxxxx | xxxx | xxxxx | | | 8.4 | xxxx | xxxxx | | | |
| LOS by Move: | C | | * | | B | * | * | * | | * | * | * | | | A | * | * | | | |
| Movement: | LT | - | LTR | - | RT | LT | - | LTR | - | RT | LT | - | LTR | - | RT | LT | - | LTR | - | RT |
| Shared Cap.: | xxxx | xxxx | | | xxxxx | xxxx | xxxx | xxxxx | | xxxx | xxxx | xxxxx | | | xxxx | xxxx | xxxxx | | | |
| SharedQueue: | xxxxx | xxxx | | | xxxxx | xxxxx | xxxx | xxxxx | | xxxxx | xxxx | xxxxx | | | xxxxx | xxxx | xxxxx | | | |
| Shrd ConDel: | xxxxx | xxxx | | | xxxxx | xxxxx | xxxx | xxxxx | | xxxxx | xxxx | xxxxx | | | xxxxx | xxxx | xxxxx | | | |
| Shared LOS: | * | | * | | * | * | | * | | * | * | | * | | * | * | | * | | |
| ApproachDel: | | | 16.2 | | | | | xxxxxx | | | | | xxxxxx | | | | | xxxxxx | | |
| ApproachLOS: | | | C | | | | | * | | | | | * | | | | | * | | |

Note: Queue reported is the number of cars per lane.

Valle Verde Home Project
Existing+Ambient+Cumulative+Project (Proposed Project)
PM Peak Hour

Level Of Service Computation Report
2000 HCM 4-Way Stop Method (Future Volume Alternative)

Intersection #7 Via Senda at Modoc Rd

Cycle (sec): 100 | Critical Vol./Cap.(X): 0.567
Loss Time (sec): 0 (Y+R=4.0 sec) | Average Delay (sec/veh): 12.8
Optimal Cycle: 0 | Level Of Service: B

| Street Name: | Via Senda | | | | | | Modoc Rd | | | | | |
|---|---|---|---|---|---|---|---|---|---|---|---|---|
| Approach: | North Bound | | | South Bound | | | East Bound | | | West Bound | | |
| Movement: | L - | T - | R | L - | T - | R | L - | T - | R | L - | T - | R |
| Control: | Stop Sign | | | Stop Sign | | | Stop Sign | | | Stop Sign | | |
| Rights: | Include | | | Include | | | Include | | | Include | | |
| Min. Green: | 0 | 0 | 0 | 0 | 0 | 0 | 0 | 0 | 0 | 0 | 0 | 0 |
| Lanes: | 0 0 | 1! 0 | 0 | 0 0 | 0 0 | 0 | 0 0 | 0 1 | 0 | 0 1 | 0 0 | 0 |
| Volume Module: | | | | | | | | | | | | |
| Base Vol: | 98 | 0 | 206 | 0 | 0 | 0 | 0 | 188 | 70 | 177 | 179 | 0 |
| Growth Adj: | 1.02 | 1.02 | 1.02 | 1.02 | 1.02 | 1.02 | 1.02 | 1.02 | 1.02 | 1.02 | 1.02 | 1.02 |
| Initial Bse: | 100 | 0 | 210 | 0 | 0 | 0 | 0 | 192 | 71 | 181 | 183 | 0 |
| Added Vol: | 0 | 0 | 18 | 0 | 0 | 0 | 0 | 7 | 0 | 10 | 6 | 0 |
| PasserByVol: | 0 | 0 | 0 | 0 | 0 | 0 | 0 | 0 | 0 | 0 | 0 | 0 |
| Initial Fut: | 100 | 0 | 228 | 0 | 0 | 0 | 0 | 199 | 71 | 191 | 189 | 0 |
| User Adj: | 1.00 | 1.00 | 1.00 | 1.00 | 1.00 | 1.00 | 1.00 | 1.00 | 1.00 | 1.00 | 1.00 | 1.00 |
| PHF Adj: | 1.00 | 1.00 | 1.00 | 1.00 | 1.00 | 1.00 | 1.00 | 1.00 | 1.00 | 1.00 | 1.00 | 1.00 |
| PHF Volume: | 100 | 0 | 228 | 0 | 0 | 0 | 0 | 199 | 71 | 191 | 189 | 0 |
| Reduct Vol: | 0 | 0 | 0 | 0 | 0 | 0 | 0 | 0 | 0 | 0 | 0 | 0 |
| Reduced Vol: | 100 | 0 | 228 | 0 | 0 | 0 | 0 | 199 | 71 | 191 | 189 | 0 |
| PCE Adj: | 1.00 | 1.00 | 1.00 | 1.00 | 1.00 | 1.00 | 1.00 | 1.00 | 1.00 | 1.00 | 1.00 | 1.00 |
| MLF Adj: | 1.00 | 1.00 | 1.00 | 1.00 | 1.00 | 1.00 | 1.00 | 1.00 | 1.00 | 1.00 | 1.00 | 1.00 |
| FinalVolume: | 100 | 0 | 228 | 0 | 0 | 0 | 0 | 199 | 71 | 191 | 189 | 0 |
| Saturation Flow Module: | | | | | | | | | | | | |
| Adjustment: | 1.00 | 1.00 | 1.00 | 1.00 | 1.00 | 1.00 | 1.00 | 1.00 | 1.00 | 1.00 | 1.00 | 1.00 |
| Lanes: | 0.30 | 0.00 | 0.70 | 0.00 | 0.00 | 0.00 | 0.00 | 0.74 | 0.26 | 0.50 | 0.50 | 0.00 |
| Final Sat.: | 204 | 0 | 466 | 0 | 0 | 0 | 0 | 494 | 178 | 336 | 333 | 0 |
| Capacity Analysis Module: | | | | | | | | | | | | |
| Vol/Sat: | 0.49 | xxxx | 0.49 | xxxx | xxxx | xxxx | xxxx | 0.40 | 0.40 | 0.57 | 0.57 | xxxx |
| Crit Moves: | **** | | | | | | | **** | | | **** | |
| Delay/Veh: | 12.3 | 0.0 | 12.3 | 0.0 | 0.0 | 0.0 | 0.0 | 11.2 | 11.2 | 14.4 | 14.4 | 0.0 |
| Delay Adj: | 1.00 | 1.00 | 1.00 | 1.00 | 1.00 | 1.00 | 1.00 | 1.00 | 1.00 | 1.00 | 1.00 | 1.00 |
| AdjDel/Veh: | 12.3 | 0.0 | 12.3 | 0.0 | 0.0 | 0.0 | 0.0 | 11.2 | 11.2 | 14.4 | 14.4 | 0.0 |
| LOS by Move: | B | * | B | * | * | * | * | B | B | B | B | * |
| ApproachDel: | 12.3 | | | xxxxxx | | | 11.2 | | | 14.4 | | |
| Delay Adj: | 1.00 | | | xxxxx | | | 1.00 | | | 1.00 | | |
| ApprAdjDel: | 12.3 | | | xxxxxx | | | 11.2 | | | 14.4 | | |
| LOS by Appr: | B | | | * | | | B | | | B | | |
| AllWayAvgQ: | 0.8 | 0.8 | 0.8 | 0.0 | 0.0 | 0.0 | 0.6 | 0.6 | 0.6 | 1.1 | 1.1 | 1.1 |

Note: Queue reported is the number of cars per lane.

Valle Verde Home Project
Existing+Ambient+Cumulative+Project (Proposed Project)
PM Peak Hour

Level Of Service Computation Report
2000 HCM 4-Way Stop Method (Future Volume Alternative)

Intersection #8 Via Senda at Las Palmas Dr

Cycle (sec): 100 | Critical Vol./Cap.(X): 0.481
Loss Time (sec): 0 (Y+R=4.0 sec) | Average Delay (sec/veh): 12.5
Optimal Cycle: 0 | Level Of Service: B

| Street Name: | Via Senda | | | | | | Las Palmas Dr | | | | | |
|---|---|---|---|---|---|---|---|---|---|---|---|---|
| Approach: | North Bound | | | South Bound | | | East Bound | | | West Bound | | |
| Movement: | L - | T - | R | L - | T - | R | L - | T - | R | L - | T - | R |
| Control: | Stop Sign | | | Stop Sign | | | Stop Sign | | | Stop Sign | | |
| Rights: | Include | | | Include | | | Include | | | Include | | |
| Min. Green: | 0 | 0 | 0 | 0 | 0 | 0 | 0 | 0 | 0 | 0 | 0 | 0 |
| Lanes: | 0 0 | 0 0 | 0 | 0 0 | 1! 0 | 0 | 0 1 | 0 0 | 0 | 0 0 | 1 0 | 1 |
| Volume Module: | | | | | | | | | | | | |
| Base Vol: | 0 | 0 | 0 | 226 | 0 | 27 | 27 | 274 | 0 | 0 | 271 | 270 |
| Growth Adj: | 1.02 | 1.02 | 1.02 | 1.02 | 1.02 | 1.02 | 1.02 | 1.02 | 1.02 | 1.02 | 1.02 | 1.02 |
| Initial Bse: | 0 | 0 | 0 | 231 | 0 | 28 | 28 | 279 | 0 | 0 | 276 | 275 |
| Added Vol: | 0 | 0 | 0 | 10 | 0 | 0 | 0 | 2 | 0 | 0 | 6 | 18 |
| PasserByVol: | 0 | 0 | 0 | 0 | 0 | 0 | 0 | 0 | 0 | 0 | 0 | 0 |
| Initial Fut: | 0 | 0 | 0 | 241 | 0 | 28 | 28 | 281 | 0 | 0 | 282 | 293 |
| User Adj: | 1.00 | 1.00 | 1.00 | 1.00 | 1.00 | 1.00 | 1.00 | 1.00 | 1.00 | 1.00 | 1.00 | 1.00 |
| PHF Adj: | 1.00 | 1.00 | 1.00 | 1.00 | 1.00 | 1.00 | 1.00 | 1.00 | 1.00 | 1.00 | 1.00 | 1.00 |
| PHF Volume: | 0 | 0 | 0 | 241 | 0 | 28 | 28 | 281 | 0 | 0 | 282 | 293 |
| Reduct Vol: | 0 | 0 | 0 | 0 | 0 | 0 | 0 | 0 | 0 | 0 | 0 | 0 |
| Reduced Vol: | 0 | 0 | 0 | 241 | 0 | 28 | 28 | 281 | 0 | 0 | 282 | 293 |
| PCE Adj: | 1.00 | 1.00 | 1.00 | 1.00 | 1.00 | 1.00 | 1.00 | 1.00 | 1.00 | 1.00 | 1.00 | 1.00 |
| MLF Adj: | 1.00 | 1.00 | 1.00 | 1.00 | 1.00 | 1.00 | 1.00 | 1.00 | 1.00 | 1.00 | 1.00 | 1.00 |
| FinalVolume: | 0 | 0 | 0 | 241 | 0 | 28 | 28 | 281 | 0 | 0 | 282 | 293 |
| Saturation Flow Module: | | | | | | | | | | | | |
| Adjustment: | 1.00 | 1.00 | 1.00 | 1.00 | 1.00 | 1.00 | 1.00 | 1.00 | 1.00 | 1.00 | 1.00 | 1.00 |
| Lanes: | 0.00 | 0.00 | 0.00 | 0.90 | 0.00 | 0.10 | 0.09 | 0.91 | 0.00 | 0.00 | 1.00 | 1.00 |
| Final Sat.: | 0 | 0 | 0 | 527 | 0 | 60 | 57 | 585 | 0 | 0 | 624 | 712 |
| Capacity Analysis Module: | | | | | | | | | | | | |
| Vol/Sat: | xxxx | xxxx | xxxx | 0.46 | xxxx | 0.46 | 0.48 | 0.48 | xxxx | xxxx | 0.45 | 0.41 |
| Crit Moves: | | | | **** | | | | **** | | | **** | |
| Delay/Veh: | 0.0 | 0.0 | 0.0 | 13.2 | 0.0 | 13.2 | 13.1 | 13.1 | 0.0 | 0.0 | 12.8 | 11.0 |
| Delay Adj: | 1.00 | 1.00 | 1.00 | 1.00 | 1.00 | 1.00 | 1.00 | 1.00 | 1.00 | 1.00 | 1.00 | 1.00 |
| AdjDel/Veh: | 0.0 | 0.0 | 0.0 | 13.2 | 0.0 | 13.2 | 13.1 | 13.1 | 0.0 | 0.0 | 12.8 | 11.0 |
| LOS by Move: | * | * | * | B | * | B | B | B | * | * | B | B |
| ApproachDel: | xxxxxx | | | 13.2 | | | 13.1 | | | 11.9 | | |
| Delay Adj: | xxxxx | | | 1.00 | | | 1.00 | | | 1.00 | | |
| ApprAdjDel: | xxxxxx | | | 13.2 | | | 13.1 | | | 11.9 | | |
| LOS by Appr: | * | | | B | | | B | | | B | | |
| AllWayAvgQ: | 0.0 | 0.0 | 0.0 | 0.7 | 0.7 | 0.7 | 0.8 | 0.8 | 0.8 | 0.0 | 0.8 | 0.7 |

Note: Queue reported is the number of cars per lane.

Traffix 7.9.0215 (c) 2008 Dowling Assoc. Licensed to MMA, LONG BEACH, CA

Valle Verde Home Project
Existing+Ambient+Cumulative+Project (Proposed Project)
PM Peak Hour

Level Of Service Computation Report
ICU 1(Loss as Cycle Length %) Method (Future Volume Alternative)

Intersection #9 Las Palmas/S La Cumbre Rd at US-101 SB Ramps

| | | | |
|---|---|---|---|
| Cycle (sec): | 100 | Critical Vol./Cap.(X): | 0.693 |
| Loss Time (sec): | 10 (Y+R=4.0 sec) | Average Delay (sec/veh): | xxxxxx |
| Optimal Cycle: | 49 | Level Of Service: | B |

| Approach: | North Bound | | | South Bound | | | East Bound | | | West Bound | | |
|---|---|---|---|---|---|---|---|---|---|---|---|---|
| Movement: | L - | T - | R | L - | T - | R | L - | T - | R | L - | T - | R |
| Control: | Protected | | | Protected | | | Protected | | | Protected | | |
| Rights: | Include | | | Include | | | Include | | | Include | | |
| Min. Green: | 0 | 0 | 0 | 0 | 0 | 0 | 0 | 0 | 0 | 0 | 0 | 0 |
| Lanes: | 0 0 | 2 0 | 1 | 2 0 | 1 0 | 0 | 1 1 | 0 0 | 1 | 0 0 | 0 0 | 0 |
| Volume Module: | | | | | | | | | | | | |
| Base Vol: | 0 | 314 | 144 | 599 | 385 | 0 | 604 | 1 | 75 | 0 | 0 | 0 |
| Growth Adj: | 1.02 | 1.02 | 1.02 | 1.02 | 1.02 | 1.02 | 1.02 | 1.02 | 1.02 | 1.02 | 1.02 | 1.02 |
| Initial Bse: | 0 | 320 | 147 | 611 | 393 | 0 | 616 | 1 | 77 | 0 | 0 | 0 |
| Added Vol: | 0 | 12 | 0 | 0 | 8 | 0 | 0 | 0 | 16 | 0 | 0 | 0 |
| PasserByVol: | 0 | 3 | 0 | 21 | 7 | 0 | 0 | 0 | 0 | 0 | 0 | 0 |
| Initial Fut: | 0 | 335 | 147 | 632 | 408 | 0 | 616 | 1 | 93 | 0 | 0 | 0 |
| User Adj: | 1.00 | 1.00 | 1.00 | 1.00 | 1.00 | 1.00 | 1.00 | 1.00 | 1.00 | 1.00 | 1.00 | 1.00 |
| PHF Adj: | 1.00 | 1.00 | 1.00 | 1.00 | 1.00 | 1.00 | 1.00 | 1.00 | 1.00 | 1.00 | 1.00 | 1.00 |
| PHF Volume: | 0 | 335 | 147 | 632 | 408 | 0 | 616 | 1 | 93 | 0 | 0 | 0 |
| Reduct Vol: | 0 | 0 | 0 | 0 | 0 | 0 | 0 | 0 | 0 | 0 | 0 | 0 |
| Reduced Vol: | 0 | 335 | 147 | 632 | 408 | 0 | 616 | 1 | 93 | 0 | 0 | 0 |
| PCE Adj: | 1.00 | 1.00 | 1.00 | 1.00 | 1.00 | 1.00 | 1.00 | 1.00 | 1.00 | 1.00 | 1.00 | 1.00 |
| MLF Adj: | 1.00 | 1.00 | 1.00 | 1.00 | 1.00 | 1.00 | 1.00 | 1.00 | 1.00 | 1.00 | 1.00 | 1.00 |
| FinalVolume: | 0 | 335 | 147 | 632 | 408 | 0 | 616 | 1 | 93 | 0 | 0 | 0 |
| Saturation Flow Module: | | | | | | | | | | | | |
| Sat/Lane: | 1600 | 1600 | 1600 | 1600 | 1600 | 1600 | 1600 | 1600 | 1600 | 1600 | 1600 | 1600 |
| Adjustment: | 1.00 | 1.00 | 1.00 | 0.80 | 1.00 | 1.00 | 0.80 | 1.00 | 1.00 | 1.00 | 1.00 | 1.00 |
| Lanes: | 0.00 | 2.00 | 1.00 | 2.00 | 1.00 | 0.00 | 1.99 | 0.01 | 1.00 | 0.00 | 0.00 | 0.00 |
| Final Sat.: | 0 | 3200 | 1600 | 2560 | 1600 | 0 | 2556 | 5 | 1600 | 0 | 0 | 0 |
| Capacity Analysis Module: | | | | | | | | | | | | |
| Vol/Sat: | 0.00 | 0.10 | 0.09 | 0.25 | 0.25 | 0.00 | 0.24 | 0.19 | 0.06 | 0.00 | 0.00 | 0.00 |
| Crit Moves: | | **** | | **** | | | **** | | | | | |

Valle Verde Home Project
Existing+Ambient+Cumulative+Project (Proposed Project)
PM Peak Hour

Scenario Report

| | |
|---|---|
| Scenario: | E+A+C+P Alt1 PM |
| Command: | E+A+C+P Alt1 PM |
| Volume: | E+A+C+P PM |
| Geometry: | Existing |
| Impact Fee: | Default Impact Fee |
| Trip Generation: | PM Peak |
| Trip Distribution: | Trip Distribution |
| Paths: | Default Path |
| Routes: | Default Route |
| Configuration: | E+A+C+P Alt1 PM |

Valle Verde Home Project
Existing+Ambient+Cumulative+Project (Proposed Project)
PM Peak Hour

Trip Generation Report

Forecast for PM Peak

| Zone # | Subzone | Amount | Units | Rate In | Rate Out | Trips In | Trips Out | Total Trips | % Of Total |
|---|---|---|---|---|---|---|---|---|---|
| 1 | 1235 Veronic | 1.00 | Residential | 44.00 | 21.00 | 44 | 21 | 65 | 11.3 |
| | Zone 1 Subtotal | | | | | 44 | 21 | 65 | 11.3 |
| 5 | 3820 State S | 1.00 | Office | 18.00 | 89.00 | 18 | 89 | 107 | 18.6 |
| | Zone 5 Subtotal | | | | | 18 | 89 | 107 | 18.6 |
| 6 | 900-1100 Las | 1.00 | Residential | 10.00 | 17.00 | 10 | 17 | 27 | 4.7 |
| | Zone 6 Subtotal | | | | | 10 | 17 | 27 | 4.7 |
| 12 | 215 Pesetas | 1.00 | Medical | 17.00 | 24.00 | 17 | 24 | 41 | 7.1 |
| | Zone 12 Subtotal | | | | | 17 | 24 | 41 | 7.1 |
| 13 | Elings Park | 1.00 | Park | 76.00 | 79.00 | 76 | 79 | 155 | 27.0 |
| | Zone 13 Subtotal | | | | | 76 | 79 | 155 | 27.0 |
| 14 | Cancer Cente | 1.00 | Medical Office | 47.00 | 120.00 | 47 | 120 | 167 | 29.1 |
| | Zone 14 Subtotal | | | | | 47 | 120 | 167 | 29.1 |
| 101 | Project (Val | 1.00 | Residential | 6.00 | 6.00 | 6 | 6 | 12 | 2.1 |
| | Zone 101 Subtotal | | | | | 6 | 6 | 12 | 2.1 |
| TOTAL | | | | | | 218 | 356 | 574 | 100.0 |

Valle Verde Home Project
Existing+Ambient+Cumulative+Project (Proposed Project)
PM Peak Hour

Trip Distribution Report

Percent Of Trips Distribution

| | To Gates | | | | | | | | | | |
|---|---|---|---|---|---|---|---|---|---|---|---|
| Zone | 1 | 2 | 3 | 4 | 5 | 6 | 7 | 8 | 9 | 10 | 11 |
| 1 | 10.0 | 5.0 | 30.0 | 30.0 | 5.0 | 5.0 | 0.0 | 15.0 | 0.0 | 0.0 | 0.0 |
| 5 | 0.0 | 0.0 | 40.0 | 30.0 | 0.0 | 0.0 | 2.5 | 2.5 | 5.0 | 15.0 | 5.0 |
| 6 | 10.0 | 5.0 | 30.0 | 30.0 | 5.0 | 5.0 | 0.0 | 15.0 | 0.0 | 0.0 | 0.0 |
| 12 | 0.0 | 0.0 | 40.0 | 30.0 | 0.0 | 0.0 | 2.5 | 2.5 | 5.0 | 15.0 | 5.0 |
| 13 | 10.0 | 5.0 | 30.0 | 30.0 | 5.0 | 5.0 | 5.0 | 10.0 | 0.0 | 0.0 | 0.0 |
| 14 | 0.0 | 10.0 | 35.0 | 25.0 | 0.0 | 0.0 | 3.0 | 2.0 | 10.0 | 15.0 | 0.0 |
| 101 | 5.0 | 5.0 | 40.0 | 30.0 | 5.0 | 0.0 | 0.0 | 10.0 | 0.0 | 5.0 | 0.0 |

Valle Verde Home Project
Existing+Ambient+Cumulative+Project (Proposed Project)
PM Peak Hour

Turning Movement Report
PM Peak

| Volume | Northbound | | | Southbound | | | Eastbound | | | Westbound | | | Total |
|---|---|---|---|---|---|---|---|---|---|---|---|---|---|
| Type | Left | Thru | Right | Left | Thru | Right | Left | Thru | Right | Left | Thru | Right | Volume |
| #6 Calle de los Amigos at Modoc Rd | | | | | | | | | | | | | |
| Base | 71 | 0 | 36 | 0 | 0 | 0 | 0 | 335 | 111 | 49 | 281 | 0 | 882 |
| Added | 10 | 0 | 1 | 0 | 0 | 0 | 0 | 20 | 5 | 1 | 6 | 0 | 43 |
| Total | 81 | 0 | 37 | 0 | 0 | 0 | 0 | 355 | 116 | 50 | 287 | 0 | 925 |
| #7 Via Senda at Modoc Rd | | | | | | | | | | | | | |
| Base | 100 | 0 | 210 | 0 | 0 | 0 | 0 | 192 | 71 | 181 | 183 | 0 | 936 |
| Added | 0 | 0 | 18 | 0 | 0 | 0 | 0 | 7 | 0 | 10 | 6 | 0 | 41 |
| Total | 100 | 0 | 228 | 0 | 0 | 0 | 0 | 199 | 71 | 191 | 189 | 0 | 977 |
| #8 Via Senda at Las Palmas Dr | | | | | | | | | | | | | |
| Base | 0 | 0 | 0 | 231 | 0 | 28 | 28 | 279 | 0 | 0 | 276 | 275 | 1117 |
| Added | 0 | 0 | 0 | 10 | 0 | 0 | 0 | 2 | 0 | 0 | 6 | 18 | 36 |
| Total | 0 | 0 | 0 | 241 | 0 | 28 | 28 | 281 | 0 | 0 | 282 | 293 | 1153 |
| #9 Las Palmas/S La Cumbre Rd at US-101 SB Ramps | | | | | | | | | | | | | |
| Base | 0 | 320 | 147 | 611 | 393 | 0 | 616 | 1 | 77 | 0 | 0 | 0 | 2164 |
| Added | 0 | 12 | 0 | 0 | 8 | 0 | 0 | 0 | 16 | 0 | 0 | 0 | 36 |
| PassBy | 0 | 3 | 0 | 21 | 7 | 0 | 0 | 0 | 0 | 0 | 0 | 0 | 31 |
| Total | 0 | 335 | 147 | 632 | 408 | 0 | 616 | 1 | 93 | 0 | 0 | 0 | 2231 |

Valle Verde Home Project
Existing+Ambient+Cumulative+Project (Proposed Project)
PM Peak Hour

Impact Analysis Report
Level Of Service

| Intersection | Base LOS | Base Del/ Veh | Base V/ C | Future LOS | Future Del/ Veh | Future V/ C | Change in |
|---|---|---|---|---|---|---|---|
| # 6 Calle de los Amigos at Modoc R | C | 15.2 | 0.000 | C | 16.2 | 0.000 | + 1.019 D/V |
| # 7 Via Senda at Modoc Rd | B | 12.2 | 0.535 | B | 12.8 | 0.567 | + 0.032 V/C |
| # 8 Via Senda at Las Palmas Dr | B | 12.2 | 0.471 | B | 12.5 | 0.481 | + 0.009 V/C |
| # 9 Las Palmas/S La Cumbre Rd at | C | 27.5 | 0.601 | C | 27.6 | 0.613 | + 0.045 D/V |

Traffix 7.9.0215 (c) 2008 Dowling Assoc. Licensed to MMA, LONG BEACH, CA

Valle Verde Home Project
Existing+Ambient+Cumulative+Project (Proposed Project)
PM Peak Hour

Level Of Service Computation Report
2000 HCM Unsignalized Method (Future Volume Alternative)

Intersection #6 Calle de los Amigos at Modoc Rd

Average Crit Del (sec/veh): 2.5 Worst Case Level Of Service: C[ 16.2]

| Street Name: | Calle de los Amigos | | | | | | | | | Modoc Rd | | | | | | | | |
|---|---|---|---|---|---|---|---|---|---|---|---|---|---|---|---|---|---|---|
| Approach: | North Bound | | | | | South Bound | | | | | East Bound | | | | | West Bound | | |
| Movement: | L | - | T | - | R | L | - | T | - | R | L | - | T | - | R | L | - | T | - | R |
| Control: | Stop Sign | | | | | Stop Sign | | | | | Uncontrolled | | | | | Uncontrolled | | | | |
| Rights: | Include | | | | | Include | | | | | Include | | | | | Include | | | | |
| Lanes: | 1 | 0 | 0 | 0 | 1 | 0 | 0 | 0 | 0 | 0 | 0 | 0 | 0 | 1 | 0 | 1 | 0 | 1 | 0 | 0 |
| Volume Module: | | | | | | | | | | | | | | | | | | | | |
| Base Vol: | 70 | | 0 | | 35 | 0 | | 0 | | 0 | 0 | | 328 | | 109 | 48 | | 275 | | 0 |
| Growth Adj: | 1.02 | 1.02 | | 1.02 | | 1.02 | 1.02 | | 1.02 | | 1.02 | 1.02 | | 1.02 | | 1.02 | 1.02 | | 1.02 | |
| Initial Bse: | 71 | | 0 | | 36 | 0 | | 0 | | 0 | 0 | | 335 | | 111 | 49 | | 281 | | 0 |
| Added Vol: | 10 | | 0 | | 1 | 0 | | 0 | | 0 | 0 | | 20 | | 5 | 1 | | 6 | | 0 |
| PasserByVol: | 0 | | 0 | | 0 | 0 | | 0 | | 0 | 0 | | 0 | | 0 | 0 | | 0 | | 0 |
| Initial Fut: | 81 | | 0 | | 37 | 0 | | 0 | | 0 | 0 | | 355 | | 116 | 50 | | 287 | | 0 |
| User Adj: | 1.00 | 1.00 | | 1.00 | | 1.00 | 1.00 | | 1.00 | | 1.00 | 1.00 | | 1.00 | | 1.00 | 1.00 | | 1.00 | |
| PHF Adj: | 1.00 | 1.00 | | 1.00 | | 1.00 | 1.00 | | 1.00 | | 1.00 | 1.00 | | 1.00 | | 1.00 | 1.00 | | 1.00 | |
| PHF Volume: | 81 | | 0 | | 37 | 0 | | 0 | | 0 | 0 | | 355 | | 116 | 50 | | 287 | | 0 |
| Reduct Vol: | 0 | | 0 | | 0 | 0 | | 0 | | 0 | 0 | | 0 | | 0 | 0 | | 0 | | 0 |
| FinalVolume: | 81 | | 0 | | 37 | 0 | | 0 | | 0 | 0 | | 355 | | 116 | 50 | | 287 | | 0 |
| Critical Gap Module: | | | | | | | | | | | | | | | | | | | | |
| Critical Gp: | 6.4 | xxxx | | 6.2 | xxxxx | xxxx | xxxxx | xxxxx | xxxx | xxxxx | | 4.1 | xxxx | xxxxx | | | | | | |
| FollowUpTim: | 3.5 | xxxx | | 3.3 | xxxxx | xxxx | xxxxx | xxxxx | xxxx | xxxxx | | 2.2 | xxxx | xxxxx | | | | | | |
| Capacity Module: | | | | | | | | | | | | | | | | | | | | |
| Cnflict Vol: | 799 | xxxx | | 413 | xxxx | xxxx | xxxxx | xxxx | xxxx | xxxxx | | 471 | xxxx | xxxxx | | | | | | |
| Potent Cap.: | 357 | xxxx | | 644 | xxxx | xxxx | xxxxx | xxxx | xxxx | xxxxx | | 1102 | xxxx | xxxxx | | | | | | |
| Move Cap.: | 345 | xxxx | | 644 | xxxx | xxxx | xxxxx | xxxx | xxxx | xxxxx | | 1102 | xxxx | xxxxx | | | | | | |
| Volume/Cap: | 0.24 | xxxx | | 0.06 | xxxx | xxxx | xxxx | xxxx | xxxx | xxxx | | 0.05 | xxxx | xxxx | | | | | | |
| Level Of Service Module: | | | | | | | | | | | | | | | | | | | | |
| 2Way95thQ: | 0.9 | xxxx | | 0.2 | xxxx | xxxx | xxxxx | xxxx | xxxx | xxxxx | | 0.1 | xxxx | xxxxx | | | | | | |
| Control Del: | 18.6 | xxxx | | 10.9 | xxxxx | xxxx | xxxxx | xxxxx | xxxx | xxxxx | | 8.4 | xxxx | xxxxx | | | | | | |
| LOS by Move: | C | * | | B | * | * | * | * | * | * | | A | * | * | | | | | | |
| Movement: | LT | - | LTR | - | RT | LT | - | LTR | - | RT | LT | - | LTR | - | RT | LT | - | LTR | - | RT |
| Shared Cap.: | xxxx | xxxx | | xxxxx | | xxxx | xxxx | | xxxxx | | xxxx | xxxx | | xxxxx | | xxxx | xxxx | | xxxxx | |
| SharedQueue: | xxxxx | xxxx | | xxxxx | | xxxxx | xxxx | | xxxxx | | xxxxx | xxxx | | xxxxx | | xxxxx | xxxx | | xxxxx | |
| Shrd ConDel: | xxxxx | xxxx | | xxxxx | | xxxxx | xxxx | | xxxxx | | xxxxx | xxxx | | xxxxx | | xxxxx | xxxx | | xxxxx | |
| Shared LOS: | * | * | | * | | * | * | | * | | * | * | | * | | * | * | | * | |
| ApproachDel: | | | 16.2 | | | | | xxxxxx | | | | | xxxxxx | | | | | xxxxxx | | |
| ApproachLOS: | | | C | | | | | * | | | | | * | | | | | * | | |

Note: Queue reported is the number of cars per lane.

Valle Verde Home Project
Existing+Ambient+Cumulative+Project (Proposed Project)
PM Peak Hour

Level Of Service Computation Report
2000 HCM 4-Way Stop Method (Future Volume Alternative)

Intersection #7 Via Senda at Modoc Rd

Cycle (sec): 100 | Critical Vol./Cap.(X): 0.567
Loss Time (sec): 0 (Y+R=4.0 sec) | Average Delay (sec/veh): 12.8
Optimal Cycle: 0 | Level Of Service: B

| Street Name: | Via Senda | | | | | | Modoc Rd | | | | | |
|---|---|---|---|---|---|---|---|---|---|---|---|---|
| Approach: | North Bound | | | South Bound | | | East Bound | | | West Bound | | |
| Movement: | L - | T - | R | L - | T - | R | L - | T - | R | L - | T - | R |
| Control: | Stop Sign | | | Stop Sign | | | Stop Sign | | | Stop Sign | | |
| Rights: | Include | | | Include | | | Include | | | Include | | |
| Min. Green: | 0 | 0 | 0 | 0 | 0 | 0 | 0 | 0 | 0 | 0 | 0 | 0 |
| Lanes: | 0 0 | 1! 0 | 0 | 0 0 | 0 0 | 0 | 0 0 | 0 1 | 0 | 0 1 | 0 0 | 0 |
| Volume Module: | | | | | | | | | | | | |
| Base Vol: | 98 | 0 | 206 | 0 | 0 | 0 | 0 | 188 | 70 | 177 | 179 | 0 |
| Growth Adj: | 1.02 | 1.02 | 1.02 | 1.02 | 1.02 | 1.02 | 1.02 | 1.02 | 1.02 | 1.02 | 1.02 | 1.02 |
| Initial Bse: | 100 | 0 | 210 | 0 | 0 | 0 | 0 | 192 | 71 | 181 | 183 | 0 |
| Added Vol: | 0 | 0 | 18 | 0 | 0 | 0 | 0 | 7 | 0 | 10 | 6 | 0 |
| PasserByVol: | 0 | 0 | 0 | 0 | 0 | 0 | 0 | 0 | 0 | 0 | 0 | 0 |
| Initial Fut: | 100 | 0 | 228 | 0 | 0 | 0 | 0 | 199 | 71 | 191 | 189 | 0 |
| User Adj: | 1.00 | 1.00 | 1.00 | 1.00 | 1.00 | 1.00 | 1.00 | 1.00 | 1.00 | 1.00 | 1.00 | 1.00 |
| PHF Adj: | 1.00 | 1.00 | 1.00 | 1.00 | 1.00 | 1.00 | 1.00 | 1.00 | 1.00 | 1.00 | 1.00 | 1.00 |
| PHF Volume: | 100 | 0 | 228 | 0 | 0 | 0 | 0 | 199 | 71 | 191 | 189 | 0 |
| Reduct Vol: | 0 | 0 | 0 | 0 | 0 | 0 | 0 | 0 | 0 | 0 | 0 | 0 |
| Reduced Vol: | 100 | 0 | 228 | 0 | 0 | 0 | 0 | 199 | 71 | 191 | 189 | 0 |
| PCE Adj: | 1.00 | 1.00 | 1.00 | 1.00 | 1.00 | 1.00 | 1.00 | 1.00 | 1.00 | 1.00 | 1.00 | 1.00 |
| MLF Adj: | 1.00 | 1.00 | 1.00 | 1.00 | 1.00 | 1.00 | 1.00 | 1.00 | 1.00 | 1.00 | 1.00 | 1.00 |
| FinalVolume: | 100 | 0 | 228 | 0 | 0 | 0 | 0 | 199 | 71 | 191 | 189 | 0 |
| Saturation Flow Module: | | | | | | | | | | | | |
| Adjustment: | 1.00 | 1.00 | 1.00 | 1.00 | 1.00 | 1.00 | 1.00 | 1.00 | 1.00 | 1.00 | 1.00 | 1.00 |
| Lanes: | 0.30 | 0.00 | 0.70 | 0.00 | 0.00 | 0.00 | 0.00 | 0.74 | 0.26 | 0.50 | 0.50 | 0.00 |
| Final Sat.: | 204 | 0 | 466 | 0 | 0 | 0 | 0 | 494 | 178 | 336 | 333 | 0 |
| Capacity Analysis Module: | | | | | | | | | | | | |
| Vol/Sat: | 0.49 | xxxx | 0.49 | xxxx | xxxx | xxxx | xxxx | 0.40 | 0.40 | 0.57 | 0.57 | xxxx |
| Crit Moves: | **** | | | | | | | **** | | | **** | |
| Delay/Veh: | 12.3 | 0.0 | 12.3 | 0.0 | 0.0 | 0.0 | 0.0 | 11.2 | 11.2 | 14.4 | 14.4 | 0.0 |
| Delay Adj: | 1.00 | 1.00 | 1.00 | 1.00 | 1.00 | 1.00 | 1.00 | 1.00 | 1.00 | 1.00 | 1.00 | 1.00 |
| AdjDel/Veh: | 12.3 | 0.0 | 12.3 | 0.0 | 0.0 | 0.0 | 0.0 | 11.2 | 11.2 | 14.4 | 14.4 | 0.0 |
| LOS by Move: | B | * | B | * | * | * | * | B | B | B | B | * |
| ApproachDel: | 12.3 | | | xxxxxx | | | 11.2 | | | 14.4 | | |
| Delay Adj: | 1.00 | | | xxxxx | | | 1.00 | | | 1.00 | | |
| ApprAdjDel: | 12.3 | | | xxxxxx | | | 11.2 | | | 14.4 | | |
| LOS by Appr: | B | | | * | | | B | | | B | | |
| AllWayAvgQ: | 0.8 | 0.8 | 0.8 | 0.0 | 0.0 | 0.0 | 0.6 | 0.6 | 0.6 | 1.1 | 1.1 | 1.1 |

Note: Queue reported is the number of cars per lane.

Valle Verde Home Project
Existing+Ambient+Cumulative+Project (Proposed Project)
PM Peak Hour

Level Of Service Computation Report
2000 HCM 4-Way Stop Method (Future Volume Alternative)

Intersection #8 Via Senda at Las Palmas Dr

Cycle (sec): 100 | Critical Vol./Cap.(X): 0.481
Loss Time (sec): 0 (Y+R=4.0 sec) | Average Delay (sec/veh): 12.5
Optimal Cycle: 0 | Level Of Service: B

| Street Name: | Via Senda | | | | | | Las Palmas Dr | | | | | |
|---|---|---|---|---|---|---|---|---|---|---|---|---|
| Approach: | North Bound | | | South Bound | | | East Bound | | | West Bound | | |
| Movement: | L - | T - | R | L - | T - | R | L - | T - | R | L - | T - | R |
| Control: | Stop Sign | | | Stop Sign | | | Stop Sign | | | Stop Sign | | |
| Rights: | Include | | | Include | | | Include | | | Include | | |
| Min. Green: | 0 | 0 | 0 | 0 | 0 | 0 | 0 | 0 | 0 | 0 | 0 | 0 |
| Lanes: | 0 0 | 0 0 | 0 | 0 0 | 1! 0 | 0 | 0 1 | 0 0 | 0 | 0 0 | 1 0 | 1 |
| Volume Module: | | | | | | | | | | | | |
| Base Vol: | 0 | 0 | 0 | 226 | 0 | 27 | 27 | 274 | 0 | 0 | 271 | 270 |
| Growth Adj: | 1.02 | 1.02 | 1.02 | 1.02 | 1.02 | 1.02 | 1.02 | 1.02 | 1.02 | 1.02 | 1.02 | 1.02 |
| Initial Bse: | 0 | 0 | 0 | 231 | 0 | 28 | 28 | 279 | 0 | 0 | 276 | 275 |
| Added Vol: | 0 | 0 | 0 | 10 | 0 | 0 | 0 | 2 | 0 | 0 | 6 | 18 |
| PasserByVol: | 0 | 0 | 0 | 0 | 0 | 0 | 0 | 0 | 0 | 0 | 0 | 0 |
| Initial Fut: | 0 | 0 | 0 | 241 | 0 | 28 | 28 | 281 | 0 | 0 | 282 | 293 |
| User Adj: | 1.00 | 1.00 | 1.00 | 1.00 | 1.00 | 1.00 | 1.00 | 1.00 | 1.00 | 1.00 | 1.00 | 1.00 |
| PHF Adj: | 1.00 | 1.00 | 1.00 | 1.00 | 1.00 | 1.00 | 1.00 | 1.00 | 1.00 | 1.00 | 1.00 | 1.00 |
| PHF Volume: | 0 | 0 | 0 | 241 | 0 | 28 | 28 | 281 | 0 | 0 | 282 | 293 |
| Reduct Vol: | 0 | 0 | 0 | 0 | 0 | 0 | 0 | 0 | 0 | 0 | 0 | 0 |
| Reduced Vol: | 0 | 0 | 0 | 241 | 0 | 28 | 28 | 281 | 0 | 0 | 282 | 293 |
| PCE Adj: | 1.00 | 1.00 | 1.00 | 1.00 | 1.00 | 1.00 | 1.00 | 1.00 | 1.00 | 1.00 | 1.00 | 1.00 |
| MLF Adj: | 1.00 | 1.00 | 1.00 | 1.00 | 1.00 | 1.00 | 1.00 | 1.00 | 1.00 | 1.00 | 1.00 | 1.00 |
| FinalVolume: | 0 | 0 | 0 | 241 | 0 | 28 | 28 | 281 | 0 | 0 | 282 | 293 |
| Saturation Flow Module: | | | | | | | | | | | | |
| Adjustment: | 1.00 | 1.00 | 1.00 | 1.00 | 1.00 | 1.00 | 1.00 | 1.00 | 1.00 | 1.00 | 1.00 | 1.00 |
| Lanes: | 0.00 | 0.00 | 0.00 | 0.90 | 0.00 | 0.10 | 0.09 | 0.91 | 0.00 | 0.00 | 1.00 | 1.00 |
| Final Sat.: | 0 | 0 | 0 | 527 | 0 | 60 | 57 | 585 | 0 | 0 | 624 | 712 |
| Capacity Analysis Module: | | | | | | | | | | | | |
| Vol/Sat: | xxxx | xxxx | xxxx | 0.46 | xxxx | 0.46 | 0.48 | 0.48 | xxxx | xxxx | 0.45 | 0.41 |
| Crit Moves: | | | | **** | | | | **** | | | **** | |
| Delay/Veh: | 0.0 | 0.0 | 0.0 | 13.2 | 0.0 | 13.2 | 13.1 | 13.1 | 0.0 | 0.0 | 12.8 | 11.0 |
| Delay Adj: | 1.00 | 1.00 | 1.00 | 1.00 | 1.00 | 1.00 | 1.00 | 1.00 | 1.00 | 1.00 | 1.00 | 1.00 |
| AdjDel/Veh: | 0.0 | 0.0 | 0.0 | 13.2 | 0.0 | 13.2 | 13.1 | 13.1 | 0.0 | 0.0 | 12.8 | 11.0 |
| LOS by Move: | * | * | * | B | * | B | B | B | * | * | B | B |
| ApproachDel: | xxxxxx | | | 13.2 | | | 13.1 | | | 11.9 | | |
| Delay Adj: | xxxxx | | | 1.00 | | | 1.00 | | | 1.00 | | |
| ApprAdjDel: | xxxxxx | | | 13.2 | | | 13.1 | | | 11.9 | | |
| LOS by Appr: | * | | | B | | | B | | | B | | |
| AllWayAvgQ: | 0.0 | 0.0 | 0.0 | 0.7 | 0.7 | 0.7 | 0.8 | 0.8 | 0.8 | 0.0 | 0.8 | 0.7 |

Note: Queue reported is the number of cars per lane.

Traffix 7.9.0215 (c) 2008 Dowling Assoc. Licensed to MMA, LONG BEACH, CA

Valle Verde Home Project
Existing+Ambient+Cumulative+Project (Proposed Project)
PM Peak Hour

Level Of Service Computation Report
2000 HCM Operations Method (Future Volume Alternative)

Intersection #9 Las Palmas/S La Cumbre Rd at US-101 SB Ramps

Cycle (sec): 100 Critical Vol./Cap.(X): 0.613
Loss Time (sec): 10 (Y+R=4.0 sec) Average Delay (sec/veh): 27.6
Optimal Cycle: 45 Level Of Service: C

| Approach: | North Bound | | | South Bound | | | East Bound | | | West Bound | | |
|---|---|---|---|---|---|---|---|---|---|---|---|---|
| Movement: | L - | T - | R | L - | T - | R | L - | T - | R | L - | T - | R |
| Control: | Protected | | | Protected | | | Protected | | | Protected | | |
| Rights: | Include | | | Include | | | Include | | | Include | | |
| Min. Green: | 0 | 0 | 0 | 0 | 0 | 0 | 0 | 0 | 0 | 0 | 0 | 0 |
| Lanes: | 0 0 | 2 0 | 1 | 2 0 | 1 0 | 0 | 1 1 | 0 0 | 1 | 0 0 | 0 0 | 0 |
| Volume Module: | | | | | | | | | | | | |
| Base Vol: | 0 | 314 | 144 | 599 | 385 | 0 | 604 | 1 | 75 | 0 | 0 | 0 |
| Growth Adj: | 1.02 | 1.02 | 1.02 | 1.02 | 1.02 | 1.02 | 1.02 | 1.02 | 1.02 | 1.02 | 1.02 | 1.02 |
| Initial Bse: | 0 | 320 | 147 | 611 | 393 | 0 | 616 | 1 | 77 | 0 | 0 | 0 |
| Added Vol: | 0 | 12 | 0 | 0 | 8 | 0 | 0 | 0 | 16 | 0 | 0 | 0 |
| PasserByVol: | 0 | 3 | 0 | 21 | 7 | 0 | 0 | 0 | 0 | 0 | 0 | 0 |
| Initial Fut: | 0 | 335 | 147 | 632 | 408 | 0 | 616 | 1 | 93 | 0 | 0 | 0 |
| User Adj: | 1.00 | 1.00 | 1.00 | 1.00 | 1.00 | 1.00 | 1.00 | 1.00 | 1.00 | 1.00 | 1.00 | 1.00 |
| PHF Adj: | 1.00 | 1.00 | 1.00 | 1.00 | 1.00 | 1.00 | 1.00 | 1.00 | 1.00 | 1.00 | 1.00 | 1.00 |
| PHF Volume: | 0 | 335 | 147 | 632 | 408 | 0 | 616 | 1 | 93 | 0 | 0 | 0 |
| Reduct Vol: | 0 | 0 | 0 | 0 | 0 | 0 | 0 | 0 | 0 | 0 | 0 | 0 |
| Reduced Vol: | 0 | 335 | 147 | 632 | 408 | 0 | 616 | 1 | 93 | 0 | 0 | 0 |
| PCE Adj: | 1.00 | 1.00 | 1.00 | 1.00 | 1.00 | 1.00 | 1.00 | 1.00 | 1.00 | 1.00 | 1.00 | 1.00 |
| MLF Adj: | 1.00 | 1.00 | 1.00 | 1.00 | 1.00 | 1.00 | 1.00 | 1.00 | 1.00 | 1.00 | 1.00 | 1.00 |
| FinalVolume: | 0 | 335 | 147 | 632 | 408 | 0 | 616 | 1 | 93 | 0 | 0 | 0 |
| Saturation Flow Module: | | | | | | | | | | | | |
| Sat/Lane: | 1900 | 1900 | 1900 | 1900 | 1900 | 1900 | 1900 | 1900 | 1900 | 1900 | 1900 | 1900 |
| Adjustment: | 1.00 | 0.95 | 0.85 | 0.74 | 1.00 | 1.00 | 0.70 | 0.87 | 0.85 | 1.00 | 1.00 | 1.00 |
| Lanes: | 0.00 | 2.00 | 1.00 | 2.00 | 1.00 | 0.00 | 1.99 | 0.01 | 1.00 | 0.00 | 0.00 | 0.00 |
| Final Sat.: | 0 | 3610 | 1615 | 2801 | 1900 | 0 | 2641 | 4 | 1615 | 0 | 0 | 0 |
| Capacity Analysis Module: | | | | | | | | | | | | |
| Vol/Sat: | 0.00 | 0.09 | 0.09 | 0.23 | 0.21 | 0.00 | 0.23 | 0.23 | 0.06 | 0.00 | 0.00 | 0.00 |
| Crit Moves: | | **** | | **** | | | **** | | | | | |
| Green/Cycle: | 0.00 | 0.15 | 0.15 | 0.37 | 0.52 | 0.00 | 0.38 | 0.38 | 0.38 | 0.00 | 0.00 | 0.00 |
| Volume/Cap: | 0.00 | 0.61 | 0.60 | 0.61 | 0.41 | 0.00 | 0.61 | 0.61 | 0.15 | 0.00 | 0.00 | 0.00 |
| Delay/Veh: | 0.0 | 41.7 | 43.7 | 26.9 | 15.0 | 0.0 | 26.2 | 26.2 | 20.5 | 0.0 | 0.0 | 0.0 |
| User DelAdj: | 1.00 | 1.00 | 1.00 | 1.00 | 1.00 | 1.00 | 1.00 | 1.00 | 1.00 | 1.00 | 1.00 | 1.00 |
| AdjDel/Veh: | 0.0 | 41.7 | 43.7 | 26.9 | 15.0 | 0.0 | 26.2 | 26.2 | 20.5 | 0.0 | 0.0 | 0.0 |
| LOS by Move: | A | D | D | C | B | A | C | C | C | A | A | A |
| HCM2kAvgQ: | 0 | 6 | 5 | 9 | 8 | 0 | 8 | 10 | 2 | 0 | 0 | 0 |

Note: Queue reported is the number of cars per lane.

# CUMULATIVE PROJECT WITH CUP BUILDOUT
# LOS WORKSHEETS

# WEEKDAY AM PEAK HOUR

Valle Verde Home Project
Existing+Ambient+Cumulative+Project (CUP Buildout)
AM Peak Hour

Scenario Report

| | |
|---|---|
| Scenario: | E+A+C+P Alt2 AM |
| Command: | E+A+C+P Alt2 AM |
| Volume: | E+A+C+P AM |
| Geometry: | Existing |
| Impact Fee: | Default Impact Fee |
| Trip Generation: | AM Peak |
| Trip Distribution: | Trip Distribution |
| Paths: | Default Path |
| Routes: | Default Route |
| Configuration: | E+A+C+P Alt2 AM |

Valle Verde Home Project
Existing+Ambient+Cumulative+Project (CUP Buildout)
AM Peak Hour

Trip Generation Report

Forecast for AM Peak

| Zone # | Subzone | Amount | Units | Rate In | Rate Out | Trips In | Trips Out | Total Trips | % Of Total |
|---|---|---|---|---|---|---|---|---|---|
| 1 | 1235 Veronic | 1.00 | Residential | 9.00 | 46.00 | 9 | 46 | 55 | 13.2 |
| | Zone 1 Subtotal | | | | | 9 | 46 | 55 | 13.2 |
| 5 | 3820 State S | 1.00 | Office | 98.00 | 13.00 | 98 | 13 | 111 | 26.6 |
| | Zone 5 Subtotal | | | | | 98 | 13 | 111 | 26.6 |
| 6 | 900-1100 Las | 1.00 | Residential | 6.00 | 15.00 | 6 | 15 | 21 | 5.0 |
| | Zone 6 Subtotal | | | | | 6 | 15 | 21 | 5.0 |
| 12 | 215 Pesetas | 1.00 | Medical | 24.00 | 17.00 | 24 | 17 | 41 | 9.8 |
| | Zone 12 Subtotal | | | | | 24 | 17 | 41 | 9.8 |
| 13 | Elings Park | 1.00 | Park | 65.00 | 4.00 | 65 | 4 | 69 | 16.5 |
| | Zone 13 Subtotal | | | | | 65 | 4 | 69 | 16.5 |
| 14 | Cancer Cente | 1.00 | Medical Office | 89.00 | 25.00 | 89 | 25 | 114 | 27.3 |
| | Zone 14 Subtotal | | | | | 89 | 25 | 114 | 27.3 |
| 102 | Project (Val | 1.00 | Residential | 3.00 | 3.00 | 3 | 3 | 6 | 1.4 |
| | Zone 102 Subtotal | | | | | 3 | 3 | 6 | 1.4 |
| TOTAL | | | | | | 294 | 123 | 417 | 100.0 |

Valle Verde Home Project
Existing+Ambient+Cumulative+Project (CUP Buildout)
AM Peak Hour

Trip Distribution Report

Percent Of Trips Distribution

| | To Gates | | | | | | | | | | |
|---|---|---|---|---|---|---|---|---|---|---|---|
| Zone | 1 | 2 | 3 | 4 | 5 | 6 | 7 | 8 | 9 | 10 | 11 |
| 1 | 10.0 | 5.0 | 30.0 | 30.0 | 5.0 | 5.0 | 0.0 | 15.0 | 0.0 | 0.0 | 0.0 |
| 5 | 0.0 | 0.0 | 40.0 | 30.0 | 0.0 | 0.0 | 2.5 | 2.5 | 5.0 | 15.0 | 5.0 |
| 6 | 10.0 | 5.0 | 30.0 | 30.0 | 5.0 | 5.0 | 0.0 | 15.0 | 0.0 | 0.0 | 0.0 |
| 12 | 0.0 | 0.0 | 40.0 | 30.0 | 0.0 | 0.0 | 2.5 | 2.5 | 5.0 | 15.0 | 5.0 |
| 13 | 10.0 | 5.0 | 30.0 | 30.0 | 5.0 | 5.0 | 5.0 | 10.0 | 0.0 | 0.0 | 0.0 |
| 14 | 0.0 | 10.0 | 35.0 | 25.0 | 0.0 | 0.0 | 3.0 | 2.0 | 10.0 | 15.0 | 0.0 |
| 102 | 5.0 | 5.0 | 40.0 | 30.0 | 5.0 | 0.0 | 0.0 | 10.0 | 0.0 | 5.0 | 0.0 |

Valle Verde Home Project
Existing+Ambient+Cumulative+Project (CUP Buildout)
AM Peak Hour

Turning Movement Report
AM Peak

| Volume | Northbound | | | Southbound | | | Eastbound | | | Westbound | | | Total |
|---|---|---|---|---|---|---|---|---|---|---|---|---|---|
| Type | Left | Thru | Right | Left | Thru | Right | Left | Thru | Right | Left | Thru | Right | Volume |
| #6 Calle de los Amigos at Modoc Rd | | | | | | | | | | | | | |
| Base | 98 | 0 | 46 | 0 | 0 | 0 | 0 | 198 | 53 | 19 | 312 | 0 | 726 |
| Added | 18 | 0 | 1 | 0 | 0 | 0 | 0 | 7 | 2 | 1 | 3 | 0 | 32 |
| Total | 116 | 0 | 47 | 0 | 0 | 0 | 0 | 205 | 55 | 20 | 315 | 0 | 758 |
| #7 Via Senda at Modoc Rd | | | | | | | | | | | | | |
| Base | 38 | 0 | 139 | 0 | 0 | 0 | 0 | 118 | 96 | 179 | 134 | 0 | 703 |
| Added | 0 | 0 | 5 | 0 | 0 | 0 | 0 | 4 | 0 | 17 | 3 | 0 | 29 |
| Total | 38 | 0 | 144 | 0 | 0 | 0 | 0 | 122 | 96 | 196 | 137 | 0 | 732 |
| #8 Via Senda at Las Palmas Dr | | | | | | | | | | | | | |
| Base | 0 | 0 | 0 | 242 | 0 | 35 | 27 | 289 | 0 | 0 | 344 | 149 | 1084 |
| Added | 0 | 0 | 0 | 17 | 0 | 0 | 0 | 6 | 0 | 0 | 2 | 5 | 30 |
| Total | 0 | 0 | 0 | 259 | 0 | 35 | 27 | 295 | 0 | 0 | 346 | 154 | 1114 |
| #9 Las Palmas/S La Cumbre Rd at US-101 SB Ramps | | | | | | | | | | | | | |
| Base | 0 | 430 | 244 | 458 | 393 | 0 | 467 | 5 | 112 | 0 | 0 | 0 | 2109 |
| Added | 0 | 24 | 0 | 0 | 2 | 0 | 0 | 0 | 4 | 0 | 0 | 0 | 30 |
| PassBy | 0 | 4 | 0 | 3 | 1 | 0 | 0 | 0 | 0 | 0 | 0 | 0 | 8 |
| Total | 0 | 458 | 244 | 461 | 396 | 0 | 467 | 5 | 116 | 0 | 0 | 0 | 2147 |

Valle Verde Home Project
Existing+Ambient+Cumulative+Project (CUP Buildout)
AM Peak Hour

Impact Analysis Report
Level Of Service

| Intersection | Base LOS | Base Del/ Veh | Base V/ C | Future LOS | Future Del/ Veh | Future V/ C | Change in |
|---|---|---|---|---|---|---|---|
| # 6 Calle de los Amigos at Modoc R | B | 12.9 | 0.000 | B | 13.6 | 0.000 | + 0.668 D/V |
| # 7 Via Senda at Modoc Rd | A | 9.7 | 0.415 | B | 10.0 | 0.444 | + 0.029 V/C |
| # 8 Via Senda at Las Palmas Dr | B | 13.2 | 0.554 | B | 13.6 | 0.565 | + 0.011 V/C |
| # 9 Las Palmas/S La Cumbre Rd at | B | xxxxx | 0.616 | B | xxxxx | 0.617 | + 0.001 V/C |

Traffix 7.9.0215 (c) 2008 Dowling Assoc. Licensed to MMA, LONG BEACH, CA

Valle Verde Home Project
Existing+Ambient+Cumulative+Project (CUP Buildout)
AM Peak Hour

Level Of Service Computation Report
2000 HCM Unsignalized Method (Future Volume Alternative)

Intersection #6 Calle de los Amigos at Modoc Rd

Average Delay (sec/veh): 3.1  Worst Case Level Of Service: B[ 13.6]

| Street Name: | Calle de los Amigos | | | | | | Modoc Rd | | | | | |
|---|---|---|---|---|---|---|---|---|---|---|---|---|
| Approach: | North Bound | | | South Bound | | | East Bound | | | West Bound | | |
| Movement: | L - T - R | | | L - T - R | | | L - T - R | | | L - T - R | | |
| Control: | Stop Sign | | | Stop Sign | | | Uncontrolled | | | Uncontrolled | | |
| Rights: | Include | | | Include | | | Include | | | Include | | |
| Lanes: | 1 0 0 0 1 | | | 0 0 0 0 0 | | | 0 0 0 1 0 | | | 1 0 1 0 0 | | |
| Volume Module: | | | | | | | | | | | | |
| Base Vol: | 96 | 0 | 45 | 0 | 0 | 0 | 0 | 194 | 52 | 19 | 306 | 0 |
| Growth Adj: | 1.02 | 1.02 | 1.02 | 1.02 | 1.02 | 1.02 | 1.02 | 1.02 | 1.02 | 1.02 | 1.02 | 1.02 |
| Initial Bse: | 98 | 0 | 46 | 0 | 0 | 0 | 0 | 198 | 53 | 19 | 312 | 0 |
| Added Vol: | 18 | 0 | 1 | 0 | 0 | 0 | 0 | 7 | 2 | 1 | 3 | 0 |
| PasserByVol: | 0 | 0 | 0 | 0 | 0 | 0 | 0 | 0 | 0 | 0 | 0 | 0 |
| Initial Fut: | 116 | 0 | 47 | 0 | 0 | 0 | 0 | 205 | 55 | 20 | 315 | 0 |
| User Adj: | 1.00 | 1.00 | 1.00 | 1.00 | 1.00 | 1.00 | 1.00 | 1.00 | 1.00 | 1.00 | 1.00 | 1.00 |
| PHF Adj: | 1.00 | 1.00 | 1.00 | 1.00 | 1.00 | 1.00 | 1.00 | 1.00 | 1.00 | 1.00 | 1.00 | 1.00 |
| PHF Volume: | 116 | 0 | 47 | 0 | 0 | 0 | 0 | 205 | 55 | 20 | 315 | 0 |
| Reduct Vol: | 0 | 0 | 0 | 0 | 0 | 0 | 0 | 0 | 0 | 0 | 0 | 0 |
| FinalVolume: | 116 | 0 | 47 | 0 | 0 | 0 | 0 | 205 | 55 | 20 | 315 | 0 |
| Critical Gap Module: | | | | | | | | | | | | |
| Critical Gp: | 6.4 | xxxx | 6.2 | xxxxx | xxxx | xxxxx | xxxxx | xxxx | xxxxx | 4.1 | xxxx | xxxxx |
| FollowUpTim: | 3.5 | xxxx | 3.3 | xxxxx | xxxx | xxxxx | xxxxx | xxxx | xxxxx | 2.2 | xxxx | xxxxx |
| Capacity Module: | | | | | | | | | | | | |
| Cnflict Vol: | 588 | xxxx | 232 | xxxx | xxxx | xxxxx | xxxx | xxxx | xxxxx | 260 | xxxx | xxxxx |
| Potent Cap.: | 475 | xxxx | 812 | xxxx | xxxx | xxxxx | xxxx | xxxx | xxxxx | 1316 | xxxx | xxxxx |
| Move Cap.: | 469 | xxxx | 812 | xxxx | xxxx | xxxxx | xxxx | xxxx | xxxxx | 1316 | xxxx | xxxxx |
| Volume/Cap: | 0.25 | xxxx | 0.06 | xxxx | xxxx | xxxx | xxxx | xxxx | xxxx | 0.02 | xxxx | xxxx |
| Level Of Service Module: | | | | | | | | | | | | |
| 2Way95thQ: | 1.0 | xxxx | 0.2 | xxxx | xxxx | xxxxx | xxxx | xxxx | xxxxx | 0.0 | xxxx | xxxxx |
| Control Del: | 15.2 | xxxx | 9.7 | xxxxx | xxxx | xxxxx | xxxxx | xxxx | xxxxx | 7.8 | xxxx | xxxxx |
| LOS by Move: | C | * | A | * | * | * | * | * | * | A | * | * |
| Movement: | LT - LTR - RT | | | LT - LTR - RT | | | LT - LTR - RT | | | LT - LTR - RT | | |
| Shared Cap.: | xxxx | xxxx | xxxxx | xxxx | xxxx | xxxxx | xxxx | xxxx | xxxxx | xxxx | xxxx | xxxxx |
| SharedQueue: | xxxxx | xxxx | xxxxx | xxxxx | xxxx | xxxxx | xxxxx | xxxx | xxxxx | xxxxx | xxxx | xxxxx |
| Shrd ConDel: | xxxxx | xxxx | xxxxx | xxxxx | xxxx | xxxxx | xxxxx | xxxx | xxxxx | xxxxx | xxxx | xxxxx |
| Shared LOS: | * | * | * | * | * | * | * | * | * | * | * | * |
| ApproachDel: | 13.6 | | | xxxxxx | | | xxxxxx | | | xxxxxx | | |
| ApproachLOS: | B | | | * | | | * | | | * | | |

Note: Queue reported is the number of cars per lane.

Valle Verde Home Project
Existing+Ambient+Cumulative+Project (CUP Buildout)
AM Peak Hour

Level Of Service Computation Report
2000 HCM 4-Way Stop Method (Future Volume Alternative)

Intersection #7 Via Senda at Modoc Rd

Cycle (sec): 100 | Critical Vol./Cap.(X): 0.444
Loss Time (sec): 0 (Y+R=4.0 sec) | Average Delay (sec/veh): 10.0
Optimal Cycle: 0 | Level Of Service: B

| Street Name: | Via Senda | | | | | | Modoc Rd | | | | | |
|---|---|---|---|---|---|---|---|---|---|---|---|---|
| Approach: | North Bound | | | South Bound | | | East Bound | | | West Bound | | |
| Movement: | L - | T - | R | L - | T - | R | L - | T - | R | L - | T - | R |
| Control: | Stop Sign | | | Stop Sign | | | Stop Sign | | | Stop Sign | | |
| Rights: | Include | | | Include | | | Include | | | Include | | |
| Min. Green: | 0 | 0 | 0 | 0 | 0 | 0 | 0 | 0 | 0 | 0 | 0 | 0 |
| Lanes: | 0 0 | 1! 0 | 0 | 0 0 | 0 0 | 0 | 0 0 | 0 1 | 0 | 0 1 | 0 0 | 0 |
| Volume Module: | | | | | | | | | | | | |
| Base Vol: | 37 | 0 | 136 | 0 | 0 | 0 | 0 | 116 | 94 | 175 | 131 | 0 |
| Growth Adj: | 1.02 | 1.02 | 1.02 | 1.02 | 1.02 | 1.02 | 1.02 | 1.02 | 1.02 | 1.02 | 1.02 | 1.02 |
| Initial Bse: | 38 | 0 | 139 | 0 | 0 | 0 | 0 | 118 | 96 | 179 | 134 | 0 |
| Added Vol: | 0 | 0 | 5 | 0 | 0 | 0 | 0 | 4 | 0 | 17 | 3 | 0 |
| PasserByVol: | 0 | 0 | 0 | 0 | 0 | 0 | 0 | 0 | 0 | 0 | 0 | 0 |
| Initial Fut: | 38 | 0 | 144 | 0 | 0 | 0 | 0 | 122 | 96 | 196 | 137 | 0 |
| User Adj: | 1.00 | 1.00 | 1.00 | 1.00 | 1.00 | 1.00 | 1.00 | 1.00 | 1.00 | 1.00 | 1.00 | 1.00 |
| PHF Adj: | 1.00 | 1.00 | 1.00 | 1.00 | 1.00 | 1.00 | 1.00 | 1.00 | 1.00 | 1.00 | 1.00 | 1.00 |
| PHF Volume: | 38 | 0 | 144 | 0 | 0 | 0 | 0 | 122 | 96 | 196 | 137 | 0 |
| Reduct Vol: | 0 | 0 | 0 | 0 | 0 | 0 | 0 | 0 | 0 | 0 | 0 | 0 |
| Reduced Vol: | 38 | 0 | 144 | 0 | 0 | 0 | 0 | 122 | 96 | 196 | 137 | 0 |
| PCE Adj: | 1.00 | 1.00 | 1.00 | 1.00 | 1.00 | 1.00 | 1.00 | 1.00 | 1.00 | 1.00 | 1.00 | 1.00 |
| MLF Adj: | 1.00 | 1.00 | 1.00 | 1.00 | 1.00 | 1.00 | 1.00 | 1.00 | 1.00 | 1.00 | 1.00 | 1.00 |
| FinalVolume: | 38 | 0 | 144 | 0 | 0 | 0 | 0 | 122 | 96 | 196 | 137 | 0 |
| Saturation Flow Module: | | | | | | | | | | | | |
| Adjustment: | 1.00 | 1.00 | 1.00 | 1.00 | 1.00 | 1.00 | 1.00 | 1.00 | 1.00 | 1.00 | 1.00 | 1.00 |
| Lanes: | 0.20 | 0.01 | 0.79 | 0.00 | 0.00 | 0.00 | 0.00 | 0.56 | 0.44 | 0.59 | 0.41 | 0.00 |
| Final Sat.: | 149 | 0 | 568 | 0 | 0 | 0 | 0 | 437 | 342 | 441 | 308 | 0 |
| Capacity Analysis Module: | | | | | | | | | | | | |
| Vol/Sat: | 0.25 | 0.00 | 0.25 | xxxx | xxxx | xxxx | xxxx | 0.28 | 0.28 | 0.44 | 0.44 | xxxx |
| Crit Moves: | **** | | | | | | | **** | | | **** | |
| Delay/Veh: | 9.1 | 9.1 | 9.1 | 0.0 | 0.0 | 0.0 | 0.0 | 9.1 | 9.1 | 11.2 | 11.2 | 0.0 |
| Delay Adj: | 1.00 | 1.00 | 1.00 | 1.00 | 1.00 | 1.00 | 1.00 | 1.00 | 1.00 | 1.00 | 1.00 | 1.00 |
| AdjDel/Veh: | 9.1 | 9.1 | 9.1 | 0.0 | 0.0 | 0.0 | 0.0 | 9.1 | 9.1 | 11.2 | 11.2 | 0.0 |
| LOS by Move: | A | A | A | * | * | * | * | A | A | B | B | * |
| ApproachDel: | 9.1 | | | xxxxxx | | | | 9.1 | | | 11.2 | |
| Delay Adj: | 1.00 | | | xxxxx | | | | 1.00 | | | 1.00 | |
| ApprAdjDel: | 9.1 | | | xxxxxx | | | | 9.1 | | | 11.2 | |
| LOS by Appr: | A | | | * | | | | A | | | B | |
| AllWayAvgQ: | 0.3 | 0.3 | 0.3 | 0.0 | 0.0 | 0.0 | 0.4 | 0.4 | 0.4 | 0.7 | 0.7 | 0.7 |

Note: Queue reported is the number of cars per lane.

Valle Verde Home Project
Existing+Ambient+Cumulative+Project (CUP Buildout)
AM Peak Hour

Level Of Service Computation Report
2000 HCM 4-Way Stop Method (Future Volume Alternative)

Intersection #8 Via Senda at Las Palmas Dr

Cycle (sec): 100 | Critical Vol./Cap.(X): 0.565
Loss Time (sec): 0 (Y+R=4.0 sec) | Average Delay (sec/veh): 13.6
Optimal Cycle: 0 | Level Of Service: B

| Street Name: | Via Senda | | | | | | Las Palmas Dr | | | | | |
|---|---|---|---|---|---|---|---|---|---|---|---|---|
| Approach: | North Bound | | | South Bound | | | East Bound | | | West Bound | | |
| Movement: | L - | T - | R | L - | T - | R | L - | T - | R | L - | T - | R |
| Control: | Stop Sign | | | Stop Sign | | | Stop Sign | | | Stop Sign | | |
| Rights: | Include | | | Include | | | Include | | | Include | | |
| Min. Green: | 0 | 0 | 0 | 0 | 0 | 0 | 0 | 0 | 0 | 0 | 0 | 0 |
| Lanes: | 0 0 | 0 0 | 0 | 0 0 | 1! 0 | 0 | 0 1 | 0 0 | 0 | 0 0 | 1 0 | 1 |
| Volume Module: | | | | | | | | | | | | |
| Base Vol: | 0 | 0 | 0 | 237 | 0 | 34 | 26 | 283 | 0 | 0 | 337 | 146 |
| Growth Adj: | 1.02 | 1.02 | 1.02 | 1.02 | 1.02 | 1.02 | 1.02 | 1.02 | 1.02 | 1.02 | 1.02 | 1.02 |
| Initial Bse: | 0 | 0 | 0 | 242 | 0 | 35 | 27 | 289 | 0 | 0 | 344 | 149 |
| Added Vol: | 0 | 0 | 0 | 17 | 0 | 0 | 0 | 6 | 0 | 0 | 2 | 5 |
| PasserByVol: | 0 | 0 | 0 | 0 | 0 | 0 | 0 | 0 | 0 | 0 | 0 | 0 |
| Initial Fut: | 0 | 0 | 0 | 259 | 0 | 35 | 27 | 295 | 0 | 0 | 346 | 154 |
| User Adj: | 1.00 | 1.00 | 1.00 | 1.00 | 1.00 | 1.00 | 1.00 | 1.00 | 1.00 | 1.00 | 1.00 | 1.00 |
| PHF Adj: | 1.00 | 1.00 | 1.00 | 1.00 | 1.00 | 1.00 | 1.00 | 1.00 | 1.00 | 1.00 | 1.00 | 1.00 |
| PHF Volume: | 0 | 0 | 0 | 259 | 0 | 35 | 27 | 295 | 0 | 0 | 346 | 154 |
| Reduct Vol: | 0 | 0 | 0 | 0 | 0 | 0 | 0 | 0 | 0 | 0 | 0 | 0 |
| Reduced Vol: | 0 | 0 | 0 | 259 | 0 | 35 | 27 | 295 | 0 | 0 | 346 | 154 |
| PCE Adj: | 1.00 | 1.00 | 1.00 | 1.00 | 1.00 | 1.00 | 1.00 | 1.00 | 1.00 | 1.00 | 1.00 | 1.00 |
| MLF Adj: | 1.00 | 1.00 | 1.00 | 1.00 | 1.00 | 1.00 | 1.00 | 1.00 | 1.00 | 1.00 | 1.00 | 1.00 |
| FinalVolume: | 0 | 0 | 0 | 259 | 0 | 35 | 27 | 295 | 0 | 0 | 346 | 154 |
| Saturation Flow Module: | | | | | | | | | | | | |
| Adjustment: | 1.00 | 1.00 | 1.00 | 1.00 | 1.00 | 1.00 | 1.00 | 1.00 | 1.00 | 1.00 | 1.00 | 1.00 |
| Lanes: | 0.00 | 0.00 | 0.00 | 0.88 | 0.00 | 0.12 | 0.08 | 0.92 | 0.00 | 0.00 | 1.00 | 1.00 |
| Final Sat.: | 0 | 0 | 0 | 520 | 0 | 70 | 52 | 582 | 0 | 0 | 612 | 694 |
| Capacity Analysis Module: | | | | | | | | | | | | |
| Vol/Sat: | xxxx | xxxx | xxxx | 0.50 | xxxx | 0.50 | 0.51 | 0.51 | xxxx | xxxx | 0.56 | 0.22 |
| Crit Moves: | | | | | | **** | | **** | | | **** | |
| Delay/Veh: | 0.0 | 0.0 | 0.0 | 14.0 | 0.0 | 14.0 | 13.7 | 13.7 | 0.0 | 0.0 | 15.3 | 9.1 |
| Delay Adj: | 1.00 | 1.00 | 1.00 | 1.00 | 1.00 | 1.00 | 1.00 | 1.00 | 1.00 | 1.00 | 1.00 | 1.00 |
| AdjDel/Veh: | 0.0 | 0.0 | 0.0 | 14.0 | 0.0 | 14.0 | 13.7 | 13.7 | 0.0 | 0.0 | 15.3 | 9.1 |
| LOS by Move: | * | * | * | B | * | B | B | B | * | * | C | A |
| ApproachDel: | xxxxxx | | | 14.0 | | | 13.7 | | | 13.4 | | |
| Delay Adj: | xxxxx | | | 1.00 | | | 1.00 | | | 1.00 | | |
| ApprAdjDel: | xxxxxx | | | 14.0 | | | 13.7 | | | 13.4 | | |
| LOS by Appr: | * | | | B | | | B | | | B | | |
| AllWayAvgQ: | 0.0 | 0.0 | 0.0 | 0.8 | 0.8 | 0.8 | 0.9 | 0.9 | 0.9 | 0.0 | 1.2 | 0.3 |

Note: Queue reported is the number of cars per lane.

Traffix 7.9.0215 (c) 2008 Dowling Assoc. Licensed to MMA, LONG BEACH, CA

Valle Verde Home Project
Existing+Ambient+Cumulative+Project (CUP Buildout)
AM Peak Hour

Level Of Service Computation Report
ICU 1(Loss as Cycle Length %) Method (Future Volume Alternative)

Intersection #9 Las Palmas/S La Cumbre Rd at US-101 SB Ramps

| | | | |
|---|---|---|---|
| Cycle (sec): | 100 | Critical Vol./Cap.(X): | 0.617 |
| Loss Time (sec): | 10 (Y+R=4.0 sec) | Average Delay (sec/veh): | xxxxxx |
| Optimal Cycle: | 41 | Level Of Service: | B |

| Approach: | North Bound | | | South Bound | | | East Bound | | | West Bound | | |
|---|---|---|---|---|---|---|---|---|---|---|---|---|
| Movement: | L | T | R | L | T | R | L | T | R | L | T | R |
| Control: | Protected | | | Protected | | | Protected | | | Protected | | |
| Rights: | Include | | | Include | | | Include | | | Include | | |
| Min. Green: | 0 | 0 | 0 | 0 | 0 | 0 | 0 | 0 | 0 | 0 | 0 | 0 |
| Lanes: | 0 0 2 | 0 | 1 | 2 0 1 | 0 | 0 | 1 1 0 | 0 | 1 | 0 0 0 | 0 | 0 |
| Volume Module: | | | | | | | | | | | | |
| Base Vol: | 0 | 422 | 239 | 449 | 385 | 0 | 458 | 5 | 110 | 0 | 0 | 0 |
| Growth Adj: | 1.02 | 1.02 | 1.02 | 1.02 | 1.02 | 1.02 | 1.02 | 1.02 | 1.02 | 1.02 | 1.02 | 1.02 |
| Initial Bse: | 0 | 430 | 244 | 458 | 393 | 0 | 467 | 5 | 112 | 0 | 0 | 0 |
| Added Vol: | 0 | 24 | 0 | 0 | 2 | 0 | 0 | 0 | 4 | 0 | 0 | 0 |
| PasserByVol: | 0 | 4 | 0 | 3 | 1 | 0 | 0 | 0 | 0 | 0 | 0 | 0 |
| Initial Fut: | 0 | 458 | 244 | 461 | 396 | 0 | 467 | 5 | 116 | 0 | 0 | 0 |
| User Adj: | 1.00 | 1.00 | 1.00 | 1.00 | 1.00 | 1.00 | 1.00 | 1.00 | 1.00 | 1.00 | 1.00 | 1.00 |
| PHF Adj: | 1.00 | 1.00 | 1.00 | 1.00 | 1.00 | 1.00 | 1.00 | 1.00 | 1.00 | 1.00 | 1.00 | 1.00 |
| PHF Volume: | 0 | 458 | 244 | 461 | 396 | 0 | 467 | 5 | 116 | 0 | 0 | 0 |
| Reduct Vol: | 0 | 0 | 0 | 0 | 0 | 0 | 0 | 0 | 0 | 0 | 0 | 0 |
| Reduced Vol: | 0 | 458 | 244 | 461 | 396 | 0 | 467 | 5 | 116 | 0 | 0 | 0 |
| PCE Adj: | 1.00 | 1.00 | 1.00 | 1.00 | 1.00 | 1.00 | 1.00 | 1.00 | 1.00 | 1.00 | 1.00 | 1.00 |
| MLF Adj: | 1.00 | 1.00 | 1.00 | 1.00 | 1.00 | 1.00 | 1.00 | 1.00 | 1.00 | 1.00 | 1.00 | 1.00 |
| FinalVolume: | 0 | 458 | 244 | 461 | 396 | 0 | 467 | 5 | 116 | 0 | 0 | 0 |
| Saturation Flow Module: | | | | | | | | | | | | |
| Sat/Lane: | 1600 | 1600 | 1600 | 1600 | 1600 | 1600 | 1600 | 1600 | 1600 | 1600 | 1600 | 1600 |
| Adjustment: | 1.00 | 1.00 | 1.00 | 0.80 | 1.00 | 1.00 | 0.80 | 1.00 | 1.00 | 1.00 | 1.00 | 1.00 |
| Lanes: | 0.00 | 2.00 | 1.00 | 2.00 | 1.00 | 0.00 | 1.98 | 0.02 | 1.00 | 0.00 | 0.00 | 0.00 |
| Final Sat.: | 0 | 3200 | 1600 | 2560 | 1600 | 0 | 2532 | 35 | 1600 | 0 | 0 | 0 |
| Capacity Analysis Module: | | | | | | | | | | | | |
| Vol/Sat: | 0.00 | 0.14 | 0.15 | 0.18 | 0.25 | 0.00 | 0.18 | 0.15 | 0.07 | 0.00 | 0.00 | 0.00 |
| Crit Moves: | | | **** | **** | | | **** | | | | | |

Valle Verde Home Project
Existing+Ambient+Cumulative+Project (CUP Buildout)
AM Peak Hour

Scenario Report

| | |
|---|---|
| Scenario: | E+A+C+P Alt2 AM |
| Command: | E+A+C+P Alt2 AM |
| Volume: | E+A+C+P AM |
| Geometry: | Existing |
| Impact Fee: | Default Impact Fee |
| Trip Generation: | AM Peak |
| Trip Distribution: | Trip Distribution |
| Paths: | Default Path |
| Routes: | Default Route |
| Configuration: | E+A+C+P Alt2 AM |

Valle Verde Home Project
Existing+Ambient+Cumulative+Project (CUP Buildout)
AM Peak Hour

Trip Generation Report

Forecast for AM Peak

| Zone # | Subzone | Amount | Units | Rate In | Rate Out | Trips In | Trips Out | Total Trips | % Of Total |
|---|---|---|---|---|---|---|---|---|---|
| 1 | 1235 Veronic | 1.00 | Residential | 9.00 | 46.00 | 9 | 46 | 55 | 13.2 |
| | Zone 1 Subtotal | | | | | 9 | 46 | 55 | 13.2 |
| 5 | 3820 State S | 1.00 | Office | 98.00 | 13.00 | 98 | 13 | 111 | 26.6 |
| | Zone 5 Subtotal | | | | | 98 | 13 | 111 | 26.6 |
| 6 | 900-1100 Las | 1.00 | Residential | 6.00 | 15.00 | 6 | 15 | 21 | 5.0 |
| | Zone 6 Subtotal | | | | | 6 | 15 | 21 | 5.0 |
| 12 | 215 Pesetas | 1.00 | Medical | 24.00 | 17.00 | 24 | 17 | 41 | 9.8 |
| | Zone 12 Subtotal | | | | | 24 | 17 | 41 | 9.8 |
| 13 | Elings Park | 1.00 | Park | 65.00 | 4.00 | 65 | 4 | 69 | 16.5 |
| | Zone 13 Subtotal | | | | | 65 | 4 | 69 | 16.5 |
| 14 | Cancer Cente | 1.00 | Medical Office | 89.00 | 25.00 | 89 | 25 | 114 | 27.3 |
| | Zone 14 Subtotal | | | | | 89 | 25 | 114 | 27.3 |
| 102 | Project (Val | 1.00 | Residential | 3.00 | 3.00 | 3 | 3 | 6 | 1.4 |
| | Zone 102 Subtotal | | | | | 3 | 3 | 6 | 1.4 |
| TOTAL | | | | | | 294 | 123 | 417 | 100.0 |

Valle Verde Home Project
Existing+Ambient+Cumulative+Project (CUP Buildout)
AM Peak Hour

Trip Distribution Report

Percent Of Trips Distribution

| | To Gates | | | | | | | | | | |
|---|---|---|---|---|---|---|---|---|---|---|---|
| Zone | 1 | 2 | 3 | 4 | 5 | 6 | 7 | 8 | 9 | 10 | 11 |
| 1 | 10.0 | 5.0 | 30.0 | 30.0 | 5.0 | 5.0 | 0.0 | 15.0 | 0.0 | 0.0 | 0.0 |
| 5 | 0.0 | 0.0 | 40.0 | 30.0 | 0.0 | 0.0 | 2.5 | 2.5 | 5.0 | 15.0 | 5.0 |
| 6 | 10.0 | 5.0 | 30.0 | 30.0 | 5.0 | 5.0 | 0.0 | 15.0 | 0.0 | 0.0 | 0.0 |
| 12 | 0.0 | 0.0 | 40.0 | 30.0 | 0.0 | 0.0 | 2.5 | 2.5 | 5.0 | 15.0 | 5.0 |
| 13 | 10.0 | 5.0 | 30.0 | 30.0 | 5.0 | 5.0 | 5.0 | 10.0 | 0.0 | 0.0 | 0.0 |
| 14 | 0.0 | 10.0 | 35.0 | 25.0 | 0.0 | 0.0 | 3.0 | 2.0 | 10.0 | 15.0 | 0.0 |
| 102 | 5.0 | 5.0 | 40.0 | 30.0 | 5.0 | 0.0 | 0.0 | 10.0 | 0.0 | 5.0 | 0.0 |

Valle Verde Home Project
Existing+Ambient+Cumulative+Project (CUP Buildout)
AM Peak Hour

Turning Movement Report
AM Peak

| Volume | Northbound | | | Southbound | | | Eastbound | | | Westbound | | | Total |
|---|---|---|---|---|---|---|---|---|---|---|---|---|---|
| Type | Left | Thru | Right | Left | Thru | Right | Left | Thru | Right | Left | Thru | Right | Volume |
| #6 Calle de los Amigos at Modoc Rd | | | | | | | | | | | | | |
| Base | 98 | 0 | 46 | 0 | 0 | 0 | 0 | 198 | 53 | 19 | 312 | 0 | 726 |
| Added | 18 | 0 | 1 | 0 | 0 | 0 | 0 | 7 | 2 | 1 | 3 | 0 | 32 |
| Total | 116 | 0 | 47 | 0 | 0 | 0 | 0 | 205 | 55 | 20 | 315 | 0 | 758 |
| #7 Via Senda at Modoc Rd | | | | | | | | | | | | | |
| Base | 38 | 0 | 139 | 0 | 0 | 0 | 0 | 118 | 96 | 179 | 134 | 0 | 703 |
| Added | 0 | 0 | 5 | 0 | 0 | 0 | 0 | 4 | 0 | 17 | 3 | 0 | 29 |
| Total | 38 | 0 | 144 | 0 | 0 | 0 | 0 | 122 | 96 | 196 | 137 | 0 | 732 |
| #8 Via Senda at Las Palmas Dr | | | | | | | | | | | | | |
| Base | 0 | 0 | 0 | 242 | 0 | 35 | 27 | 289 | 0 | 0 | 344 | 149 | 1084 |
| Added | 0 | 0 | 0 | 17 | 0 | 0 | 0 | 6 | 0 | 0 | 2 | 5 | 30 |
| Total | 0 | 0 | 0 | 259 | 0 | 35 | 27 | 295 | 0 | 0 | 346 | 154 | 1114 |
| #9 Las Palmas/S La Cumbre Rd at US-101 SB Ramps | | | | | | | | | | | | | |
| Base | 0 | 430 | 244 | 458 | 393 | 0 | 467 | 5 | 112 | 0 | 0 | 0 | 2109 |
| Added | 0 | 24 | 0 | 0 | 2 | 0 | 0 | 0 | 4 | 0 | 0 | 0 | 30 |
| PassBy | 0 | 4 | 0 | 3 | 1 | 0 | 0 | 0 | 0 | 0 | 0 | 0 | 8 |
| Total | 0 | 458 | 244 | 461 | 396 | 0 | 467 | 5 | 116 | 0 | 0 | 0 | 2147 |

Valle Verde Home Project
Existing+Ambient+Cumulative+Project (CUP Buildout)
AM Peak Hour

Impact Analysis Report
Level Of Service

| Intersection | Base LOS | Base Del/ Veh | Base V/ C | Future LOS | Future Del/ Veh | Future V/ C | Change in |
|---|---|---|---|---|---|---|---|
| # 6 Calle de los Amigos at Modoc R | B | 12.9 | 0.000 | B | 13.6 | 0.000 | + 0.668 D/V |
| # 7 Via Senda at Modoc Rd | A | 9.7 | 0.415 | B | 10.0 | 0.444 | + 0.029 V/C |
| # 8 Via Senda at Las Palmas Dr | B | 13.2 | 0.554 | B | 13.6 | 0.565 | + 0.011 V/C |
| # 9 Las Palmas/S La Cumbre Rd at | C | 26.2 | 0.545 | C | 26.3 | 0.546 | + 0.114 D/V |

Traffix 7.9.0215 (c) 2008 Dowling Assoc. Licensed to MMA, LONG BEACH, CA

Valle Verde Home Project
Existing+Ambient+Cumulative+Project (CUP Buildout)
AM Peak Hour

Level Of Service Computation Report
2000 HCM Unsignalized Method (Future Volume Alternative)

Intersection #6 Calle de los Amigos at Modoc Rd

Average Delay (sec/veh): 3.1  Worst Case Level Of Service: B[ 13.6]

| Street Name: | Calle de los Amigos | | | | | | Modoc Rd | | | | | |
|---|---|---|---|---|---|---|---|---|---|---|---|---|
| Approach: | North Bound | | | South Bound | | | East Bound | | | West Bound | | |
| Movement: | L - T - R | | | L - T - R | | | L - T - R | | | L - T - R | | |
| Control: | Stop Sign | | | Stop Sign | | | Uncontrolled | | | Uncontrolled | | |
| Rights: | Include | | | Include | | | Include | | | Include | | |
| Lanes: | 1 0 0 0 1 | | | 0 0 0 0 0 | | | 0 0 0 1 0 | | | 1 0 1 0 0 | | |
| Volume Module: | | | | | | | | | | | | |
| Base Vol: | 96 | 0 | 45 | 0 | 0 | 0 | 0 | 194 | 52 | 19 | 306 | 0 |
| Growth Adj: | 1.02 | 1.02 | 1.02 | 1.02 | 1.02 | 1.02 | 1.02 | 1.02 | 1.02 | 1.02 | 1.02 | 1.02 |
| Initial Bse: | 98 | 0 | 46 | 0 | 0 | 0 | 0 | 198 | 53 | 19 | 312 | 0 |
| Added Vol: | 18 | 0 | 1 | 0 | 0 | 0 | 0 | 7 | 2 | 1 | 3 | 0 |
| PasserByVol: | 0 | 0 | 0 | 0 | 0 | 0 | 0 | 0 | 0 | 0 | 0 | 0 |
| Initial Fut: | 116 | 0 | 47 | 0 | 0 | 0 | 0 | 205 | 55 | 20 | 315 | 0 |
| User Adj: | 1.00 | 1.00 | 1.00 | 1.00 | 1.00 | 1.00 | 1.00 | 1.00 | 1.00 | 1.00 | 1.00 | 1.00 |
| PHF Adj: | 1.00 | 1.00 | 1.00 | 1.00 | 1.00 | 1.00 | 1.00 | 1.00 | 1.00 | 1.00 | 1.00 | 1.00 |
| PHF Volume: | 116 | 0 | 47 | 0 | 0 | 0 | 0 | 205 | 55 | 20 | 315 | 0 |
| Reduct Vol: | 0 | 0 | 0 | 0 | 0 | 0 | 0 | 0 | 0 | 0 | 0 | 0 |
| FinalVolume: | 116 | 0 | 47 | 0 | 0 | 0 | 0 | 205 | 55 | 20 | 315 | 0 |
| Critical Gap Module: | | | | | | | | | | | | |
| Critical Gp: | 6.4 | xxxx | 6.2 | xxxxx | xxxx | xxxxx | xxxxx | xxxx | xxxxx | 4.1 | xxxx | xxxxx |
| FollowUpTim: | 3.5 | xxxx | 3.3 | xxxxx | xxxx | xxxxx | xxxxx | xxxx | xxxxx | 2.2 | xxxx | xxxxx |
| Capacity Module: | | | | | | | | | | | | |
| Cnflict Vol: | 588 | xxxx | 232 | xxxx | xxxx | xxxxx | xxxx | xxxx | xxxxx | 260 | xxxx | xxxxx |
| Potent Cap.: | 475 | xxxx | 812 | xxxx | xxxx | xxxxx | xxxx | xxxx | xxxxx | 1316 | xxxx | xxxxx |
| Move Cap.: | 469 | xxxx | 812 | xxxx | xxxx | xxxxx | xxxx | xxxx | xxxxx | 1316 | xxxx | xxxxx |
| Volume/Cap: | 0.25 | xxxx | 0.06 | xxxx | xxxx | xxxx | xxxx | xxxx | xxxx | 0.02 | xxxx | xxxx |
| Level Of Service Module: | | | | | | | | | | | | |
| 2Way95thQ: | 1.0 | xxxx | 0.2 | xxxx | xxxx | xxxxx | xxxx | xxxx | xxxxx | 0.0 | xxxx | xxxxx |
| Control Del: | 15.2 | xxxx | 9.7 | xxxxx | xxxx | xxxxx | xxxxx | xxxx | xxxxx | 7.8 | xxxx | xxxxx |
| LOS by Move: | C | * | A | * | * | * | * | * | * | A | * | * |
| Movement: | LT - LTR - RT | | | LT - LTR - RT | | | LT - LTR - RT | | | LT - LTR - RT | | |
| Shared Cap.: | xxxx | xxxx | xxxxx | xxxx | xxxx | xxxxx | xxxx | xxxx | xxxxx | xxxx | xxxx | xxxxx |
| SharedQueue: | xxxxx | xxxx | xxxxx | xxxxx | xxxx | xxxxx | xxxxx | xxxx | xxxxx | xxxxx | xxxx | xxxxx |
| Shrd ConDel: | xxxxx | xxxx | xxxxx | xxxxx | xxxx | xxxxx | xxxxx | xxxx | xxxxx | xxxxx | xxxx | xxxxx |
| Shared LOS: | * | * | * | * | * | * | * | * | * | * | * | * |
| ApproachDel: | 13.6 | | | xxxxxx | | | xxxxxx | | | xxxxxx | | |
| ApproachLOS: | B | | | * | | | * | | | * | | |

Note: Queue reported is the number of cars per lane.

Valle Verde Home Project
Existing+Ambient+Cumulative+Project (CUP Buildout)
AM Peak Hour

Level Of Service Computation Report
2000 HCM 4-Way Stop Method (Future Volume Alternative)

Intersection #7 Via Senda at Modoc Rd

Cycle (sec): 100 | Critical Vol./Cap.(X): 0.444
Loss Time (sec): 0 (Y+R=4.0 sec) | Average Delay (sec/veh): 10.0
Optimal Cycle: 0 | Level Of Service: B

| Street Name: | Via Senda | | | | | | Modoc Rd | | | | | |
|---|---|---|---|---|---|---|---|---|---|---|---|---|
| Approach: | North Bound | | | South Bound | | | East Bound | | | West Bound | | |
| Movement: | L - | T - | R | L - | T - | R | L - | T - | R | L - | T - | R |
| Control: | Stop Sign | | | Stop Sign | | | Stop Sign | | | Stop Sign | | |
| Rights: | Include | | | Include | | | Include | | | Include | | |
| Min. Green: | 0 | 0 | 0 | 0 | 0 | 0 | 0 | 0 | 0 | 0 | 0 | 0 |
| Lanes: | 0 0 | 1! 0 | 0 | 0 0 | 0 0 | 0 | 0 0 | 0 1 | 0 | 0 1 | 0 0 | 0 |
| Volume Module: | | | | | | | | | | | | |
| Base Vol: | 37 | 0 | 136 | 0 | 0 | 0 | 0 | 116 | 94 | 175 | 131 | 0 |
| Growth Adj: | 1.02 | 1.02 | 1.02 | 1.02 | 1.02 | 1.02 | 1.02 | 1.02 | 1.02 | 1.02 | 1.02 | 1.02 |
| Initial Bse: | 38 | 0 | 139 | 0 | 0 | 0 | 0 | 118 | 96 | 179 | 134 | 0 |
| Added Vol: | 0 | 0 | 5 | 0 | 0 | 0 | 0 | 4 | 0 | 17 | 3 | 0 |
| PasserByVol: | 0 | 0 | 0 | 0 | 0 | 0 | 0 | 0 | 0 | 0 | 0 | 0 |
| Initial Fut: | 38 | 0 | 144 | 0 | 0 | 0 | 0 | 122 | 96 | 196 | 137 | 0 |
| User Adj: | 1.00 | 1.00 | 1.00 | 1.00 | 1.00 | 1.00 | 1.00 | 1.00 | 1.00 | 1.00 | 1.00 | 1.00 |
| PHF Adj: | 1.00 | 1.00 | 1.00 | 1.00 | 1.00 | 1.00 | 1.00 | 1.00 | 1.00 | 1.00 | 1.00 | 1.00 |
| PHF Volume: | 38 | 0 | 144 | 0 | 0 | 0 | 0 | 122 | 96 | 196 | 137 | 0 |
| Reduct Vol: | 0 | 0 | 0 | 0 | 0 | 0 | 0 | 0 | 0 | 0 | 0 | 0 |
| Reduced Vol: | 38 | 0 | 144 | 0 | 0 | 0 | 0 | 122 | 96 | 196 | 137 | 0 |
| PCE Adj: | 1.00 | 1.00 | 1.00 | 1.00 | 1.00 | 1.00 | 1.00 | 1.00 | 1.00 | 1.00 | 1.00 | 1.00 |
| MLF Adj: | 1.00 | 1.00 | 1.00 | 1.00 | 1.00 | 1.00 | 1.00 | 1.00 | 1.00 | 1.00 | 1.00 | 1.00 |
| FinalVolume: | 38 | 0 | 144 | 0 | 0 | 0 | 0 | 122 | 96 | 196 | 137 | 0 |
| Saturation Flow Module: | | | | | | | | | | | | |
| Adjustment: | 1.00 | 1.00 | 1.00 | 1.00 | 1.00 | 1.00 | 1.00 | 1.00 | 1.00 | 1.00 | 1.00 | 1.00 |
| Lanes: | 0.20 | 0.01 | 0.79 | 0.00 | 0.00 | 0.00 | 0.00 | 0.56 | 0.44 | 0.59 | 0.41 | 0.00 |
| Final Sat.: | 149 | 0 | 568 | 0 | 0 | 0 | 0 | 437 | 342 | 441 | 308 | 0 |
| Capacity Analysis Module: | | | | | | | | | | | | |
| Vol/Sat: | 0.25 | 0.00 | 0.25 | xxxx | xxxx | xxxx | xxxx | 0.28 | 0.28 | 0.44 | 0.44 | xxxx |
| Crit Moves: | **** | | | | | | | **** | | | **** | |
| Delay/Veh: | 9.1 | 9.1 | 9.1 | 0.0 | 0.0 | 0.0 | 0.0 | 9.1 | 9.1 | 11.2 | 11.2 | 0.0 |
| Delay Adj: | 1.00 | 1.00 | 1.00 | 1.00 | 1.00 | 1.00 | 1.00 | 1.00 | 1.00 | 1.00 | 1.00 | 1.00 |
| AdjDel/Veh: | 9.1 | 9.1 | 9.1 | 0.0 | 0.0 | 0.0 | 0.0 | 9.1 | 9.1 | 11.2 | 11.2 | 0.0 |
| LOS by Move: | A | A | A | * | * | * | * | A | A | B | B | * |
| ApproachDel: | 9.1 | | | xxxxxx | | | | 9.1 | | | 11.2 | |
| Delay Adj: | 1.00 | | | xxxxx | | | | 1.00 | | | 1.00 | |
| ApprAdjDel: | 9.1 | | | xxxxxx | | | | 9.1 | | | 11.2 | |
| LOS by Appr: | A | | | * | | | | A | | | B | |
| AllWayAvgQ: | 0.3 | 0.3 | 0.3 | 0.0 | 0.0 | 0.0 | 0.4 | 0.4 | 0.4 | 0.7 | 0.7 | 0.7 |

Note: Queue reported is the number of cars per lane.

Valle Verde Home Project
Existing+Ambient+Cumulative+Project (CUP Buildout)
AM Peak Hour

Level Of Service Computation Report
2000 HCM 4-Way Stop Method (Future Volume Alternative)

Intersection #8 Via Senda at Las Palmas Dr

Cycle (sec): 100 | Critical Vol./Cap.(X): 0.565
Loss Time (sec): 0 (Y+R=4.0 sec) | Average Delay (sec/veh): 13.6
Optimal Cycle: 0 | Level Of Service: B

| Street Name: | Via Senda | | | | | | Las Palmas Dr | | | | | |
|---|---|---|---|---|---|---|---|---|---|---|---|---|
| Approach: | North Bound | | | South Bound | | | East Bound | | | West Bound | | |
| Movement: | L - | T - | R | L - | T - | R | L - | T - | R | L - | T - | R |
| Control: | Stop Sign | | | Stop Sign | | | Stop Sign | | | Stop Sign | | |
| Rights: | Include | | | Include | | | Include | | | Include | | |
| Min. Green: | 0 | 0 | 0 | 0 | 0 | 0 | 0 | 0 | 0 | 0 | 0 | 0 |
| Lanes: | 0 0 | 0 0 | 0 | 0 0 | 1! 0 | 0 | 0 1 | 0 0 | 0 | 0 0 | 1 0 | 1 |
| Volume Module: | | | | | | | | | | | | |
| Base Vol: | 0 | 0 | 0 | 237 | 0 | 34 | 26 | 283 | 0 | 0 | 337 | 146 |
| Growth Adj: | 1.02 | 1.02 | 1.02 | 1.02 | 1.02 | 1.02 | 1.02 | 1.02 | 1.02 | 1.02 | 1.02 | 1.02 |
| Initial Bse: | 0 | 0 | 0 | 242 | 0 | 35 | 27 | 289 | 0 | 0 | 344 | 149 |
| Added Vol: | 0 | 0 | 0 | 17 | 0 | 0 | 0 | 6 | 0 | 0 | 2 | 5 |
| PasserByVol: | 0 | 0 | 0 | 0 | 0 | 0 | 0 | 0 | 0 | 0 | 0 | 0 |
| Initial Fut: | 0 | 0 | 0 | 259 | 0 | 35 | 27 | 295 | 0 | 0 | 346 | 154 |
| User Adj: | 1.00 | 1.00 | 1.00 | 1.00 | 1.00 | 1.00 | 1.00 | 1.00 | 1.00 | 1.00 | 1.00 | 1.00 |
| PHF Adj: | 1.00 | 1.00 | 1.00 | 1.00 | 1.00 | 1.00 | 1.00 | 1.00 | 1.00 | 1.00 | 1.00 | 1.00 |
| PHF Volume: | 0 | 0 | 0 | 259 | 0 | 35 | 27 | 295 | 0 | 0 | 346 | 154 |
| Reduct Vol: | 0 | 0 | 0 | 0 | 0 | 0 | 0 | 0 | 0 | 0 | 0 | 0 |
| Reduced Vol: | 0 | 0 | 0 | 259 | 0 | 35 | 27 | 295 | 0 | 0 | 346 | 154 |
| PCE Adj: | 1.00 | 1.00 | 1.00 | 1.00 | 1.00 | 1.00 | 1.00 | 1.00 | 1.00 | 1.00 | 1.00 | 1.00 |
| MLF Adj: | 1.00 | 1.00 | 1.00 | 1.00 | 1.00 | 1.00 | 1.00 | 1.00 | 1.00 | 1.00 | 1.00 | 1.00 |
| FinalVolume: | 0 | 0 | 0 | 259 | 0 | 35 | 27 | 295 | 0 | 0 | 346 | 154 |
| Saturation Flow Module: | | | | | | | | | | | | |
| Adjustment: | 1.00 | 1.00 | 1.00 | 1.00 | 1.00 | 1.00 | 1.00 | 1.00 | 1.00 | 1.00 | 1.00 | 1.00 |
| Lanes: | 0.00 | 0.00 | 0.00 | 0.88 | 0.00 | 0.12 | 0.08 | 0.92 | 0.00 | 0.00 | 1.00 | 1.00 |
| Final Sat.: | 0 | 0 | 0 | 520 | 0 | 70 | 52 | 582 | 0 | 0 | 612 | 694 |
| Capacity Analysis Module: | | | | | | | | | | | | |
| Vol/Sat: | xxxx | xxxx | xxxx | 0.50 | xxxx | 0.50 | 0.51 | 0.51 | xxxx | xxxx | 0.56 | 0.22 |
| Crit Moves: | | | | | | **** | | **** | | | **** | |
| Delay/Veh: | 0.0 | 0.0 | 0.0 | 14.0 | 0.0 | 14.0 | 13.7 | 13.7 | 0.0 | 0.0 | 15.3 | 9.1 |
| Delay Adj: | 1.00 | 1.00 | 1.00 | 1.00 | 1.00 | 1.00 | 1.00 | 1.00 | 1.00 | 1.00 | 1.00 | 1.00 |
| AdjDel/Veh: | 0.0 | 0.0 | 0.0 | 14.0 | 0.0 | 14.0 | 13.7 | 13.7 | 0.0 | 0.0 | 15.3 | 9.1 |
| LOS by Move: | * | * | * | B | * | B | B | B | * | * | C | A |
| ApproachDel: | xxxxxx | | | 14.0 | | | 13.7 | | | 13.4 | | |
| Delay Adj: | xxxxx | | | 1.00 | | | 1.00 | | | 1.00 | | |
| ApprAdjDel: | xxxxxx | | | 14.0 | | | 13.7 | | | 13.4 | | |
| LOS by Appr: | * | | | B | | | B | | | B | | |
| AllWayAvgQ: | 0.0 | 0.0 | 0.0 | 0.8 | 0.8 | 0.8 | 0.9 | 0.9 | 0.9 | 0.0 | 1.2 | 0.3 |

Note: Queue reported is the number of cars per lane.

Traffix 7.9.0215 (c) 2008 Dowling Assoc. Licensed to MMA, LONG BEACH, CA

Valle Verde Home Project
Existing+Ambient+Cumulative+Project (CUP Buildout)
AM Peak Hour

Level Of Service Computation Report
2000 HCM Operations Method (Future Volume Alternative)

Intersection #9 Las Positas/S La Cumbre Rd at US-101 SB Ramps

| | | | |
|---|---|---|---|
| Cycle (sec): | 100 | Critical Vol./Cap.(X): | 0.546 |
| Loss Time (sec): | 10 (Y+R=4.0 sec) | Average Delay (sec/veh): | 26.3 |
| Optimal Cycle: | 39 | Level Of Service: | C |

| Approach: | North Bound | | | South Bound | | | East Bound | | | West Bound | | |
|---|---|---|---|---|---|---|---|---|---|---|---|---|
| Movement: | L | T | R | L | T | R | L | T | R | L | T | R |
| Control: | Protected | | | Protected | | | Protected | | | Protected | | |
| Rights: | Include | | | Include | | | Include | | | Include | | |
| Min. Green: | 0 | 0 | 0 | 0 | 0 | 0 | 0 | 0 | 0 | 0 | 0 | 0 |
| Lanes: | 0 0 2 | 0 | 1 | 2 0 | 1 0 | 0 | 1 1 | 0 0 | 1 | 0 0 | 0 0 | 0 |
| Volume Module: | | | | | | | | | | | | |
| Base Vol: | 0 | 422 | 239 | 449 | 385 | 0 | 458 | 5 | 110 | 0 | 0 | 0 |
| Growth Adj: | 1.02 | 1.02 | 1.02 | 1.02 | 1.02 | 1.02 | 1.02 | 1.02 | 1.02 | 1.02 | 1.02 | 1.02 |
| Initial Bse: | 0 | 430 | 244 | 458 | 393 | 0 | 467 | 5 | 112 | 0 | 0 | 0 |
| Added Vol: | 0 | 24 | 0 | 0 | 2 | 0 | 0 | 0 | 4 | 0 | 0 | 0 |
| PasserByVol: | 0 | 4 | 0 | 3 | 1 | 0 | 0 | 0 | 0 | 0 | 0 | 0 |
| Initial Fut: | 0 | 458 | 244 | 461 | 396 | 0 | 467 | 5 | 116 | 0 | 0 | 0 |
| User Adj: | 1.00 | 1.00 | 1.00 | 1.00 | 1.00 | 1.00 | 1.00 | 1.00 | 1.00 | 1.00 | 1.00 | 1.00 |
| PHF Adj: | 1.00 | 1.00 | 1.00 | 1.00 | 1.00 | 1.00 | 1.00 | 1.00 | 1.00 | 1.00 | 1.00 | 1.00 |
| PHF Volume: | 0 | 458 | 244 | 461 | 396 | 0 | 467 | 5 | 116 | 0 | 0 | 0 |
| Reduct Vol: | 0 | 0 | 0 | 0 | 0 | 0 | 0 | 0 | 0 | 0 | 0 | 0 |
| Reduced Vol: | 0 | 458 | 244 | 461 | 396 | 0 | 467 | 5 | 116 | 0 | 0 | 0 |
| PCE Adj: | 1.00 | 1.00 | 1.00 | 1.00 | 1.00 | 1.00 | 1.00 | 1.00 | 1.00 | 1.00 | 1.00 | 1.00 |
| MLF Adj: | 1.00 | 1.00 | 1.00 | 1.00 | 1.00 | 1.00 | 1.00 | 1.00 | 1.00 | 1.00 | 1.00 | 1.00 |
| FinalVolume: | 0 | 458 | 244 | 461 | 396 | 0 | 467 | 5 | 116 | 0 | 0 | 0 |
| Saturation Flow Module: | | | | | | | | | | | | |
| Sat/Lane: | 1900 | 1900 | 1900 | 1900 | 1900 | 1900 | 1900 | 1900 | 1900 | 1900 | 1900 | 1900 |
| Adjustment: | 1.00 | 0.95 | 0.85 | 0.74 | 1.00 | 1.00 | 0.70 | 0.88 | 0.85 | 1.00 | 1.00 | 1.00 |
| Lanes: | 0.00 | 2.00 | 1.00 | 2.00 | 1.00 | 0.00 | 1.98 | 0.02 | 1.00 | 0.00 | 0.00 | 0.00 |
| Final Sat.: | 0 | 3610 | 1615 | 2801 | 1900 | 0 | 2655 | 29 | 1615 | 0 | 0 | 0 |
| Capacity Analysis Module: | | | | | | | | | | | | |
| Vol/Sat: | 0.00 | 0.13 | 0.15 | 0.16 | 0.21 | 0.00 | 0.18 | 0.18 | 0.07 | 0.00 | 0.00 | 0.00 |
| Crit Moves: | | | **** | **** | | | **** | | | | | |
| Green/Cycle: | 0.00 | 0.28 | 0.28 | 0.30 | 0.58 | 0.00 | 0.32 | 0.32 | 0.32 | 0.00 | 0.00 | 0.00 |
| Volume/Cap: | 0.00 | 0.46 | 0.55 | 0.55 | 0.36 | 0.00 | 0.55 | 0.55 | 0.22 | 0.00 | 0.00 | 0.00 |
| Delay/Veh: | 0.0 | 30.3 | 32.2 | 30.0 | 11.5 | 0.0 | 28.6 | 28.6 | 25.0 | 0.0 | 0.0 | 0.0 |
| User DelAdj: | 1.00 | 1.00 | 1.00 | 1.00 | 1.00 | 1.00 | 1.00 | 1.00 | 1.00 | 1.00 | 1.00 | 1.00 |
| AdjDel/Veh: | 0.0 | 30.3 | 32.2 | 30.0 | 11.5 | 0.0 | 28.6 | 28.6 | 25.0 | 0.0 | 0.0 | 0.0 |
| LOS by Move: | A | C | C | C | B | A | C | C | C | A | A | A |
| HCM2kAvgQ: | 0 | 6 | 7 | 7 | 6 | 0 | 7 | 8 | 3 | 0 | 0 | 0 |

Note: Queue reported is the number of cars per lane.

# CUMULATIVE PROJECT WITH CUP BUILDOUT
# LOS WORKSHEETS

# WEEKDAY PM PEAK HOUR

Valle Verde Home Project
Existing+Ambient+Cumulative+Project (CUP Buildout)
PM Peak Hour

Scenario Report

| | |
|---|---|
| Scenario: | E+A+C+P Alt2 PM |
| Command: | E+A+C+P Alt2 PM |
| Volume: | E+A+C+P PM |
| Geometry: | Existing |
| Impact Fee: | Default Impact Fee |
| Trip Generation: | PM Peak |
| Trip Distribution: | Trip Distribution |
| Paths: | Default Path |
| Routes: | Default Route |
| Configuration: | E+A+C+P Alt2 PM |

Valle Verde Home Project
Existing+Ambient+Cumulative+Project (CUP Buildout)
PM Peak Hour

Trip Generation Report

Forecast for PM Peak

| Zone # | Subzone | Amount | Units | Rate In | Rate Out | Trips In | Trips Out | Total Trips | % Of Total |
|---|---|---|---|---|---|---|---|---|---|
| 1 | 1235 Veronic | 1.00 | Residential | 44.00 | 21.00 | 44 | 21 | 65 | 11.3 |
| | Zone 1 Subtotal | | | | | 44 | 21 | 65 | 11.3 |
| 5 | 3820 State S | 1.00 | Office | 18.00 | 89.00 | 18 | 89 | 107 | 18.6 |
| | Zone 5 Subtotal | | | | | 18 | 89 | 107 | 18.6 |
| 6 | 900-1100 Las | 1.00 | Residential | 10.00 | 17.00 | 10 | 17 | 27 | 4.7 |
| | Zone 6 Subtotal | | | | | 10 | 17 | 27 | 4.7 |
| 12 | 215 Pesetas | 1.00 | Medical | 17.00 | 24.00 | 17 | 24 | 41 | 7.1 |
| | Zone 12 Subtotal | | | | | 17 | 24 | 41 | 7.1 |
| 13 | Elings Park | 1.00 | Park | 76.00 | 79.00 | 76 | 79 | 155 | 27.0 |
| | Zone 13 Subtotal | | | | | 76 | 79 | 155 | 27.0 |
| 14 | Cancer Cente | 1.00 | Medical Office | 47.00 | 120.00 | 47 | 120 | 167 | 29.1 |
| | Zone 14 Subtotal | | | | | 47 | 120 | 167 | 29.1 |
| 102 | Project (Val | 1.00 | Residential | 6.00 | 6.00 | 6 | 6 | 12 | 2.1 |
| | Zone 102 Subtotal | | | | | 6 | 6 | 12 | 2.1 |
| TOTAL | | | | | | 218 | 356 | 574 | 100.0 |

Valle Verde Home Project
Existing+Ambient+Cumulative+Project (CUP Buildout)
PM Peak Hour

Trip Distribution Report

Percent Of Trips Distribution

| | To Gates | | | | | | | | | | |
|---|---|---|---|---|---|---|---|---|---|---|---|
| Zone | 1 | 2 | 3 | 4 | 5 | 6 | 7 | 8 | 9 | 10 | 11 |
| 1 | 10.0 | 5.0 | 30.0 | 30.0 | 5.0 | 5.0 | 0.0 | 15.0 | 0.0 | 0.0 | 0.0 |
| 5 | 0.0 | 0.0 | 40.0 | 30.0 | 0.0 | 0.0 | 2.5 | 2.5 | 5.0 | 15.0 | 5.0 |
| 6 | 10.0 | 5.0 | 30.0 | 30.0 | 5.0 | 5.0 | 0.0 | 15.0 | 0.0 | 0.0 | 0.0 |
| 12 | 0.0 | 0.0 | 40.0 | 30.0 | 0.0 | 0.0 | 2.5 | 2.5 | 5.0 | 15.0 | 5.0 |
| 13 | 10.0 | 5.0 | 30.0 | 30.0 | 5.0 | 5.0 | 5.0 | 10.0 | 0.0 | 0.0 | 0.0 |
| 14 | 0.0 | 10.0 | 35.0 | 25.0 | 0.0 | 0.0 | 3.0 | 2.0 | 10.0 | 15.0 | 0.0 |
| 102 | 5.0 | 5.0 | 40.0 | 30.0 | 5.0 | 0.0 | 0.0 | 10.0 | 0.0 | 5.0 | 0.0 |

Valle Verde Home Project
Existing+Ambient+Cumulative+Project (CUP Buildout)
PM Peak Hour

Turning Movement Report
PM Peak

| Volume | Northbound | | | Southbound | | | Eastbound | | | Westbound | | | Total |
|---|---|---|---|---|---|---|---|---|---|---|---|---|---|
| Type | Left | Thru | Right | Left | Thru | Right | Left | Thru | Right | Left | Thru | Right | Volume |
| #6 Calle de los Amigos at Modoc Rd | | | | | | | | | | | | | |
| Base | 71 | 0 | 36 | 0 | 0 | 0 | 0 | 335 | 111 | 49 | 281 | 0 | 882 |
| Added | 10 | 0 | 1 | 0 | 0 | 0 | 0 | 20 | 5 | 1 | 6 | 0 | 43 |
| Total | 81 | 0 | 37 | 0 | 0 | 0 | 0 | 355 | 116 | 50 | 287 | 0 | 925 |
| #7 Via Senda at Modoc Rd | | | | | | | | | | | | | |
| Base | 100 | 0 | 210 | 0 | 0 | 0 | 0 | 192 | 71 | 181 | 183 | 0 | 936 |
| Added | 0 | 0 | 18 | 0 | 0 | 0 | 0 | 7 | 0 | 10 | 6 | 0 | 41 |
| Total | 100 | 0 | 228 | 0 | 0 | 0 | 0 | 199 | 71 | 191 | 189 | 0 | 977 |
| #8 Via Senda at Las Palmas Dr | | | | | | | | | | | | | |
| Base | 0 | 0 | 0 | 231 | 0 | 28 | 28 | 279 | 0 | 0 | 276 | 275 | 1117 |
| Added | 0 | 0 | 0 | 10 | 0 | 0 | 0 | 2 | 0 | 0 | 6 | 18 | 36 |
| Total | 0 | 0 | 0 | 241 | 0 | 28 | 28 | 281 | 0 | 0 | 282 | 293 | 1153 |
| #9 Las Palmas/S La Cumbre Rd at US-101 SB Ramps | | | | | | | | | | | | | |
| Base | 0 | 320 | 147 | 611 | 393 | 0 | 616 | 1 | 77 | 0 | 0 | 0 | 2164 |
| Added | 0 | 12 | 0 | 0 | 8 | 0 | 0 | 0 | 16 | 0 | 0 | 0 | 36 |
| PassBy | 0 | 3 | 0 | 21 | 7 | 0 | 0 | 0 | 0 | 0 | 0 | 0 | 31 |
| Total | 0 | 335 | 147 | 632 | 408 | 0 | 616 | 1 | 93 | 0 | 0 | 0 | 2231 |

Valle Verde Home Project
Existing+Ambient+Cumulative+Project (CUP Buildout)
PM Peak Hour

Impact Analysis Report
Level Of Service

| Intersection | Base LOS | Base Del/ Veh | Base V/ C | Future LOS | Future Del/ Veh | Future V/ C | Change in |
|---|---|---|---|---|---|---|---|
| # 6 Calle de los Amigos at Modoc R | C | 15.2 | 0.000 | C | 16.2 | 0.000 | + 1.019 D/V |
| # 7 Via Senda at Modoc Rd | B | 12.2 | 0.535 | B | 12.8 | 0.567 | + 0.032 V/C |
| # 8 Via Senda at Las Palmas Dr | B | 12.2 | 0.471 | B | 12.5 | 0.481 | + 0.009 V/C |
| # 9 Las Palmas/S La Cumbre Rd at | B | xxxxx | 0.680 | B | xxxxx | 0.693 | + 0.013 V/C |

Traffix 7.9.0215 (c) 2008 Dowling Assoc. Licensed to MMA, LONG BEACH, CA

Valle Verde Home Project
Existing+Ambient+Cumulative+Project (CUP Buildout)
PM Peak Hour

Level Of Service Computation Report
2000 HCM Unsignalized Method (Future Volume Alternative)

Intersection #6 Calle de los Amigos at Modoc Rd

Average Delay (sec/veh): 2.5  Worst Case Level Of Service: C[ 16.2]

| Street Name: | Calle de los Amigos | | | | | | Modoc Rd | | | | | |
|---|---|---|---|---|---|---|---|---|---|---|---|---|
| Approach: | North Bound | | | South Bound | | | East Bound | | | West Bound | | |
| Movement: | L - | T - | R | L - | T - | R | L - | T - | R | L - | T - | R |
| Control: | Stop Sign | | | Stop Sign | | | Uncontrolled | | | Uncontrolled | | |
| Rights: | Include | | | Include | | | Include | | | Include | | |
| Lanes: | 1 0 0 0 1 | | | 0 0 0 0 0 | | | 0 0 0 1 0 | | | 1 0 1 0 0 | | |
| Volume Module: | | | | | | | | | | | | |
| Base Vol: | 70 | 0 | 35 | 0 | 0 | 0 | 0 | 328 | 109 | 48 | 275 | 0 |
| Growth Adj: | 1.02 | 1.02 | 1.02 | 1.02 | 1.02 | 1.02 | 1.02 | 1.02 | 1.02 | 1.02 | 1.02 | 1.02 |
| Initial Bse: | 71 | 0 | 36 | 0 | 0 | 0 | 0 | 335 | 111 | 49 | 281 | 0 |
| Added Vol: | 10 | 0 | 1 | 0 | 0 | 0 | 0 | 20 | 5 | 1 | 6 | 0 |
| PasserByVol: | 0 | 0 | 0 | 0 | 0 | 0 | 0 | 0 | 0 | 0 | 0 | 0 |
| Initial Fut: | 81 | 0 | 37 | 0 | 0 | 0 | 0 | 355 | 116 | 50 | 287 | 0 |
| User Adj: | 1.00 | 1.00 | 1.00 | 1.00 | 1.00 | 1.00 | 1.00 | 1.00 | 1.00 | 1.00 | 1.00 | 1.00 |
| PHF Adj: | 1.00 | 1.00 | 1.00 | 1.00 | 1.00 | 1.00 | 1.00 | 1.00 | 1.00 | 1.00 | 1.00 | 1.00 |
| PHF Volume: | 81 | 0 | 37 | 0 | 0 | 0 | 0 | 355 | 116 | 50 | 287 | 0 |
| Reduct Vol: | 0 | 0 | 0 | 0 | 0 | 0 | 0 | 0 | 0 | 0 | 0 | 0 |
| FinalVolume: | 81 | 0 | 37 | 0 | 0 | 0 | 0 | 355 | 116 | 50 | 287 | 0 |
| Critical Gap Module: | | | | | | | | | | | | |
| Critical Gp: | 6.4 | xxxx | 6.2 | xxxxx | xxxx | xxxxx | xxxxx | xxxx | xxxxx | 4.1 | xxxx | xxxxx |
| FollowUpTim: | 3.5 | xxxx | 3.3 | xxxxx | xxxx | xxxxx | xxxxx | xxxx | xxxxx | 2.2 | xxxx | xxxxx |
| Capacity Module: | | | | | | | | | | | | |
| Cnflict Vol: | 799 | xxxx | 413 | xxxx | xxxx | xxxxx | xxxx | xxxx | xxxxx | 471 | xxxx | xxxxx |
| Potent Cap.: | 357 | xxxx | 644 | xxxx | xxxx | xxxxx | xxxx | xxxx | xxxxx | 1102 | xxxx | xxxxx |
| Move Cap.: | 345 | xxxx | 644 | xxxx | xxxx | xxxxx | xxxx | xxxx | xxxxx | 1102 | xxxx | xxxxx |
| Volume/Cap: | 0.24 | xxxx | 0.06 | xxxx | xxxx | xxxx | xxxx | xxxx | xxxx | 0.05 | xxxx | xxxx |
| Level Of Service Module: | | | | | | | | | | | | |
| 2Way95thQ: | 0.9 | xxxx | 0.2 | xxxx | xxxx | xxxxx | xxxx | xxxx | xxxxx | 0.1 | xxxx | xxxxx |
| Control Del: | 18.6 | xxxx | 10.9 | xxxxx | xxxx | xxxxx | xxxxx | xxxx | xxxxx | 8.4 | xxxx | xxxxx |
| LOS by Move: | C | * | B | * | * | * | * | * | * | A | * | * |
| Movement: | LT - | LTR - | RT | LT - | LTR - | RT | LT - | LTR - | RT | LT - | LTR - | RT |
| Shared Cap.: | xxxx | xxxx | xxxxx | xxxx | xxxx | xxxxx | xxxx | xxxx | xxxxx | xxxx | xxxx | xxxxx |
| SharedQueue: | xxxxx | xxxx | xxxxx | xxxxx | xxxx | xxxxx | xxxxx | xxxx | xxxxx | xxxxx | xxxx | xxxxx |
| Shrd ConDel: | xxxxx | xxxx | xxxxx | xxxxx | xxxx | xxxxx | xxxxx | xxxx | xxxxx | xxxxx | xxxx | xxxxx |
| Shared LOS: | * | * | * | * | * | * | * | * | * | * | * | * |
| ApproachDel: | 16.2 | | | xxxxxx | | | xxxxxx | | | xxxxxx | | |
| ApproachLOS: | C | | | * | | | * | | | * | | |

Note: Queue reported is the number of cars per lane.

Valle Verde Home Project
Existing+Ambient+Cumulative+Project (CUP Buildout)
PM Peak Hour

Level Of Service Computation Report
2000 HCM 4-Way Stop Method (Future Volume Alternative)

Intersection #7 Via Senda at Modoc Rd

Cycle (sec): 100 | Critical Vol./Cap.(X): 0.567
Loss Time (sec): 0 (Y+R=4.0 sec) | Average Delay (sec/veh): 12.8
Optimal Cycle: 0 | Level Of Service: B

| Street Name: | Via Senda | | | | | | Modoc Rd | | | | | |
|---|---|---|---|---|---|---|---|---|---|---|---|---|
| Approach: | North Bound | | | South Bound | | | East Bound | | | West Bound | | |
| Movement: | L - | T - | R | L - | T - | R | L - | T - | R | L - | T - | R |
| Control: | Stop Sign | | | Stop Sign | | | Stop Sign | | | Stop Sign | | |
| Rights: | Include | | | Include | | | Include | | | Include | | |
| Min. Green: | 0 | 0 | 0 | 0 | 0 | 0 | 0 | 0 | 0 | 0 | 0 | 0 |
| Lanes: | 0 0 | 1! 0 | 0 | 0 0 | 0 0 | 0 | 0 0 | 0 1 | 0 | 0 1 | 0 0 | 0 |
| Volume Module: | | | | | | | | | | | | |
| Base Vol: | 98 | 0 | 206 | 0 | 0 | 0 | 0 | 188 | 70 | 177 | 179 | 0 |
| Growth Adj: | 1.02 | 1.02 | 1.02 | 1.02 | 1.02 | 1.02 | 1.02 | 1.02 | 1.02 | 1.02 | 1.02 | 1.02 |
| Initial Bse: | 100 | 0 | 210 | 0 | 0 | 0 | 0 | 192 | 71 | 181 | 183 | 0 |
| Added Vol: | 0 | 0 | 18 | 0 | 0 | 0 | 0 | 7 | 0 | 10 | 6 | 0 |
| PasserByVol: | 0 | 0 | 0 | 0 | 0 | 0 | 0 | 0 | 0 | 0 | 0 | 0 |
| Initial Fut: | 100 | 0 | 228 | 0 | 0 | 0 | 0 | 199 | 71 | 191 | 189 | 0 |
| User Adj: | 1.00 | 1.00 | 1.00 | 1.00 | 1.00 | 1.00 | 1.00 | 1.00 | 1.00 | 1.00 | 1.00 | 1.00 |
| PHF Adj: | 1.00 | 1.00 | 1.00 | 1.00 | 1.00 | 1.00 | 1.00 | 1.00 | 1.00 | 1.00 | 1.00 | 1.00 |
| PHF Volume: | 100 | 0 | 228 | 0 | 0 | 0 | 0 | 199 | 71 | 191 | 189 | 0 |
| Reduct Vol: | 0 | 0 | 0 | 0 | 0 | 0 | 0 | 0 | 0 | 0 | 0 | 0 |
| Reduced Vol: | 100 | 0 | 228 | 0 | 0 | 0 | 0 | 199 | 71 | 191 | 189 | 0 |
| PCE Adj: | 1.00 | 1.00 | 1.00 | 1.00 | 1.00 | 1.00 | 1.00 | 1.00 | 1.00 | 1.00 | 1.00 | 1.00 |
| MLF Adj: | 1.00 | 1.00 | 1.00 | 1.00 | 1.00 | 1.00 | 1.00 | 1.00 | 1.00 | 1.00 | 1.00 | 1.00 |
| FinalVolume: | 100 | 0 | 228 | 0 | 0 | 0 | 0 | 199 | 71 | 191 | 189 | 0 |
| Saturation Flow Module: | | | | | | | | | | | | |
| Adjustment: | 1.00 | 1.00 | 1.00 | 1.00 | 1.00 | 1.00 | 1.00 | 1.00 | 1.00 | 1.00 | 1.00 | 1.00 |
| Lanes: | 0.30 | 0.00 | 0.70 | 0.00 | 0.00 | 0.00 | 0.00 | 0.74 | 0.26 | 0.50 | 0.50 | 0.00 |
| Final Sat.: | 204 | 0 | 466 | 0 | 0 | 0 | 0 | 494 | 178 | 336 | 333 | 0 |
| Capacity Analysis Module: | | | | | | | | | | | | |
| Vol/Sat: | 0.49 | xxxx | 0.49 | xxxx | xxxx | xxxx | xxxx | 0.40 | 0.40 | 0.57 | 0.57 | xxxx |
| Crit Moves: | **** | | | | | | | **** | | | **** | |
| Delay/Veh: | 12.3 | 0.0 | 12.3 | 0.0 | 0.0 | 0.0 | 0.0 | 11.2 | 11.2 | 14.4 | 14.4 | 0.0 |
| Delay Adj: | 1.00 | 1.00 | 1.00 | 1.00 | 1.00 | 1.00 | 1.00 | 1.00 | 1.00 | 1.00 | 1.00 | 1.00 |
| AdjDel/Veh: | 12.3 | 0.0 | 12.3 | 0.0 | 0.0 | 0.0 | 0.0 | 11.2 | 11.2 | 14.4 | 14.4 | 0.0 |
| LOS by Move: | B | * | B | * | * | * | * | B | B | B | B | * |
| ApproachDel: | 12.3 | | | xxxxxx | | | | 11.2 | | | 14.4 | |
| Delay Adj: | 1.00 | | | xxxxx | | | | 1.00 | | | 1.00 | |
| ApprAdjDel: | 12.3 | | | xxxxxx | | | | 11.2 | | | 14.4 | |
| LOS by Appr: | B | | | * | | | | B | | | B | |
| AllWayAvgQ: | 0.8 | 0.8 | 0.8 | 0.0 | 0.0 | 0.0 | 0.6 | 0.6 | 0.6 | 1.1 | 1.1 | 1.1 |

Note: Queue reported is the number of cars per lane.

Traffix 7.9.0215 (c) 2008 Dowling Assoc. Licensed to MMA, LONG BEACH, CA

Valle Verde Home Project
Existing+Ambient+Cumulative+Project (CUP Buildout)
PM Peak Hour

Level Of Service Computation Report
2000 HCM 4-Way Stop Method (Future Volume Alternative)

Intersection #8 Via Senda at Las Palmas Dr

Cycle (sec): 100 | Critical Vol./Cap.(X): 0.481
Loss Time (sec): 0 (Y+R=4.0 sec) | Average Delay (sec/veh): 12.5
Optimal Cycle: 0 | Level Of Service: B

| Street Name: | Via Senda | | | | | | Las Palmas Dr | | | | | |
|---|---|---|---|---|---|---|---|---|---|---|---|---|
| Approach: | North Bound | | | South Bound | | | East Bound | | | West Bound | | |
| Movement: | L - | T - | R | L - | T - | R | L - | T - | R | L - | T - | R |
| Control: | Stop Sign | | | Stop Sign | | | Stop Sign | | | Stop Sign | | |
| Rights: | Include | | | Include | | | Include | | | Include | | |
| Min. Green: | 0 | 0 | 0 | 0 | 0 | 0 | 0 | 0 | 0 | 0 | 0 | 0 |
| Lanes: | 0 0 | 0 0 | 0 | 0 0 | 1! 0 | 0 | 0 1 | 0 0 | 0 | 0 0 | 1 0 | 1 |
| Volume Module: | | | | | | | | | | | | |
| Base Vol: | 0 | 0 | 0 | 226 | 0 | 27 | 27 | 274 | 0 | 0 | 271 | 270 |
| Growth Adj: | 1.02 | 1.02 | 1.02 | 1.02 | 1.02 | 1.02 | 1.02 | 1.02 | 1.02 | 1.02 | 1.02 | 1.02 |
| Initial Bse: | 0 | 0 | 0 | 231 | 0 | 28 | 28 | 279 | 0 | 0 | 276 | 275 |
| Added Vol: | 0 | 0 | 0 | 10 | 0 | 0 | 0 | 2 | 0 | 0 | 6 | 18 |
| PasserByVol: | 0 | 0 | 0 | 0 | 0 | 0 | 0 | 0 | 0 | 0 | 0 | 0 |
| Initial Fut: | 0 | 0 | 0 | 241 | 0 | 28 | 28 | 281 | 0 | 0 | 282 | 293 |
| User Adj: | 1.00 | 1.00 | 1.00 | 1.00 | 1.00 | 1.00 | 1.00 | 1.00 | 1.00 | 1.00 | 1.00 | 1.00 |
| PHF Adj: | 1.00 | 1.00 | 1.00 | 1.00 | 1.00 | 1.00 | 1.00 | 1.00 | 1.00 | 1.00 | 1.00 | 1.00 |
| PHF Volume: | 0 | 0 | 0 | 241 | 0 | 28 | 28 | 281 | 0 | 0 | 282 | 293 |
| Reduct Vol: | 0 | 0 | 0 | 0 | 0 | 0 | 0 | 0 | 0 | 0 | 0 | 0 |
| Reduced Vol: | 0 | 0 | 0 | 241 | 0 | 28 | 28 | 281 | 0 | 0 | 282 | 293 |
| PCE Adj: | 1.00 | 1.00 | 1.00 | 1.00 | 1.00 | 1.00 | 1.00 | 1.00 | 1.00 | 1.00 | 1.00 | 1.00 |
| MLF Adj: | 1.00 | 1.00 | 1.00 | 1.00 | 1.00 | 1.00 | 1.00 | 1.00 | 1.00 | 1.00 | 1.00 | 1.00 |
| FinalVolume: | 0 | 0 | 0 | 241 | 0 | 28 | 28 | 281 | 0 | 0 | 282 | 293 |
| Saturation Flow Module: | | | | | | | | | | | | |
| Adjustment: | 1.00 | 1.00 | 1.00 | 1.00 | 1.00 | 1.00 | 1.00 | 1.00 | 1.00 | 1.00 | 1.00 | 1.00 |
| Lanes: | 0.00 | 0.00 | 0.00 | 0.90 | 0.00 | 0.10 | 0.09 | 0.91 | 0.00 | 0.00 | 1.00 | 1.00 |
| Final Sat.: | 0 | 0 | 0 | 527 | 0 | 60 | 57 | 585 | 0 | 0 | 624 | 712 |
| Capacity Analysis Module: | | | | | | | | | | | | |
| Vol/Sat: | xxxx | xxxx | xxxx | 0.46 | xxxx | 0.46 | 0.48 | 0.48 | xxxx | xxxx | 0.45 | 0.41 |
| Crit Moves: | | | | **** | | | | **** | | | **** | |
| Delay/Veh: | 0.0 | 0.0 | 0.0 | 13.2 | 0.0 | 13.2 | 13.1 | 13.1 | 0.0 | 0.0 | 12.8 | 11.0 |
| Delay Adj: | 1.00 | 1.00 | 1.00 | 1.00 | 1.00 | 1.00 | 1.00 | 1.00 | 1.00 | 1.00 | 1.00 | 1.00 |
| AdjDel/Veh: | 0.0 | 0.0 | 0.0 | 13.2 | 0.0 | 13.2 | 13.1 | 13.1 | 0.0 | 0.0 | 12.8 | 11.0 |
| LOS by Move: | * | * | * | B | * | B | B | B | * | * | B | B |
| ApproachDel: | xxxxxx | | | 13.2 | | | 13.1 | | | 11.9 | | |
| Delay Adj: | xxxxx | | | 1.00 | | | 1.00 | | | 1.00 | | |
| ApprAdjDel: | xxxxxx | | | 13.2 | | | 13.1 | | | 11.9 | | |
| LOS by Appr: | * | | | B | | | B | | | B | | |
| AllWayAvgQ: | 0.0 | 0.0 | 0.0 | 0.7 | 0.7 | 0.7 | 0.8 | 0.8 | 0.8 | 0.0 | 0.8 | 0.7 |

Note: Queue reported is the number of cars per lane.

Traffix 7.9.0215 (c) 2008 Dowling Assoc. Licensed to MMA, LONG BEACH, CA

Valle Verde Home Project
Existing+Ambient+Cumulative+Project (CUP Buildout)
PM Peak Hour

Level Of Service Computation Report
ICU 1(Loss as Cycle Length %) Method (Future Volume Alternative)

Intersection #9 Las Palmas/S La Cumbre Rd at US-101 SB Ramps

| | | | |
|---|---|---|---|
| Cycle (sec): | 100 | Critical Vol./Cap.(X): | 0.693 |
| Loss Time (sec): | 10 (Y+R=4.0 sec) | Average Delay (sec/veh): | xxxxxx |
| Optimal Cycle: | 49 | Level Of Service: | B |

| Approach: | North Bound | | | South Bound | | | East Bound | | | West Bound | | |
|---|---|---|---|---|---|---|---|---|---|---|---|---|
| Movement: | L | T | R | L | T | R | L | T | R | L | T | R |
| Control: | Protected | | | Protected | | | Protected | | | Protected | | |
| Rights: | Include | | | Include | | | Include | | | Include | | |
| Min. Green: | 0 | 0 | 0 | 0 | 0 | 0 | 0 | 0 | 0 | 0 | 0 | 0 |
| Lanes: | 0 0 2 | 0 | 1 | 2 0 1 | 0 | 0 | 1 1 0 | 0 | 1 | 0 0 0 | 0 | 0 |
| Volume Module: | | | | | | | | | | | | |
| Base Vol: | 0 | 314 | 144 | 599 | 385 | 0 | 604 | 1 | 75 | 0 | 0 | 0 |
| Growth Adj: | 1.02 | 1.02 | 1.02 | 1.02 | 1.02 | 1.02 | 1.02 | 1.02 | 1.02 | 1.02 | 1.02 | 1.02 |
| Initial Bse: | 0 | 320 | 147 | 611 | 393 | 0 | 616 | 1 | 77 | 0 | 0 | 0 |
| Added Vol: | 0 | 12 | 0 | 0 | 8 | 0 | 0 | 0 | 16 | 0 | 0 | 0 |
| PasserByVol: | 0 | 3 | 0 | 21 | 7 | 0 | 0 | 0 | 0 | 0 | 0 | 0 |
| Initial Fut: | 0 | 335 | 147 | 632 | 408 | 0 | 616 | 1 | 93 | 0 | 0 | 0 |
| User Adj: | 1.00 | 1.00 | 1.00 | 1.00 | 1.00 | 1.00 | 1.00 | 1.00 | 1.00 | 1.00 | 1.00 | 1.00 |
| PHF Adj: | 1.00 | 1.00 | 1.00 | 1.00 | 1.00 | 1.00 | 1.00 | 1.00 | 1.00 | 1.00 | 1.00 | 1.00 |
| PHF Volume: | 0 | 335 | 147 | 632 | 408 | 0 | 616 | 1 | 93 | 0 | 0 | 0 |
| Reduct Vol: | 0 | 0 | 0 | 0 | 0 | 0 | 0 | 0 | 0 | 0 | 0 | 0 |
| Reduced Vol: | 0 | 335 | 147 | 632 | 408 | 0 | 616 | 1 | 93 | 0 | 0 | 0 |
| PCE Adj: | 1.00 | 1.00 | 1.00 | 1.00 | 1.00 | 1.00 | 1.00 | 1.00 | 1.00 | 1.00 | 1.00 | 1.00 |
| MLF Adj: | 1.00 | 1.00 | 1.00 | 1.00 | 1.00 | 1.00 | 1.00 | 1.00 | 1.00 | 1.00 | 1.00 | 1.00 |
| FinalVolume: | 0 | 335 | 147 | 632 | 408 | 0 | 616 | 1 | 93 | 0 | 0 | 0 |
| Saturation Flow Module: | | | | | | | | | | | | |
| Sat/Lane: | 1600 | 1600 | 1600 | 1600 | 1600 | 1600 | 1600 | 1600 | 1600 | 1600 | 1600 | 1600 |
| Adjustment: | 1.00 | 1.00 | 1.00 | 0.80 | 1.00 | 1.00 | 0.80 | 1.00 | 1.00 | 1.00 | 1.00 | 1.00 |
| Lanes: | 0.00 | 2.00 | 1.00 | 2.00 | 1.00 | 0.00 | 1.99 | 0.01 | 1.00 | 0.00 | 0.00 | 0.00 |
| Final Sat.: | 0 | 3200 | 1600 | 2560 | 1600 | 0 | 2556 | 5 | 1600 | 0 | 0 | 0 |
| Capacity Analysis Module: | | | | | | | | | | | | |
| Vol/Sat: | 0.00 | 0.10 | 0.09 | 0.25 | 0.25 | 0.00 | 0.24 | 0.19 | 0.06 | 0.00 | 0.00 | 0.00 |
| Crit Moves: | | **** | | **** | | | **** | | | | | |

Valle Verde Home Project
Existing+Ambient+Cumulative+Project (CUP Buildout)
PM Peak Hour

Scenario Report

| | |
|---|---|
| Scenario: | E+A+C+P Alt2 PM |
| Command: | E+A+C+P Alt2 PM |
| Volume: | E+A+C+P PM |
| Geometry: | Existing |
| Impact Fee: | Default Impact Fee |
| Trip Generation: | PM Peak |
| Trip Distribution: | Trip Distribution |
| Paths: | Default Path |
| Routes: | Default Route |
| Configuration: | E+A+C+P Alt2 PM |

Valle Verde Home Project
Existing+Ambient+Cumulative+Project (CUP Buildout)
PM Peak Hour

Trip Generation Report

Forecast for PM Peak

| Zone # | Subzone | Amount | Units | Rate In | Rate Out | Trips In | Trips Out | Total Trips | % Of Total |
|---|---|---|---|---|---|---|---|---|---|
| 1 | 1235 Veronic | 1.00 | Residential | 44.00 | 21.00 | 44 | 21 | 65 | 11.3 |
| | Zone 1 Subtotal | | | | | 44 | 21 | 65 | 11.3 |
| 5 | 3820 State S | 1.00 | Office | 18.00 | 89.00 | 18 | 89 | 107 | 18.6 |
| | Zone 5 Subtotal | | | | | 18 | 89 | 107 | 18.6 |
| 6 | 900-1100 Las | 1.00 | Residential | 10.00 | 17.00 | 10 | 17 | 27 | 4.7 |
| | Zone 6 Subtotal | | | | | 10 | 17 | 27 | 4.7 |
| 12 | 215 Pesetas | 1.00 | Medical | 17.00 | 24.00 | 17 | 24 | 41 | 7.1 |
| | Zone 12 Subtotal | | | | | 17 | 24 | 41 | 7.1 |
| 13 | Elings Park | 1.00 | Park | 76.00 | 79.00 | 76 | 79 | 155 | 27.0 |
| | Zone 13 Subtotal | | | | | 76 | 79 | 155 | 27.0 |
| 14 | Cancer Cente | 1.00 | Medical Office | 47.00 | 120.00 | 47 | 120 | 167 | 29.1 |
| | Zone 14 Subtotal | | | | | 47 | 120 | 167 | 29.1 |
| 102 | Project (Val | 1.00 | Residential | 6.00 | 6.00 | 6 | 6 | 12 | 2.1 |
| | Zone 102 Subtotal | | | | | 6 | 6 | 12 | 2.1 |
| TOTAL | | | | | | 218 | 356 | 574 | 100.0 |

Valle Verde Home Project
Existing+Ambient+Cumulative+Project (CUP Buildout)
PM Peak Hour

Trip Distribution Report

Percent Of Trips Distribution

| | To Gates | | | | | | | | | | |
|---|---|---|---|---|---|---|---|---|---|---|---|
| Zone | 1 | 2 | 3 | 4 | 5 | 6 | 7 | 8 | 9 | 10 | 11 |
| 1 | 10.0 | 5.0 | 30.0 | 30.0 | 5.0 | 5.0 | 0.0 | 15.0 | 0.0 | 0.0 | 0.0 |
| 5 | 0.0 | 0.0 | 40.0 | 30.0 | 0.0 | 0.0 | 2.5 | 2.5 | 5.0 | 15.0 | 5.0 |
| 6 | 10.0 | 5.0 | 30.0 | 30.0 | 5.0 | 5.0 | 0.0 | 15.0 | 0.0 | 0.0 | 0.0 |
| 12 | 0.0 | 0.0 | 40.0 | 30.0 | 0.0 | 0.0 | 2.5 | 2.5 | 5.0 | 15.0 | 5.0 |
| 13 | 10.0 | 5.0 | 30.0 | 30.0 | 5.0 | 5.0 | 5.0 | 10.0 | 0.0 | 0.0 | 0.0 |
| 14 | 0.0 | 10.0 | 35.0 | 25.0 | 0.0 | 0.0 | 3.0 | 2.0 | 10.0 | 15.0 | 0.0 |
| 102 | 5.0 | 5.0 | 40.0 | 30.0 | 5.0 | 0.0 | 0.0 | 10.0 | 0.0 | 5.0 | 0.0 |

Valle Verde Home Project
Existing+Ambient+Cumulative+Project (CUP Buildout)
PM Peak Hour

Turning Movement Report
PM Peak

| Volume | Northbound | | | Southbound | | | Eastbound | | | Westbound | | | Total |
|---|---|---|---|---|---|---|---|---|---|---|---|---|---|
| Type | Left | Thru | Right | Left | Thru | Right | Left | Thru | Right | Left | Thru | Right | Volume |
| #6 Calle de los Amigos at Modoc Rd | | | | | | | | | | | | | |
| Base | 71 | 0 | 36 | 0 | 0 | 0 | 0 | 335 | 111 | 49 | 281 | 0 | 882 |
| Added | 10 | 0 | 1 | 0 | 0 | 0 | 0 | 20 | 5 | 1 | 6 | 0 | 43 |
| Total | 81 | 0 | 37 | 0 | 0 | 0 | 0 | 355 | 116 | 50 | 287 | 0 | 925 |
| #7 Via Senda at Modoc Rd | | | | | | | | | | | | | |
| Base | 100 | 0 | 210 | 0 | 0 | 0 | 0 | 192 | 71 | 181 | 183 | 0 | 936 |
| Added | 0 | 0 | 18 | 0 | 0 | 0 | 0 | 7 | 0 | 10 | 6 | 0 | 41 |
| Total | 100 | 0 | 228 | 0 | 0 | 0 | 0 | 199 | 71 | 191 | 189 | 0 | 977 |
| #8 Via Senda at Las Palmas Dr | | | | | | | | | | | | | |
| Base | 0 | 0 | 0 | 231 | 0 | 28 | 28 | 279 | 0 | 0 | 276 | 275 | 1117 |
| Added | 0 | 0 | 0 | 10 | 0 | 0 | 0 | 2 | 0 | 0 | 6 | 18 | 36 |
| Total | 0 | 0 | 0 | 241 | 0 | 28 | 28 | 281 | 0 | 0 | 282 | 293 | 1153 |
| #9 Las Palmas/S La Cumbre Rd at US-101 SB Ramps | | | | | | | | | | | | | |
| Base | 0 | 320 | 147 | 611 | 393 | 0 | 616 | 1 | 77 | 0 | 0 | 0 | 2164 |
| Added | 0 | 12 | 0 | 0 | 8 | 0 | 0 | 0 | 16 | 0 | 0 | 0 | 36 |
| PassBy | 0 | 3 | 0 | 21 | 7 | 0 | 0 | 0 | 0 | 0 | 0 | 0 | 31 |
| Total | 0 | 335 | 147 | 632 | 408 | 0 | 616 | 1 | 93 | 0 | 0 | 0 | 2231 |

Valle Verde Home Project
Existing+Ambient+Cumulative+Project (CUP Buildout)
PM Peak Hour

Impact Analysis Report
Level Of Service

| Intersection | Base LOS | Base Del/ Veh | Base V/ C | Future LOS | Future Del/ Veh | Future V/ C | Change in |
|---|---|---|---|---|---|---|---|
| # 6 Calle de los Amigos at Modoc R | C | 15.2 | 0.000 | C | 16.2 | 0.000 | + 1.019 D/V |
| # 7 Via Senda at Modoc Rd | B | 12.2 | 0.535 | B | 12.8 | 0.567 | + 0.032 V/C |
| # 8 Via Senda at Las Palmas Dr | B | 12.2 | 0.471 | B | 12.5 | 0.481 | + 0.009 V/C |
| # 9 Las Palmas/S La Cumbre Rd at | C | 27.5 | 0.601 | C | 27.6 | 0.613 | + 0.045 D/V |

Traffix 7.9.0215 (c) 2008 Dowling Assoc. Licensed to MMA, LONG BEACH, CA

Valle Verde Home Project
Existing+Ambient+Cumulative+Project (CUP Buildout)
PM Peak Hour

Level Of Service Computation Report
2000 HCM Unsignalized Method (Future Volume Alternative)

Intersection #6 Calle de los Amigos at Modoc Rd

Average Delay (sec/veh): 2.5  Worst Case Level Of Service: C[ 16.2]

| Street Name: | Calle de los Amigos | | | | | | Modoc Rd | | | | | |
|---|---|---|---|---|---|---|---|---|---|---|---|---|
| Approach: | North Bound | | | South Bound | | | East Bound | | | West Bound | | |
| Movement: | L - | T - | R | L - | T - | R | L - | T - | R | L - | T - | R |
| Control: | Stop Sign | | | Stop Sign | | | Uncontrolled | | | Uncontrolled | | |
| Rights: | Include | | | Include | | | Include | | | Include | | |
| Lanes: | 1 0 0 0 1 | | | 0 0 0 0 0 | | | 0 0 0 1 0 | | | 1 0 1 0 0 | | |
| Volume Module: | | | | | | | | | | | | |
| Base Vol: | 70 | 0 | 35 | 0 | 0 | 0 | 0 | 328 | 109 | 48 | 275 | 0 |
| Growth Adj: | 1.02 | 1.02 | 1.02 | 1.02 | 1.02 | 1.02 | 1.02 | 1.02 | 1.02 | 1.02 | 1.02 | 1.02 |
| Initial Bse: | 71 | 0 | 36 | 0 | 0 | 0 | 0 | 335 | 111 | 49 | 281 | 0 |
| Added Vol: | 10 | 0 | 1 | 0 | 0 | 0 | 0 | 20 | 5 | 1 | 6 | 0 |
| PasserByVol: | 0 | 0 | 0 | 0 | 0 | 0 | 0 | 0 | 0 | 0 | 0 | 0 |
| Initial Fut: | 81 | 0 | 37 | 0 | 0 | 0 | 0 | 355 | 116 | 50 | 287 | 0 |
| User Adj: | 1.00 | 1.00 | 1.00 | 1.00 | 1.00 | 1.00 | 1.00 | 1.00 | 1.00 | 1.00 | 1.00 | 1.00 |
| PHF Adj: | 1.00 | 1.00 | 1.00 | 1.00 | 1.00 | 1.00 | 1.00 | 1.00 | 1.00 | 1.00 | 1.00 | 1.00 |
| PHF Volume: | 81 | 0 | 37 | 0 | 0 | 0 | 0 | 355 | 116 | 50 | 287 | 0 |
| Reduct Vol: | 0 | 0 | 0 | 0 | 0 | 0 | 0 | 0 | 0 | 0 | 0 | 0 |
| FinalVolume: | 81 | 0 | 37 | 0 | 0 | 0 | 0 | 355 | 116 | 50 | 287 | 0 |
| Critical Gap Module: | | | | | | | | | | | | |
| Critical Gp: | 6.4 | xxxx | 6.2 | xxxxx | xxxx | xxxxx | xxxxx | xxxx | xxxxx | 4.1 | xxxx | xxxxx |
| FollowUpTim: | 3.5 | xxxx | 3.3 | xxxxx | xxxx | xxxxx | xxxxx | xxxx | xxxxx | 2.2 | xxxx | xxxxx |
| Capacity Module: | | | | | | | | | | | | |
| Cnflict Vol: | 799 | xxxx | 413 | xxxx | xxxx | xxxxx | xxxx | xxxx | xxxxx | 471 | xxxx | xxxxx |
| Potent Cap.: | 357 | xxxx | 644 | xxxx | xxxx | xxxxx | xxxx | xxxx | xxxxx | 1102 | xxxx | xxxxx |
| Move Cap.: | 345 | xxxx | 644 | xxxx | xxxx | xxxxx | xxxx | xxxx | xxxxx | 1102 | xxxx | xxxxx |
| Volume/Cap: | 0.24 | xxxx | 0.06 | xxxx | xxxx | xxxx | xxxx | xxxx | xxxx | 0.05 | xxxx | xxxx |
| Level Of Service Module: | | | | | | | | | | | | |
| 2Way95thQ: | 0.9 | xxxx | 0.2 | xxxx | xxxx | xxxxx | xxxx | xxxx | xxxxx | 0.1 | xxxx | xxxxx |
| Control Del: | 18.6 | xxxx | 10.9 | xxxxx | xxxx | xxxxx | xxxxx | xxxx | xxxxx | 8.4 | xxxx | xxxxx |
| LOS by Move: | C | * | B | * | * | * | * | * | * | A | * | * |
| Movement: | LT - | LTR - | RT | LT - | LTR - | RT | LT - | LTR - | RT | LT - | LTR - | RT |
| Shared Cap.: | xxxx | xxxx | xxxxx | xxxx | xxxx | xxxxx | xxxx | xxxx | xxxxx | xxxx | xxxx | xxxxx |
| SharedQueue: | xxxxx | xxxx | xxxxx | xxxxx | xxxx | xxxxx | xxxxx | xxxx | xxxxx | xxxxx | xxxx | xxxxx |
| Shrd ConDel: | xxxxx | xxxx | xxxxx | xxxxx | xxxx | xxxxx | xxxxx | xxxx | xxxxx | xxxxx | xxxx | xxxxx |
| Shared LOS: | * | * | * | * | * | * | * | * | * | * | * | * |
| ApproachDel: | 16.2 | | | xxxxxx | | | xxxxxx | | | xxxxxx | | |
| ApproachLOS: | C | | | * | | | * | | | * | | |

Note: Queue reported is the number of cars per lane.

Valle Verde Home Project
Existing+Ambient+Cumulative+Project (CUP Buildout)
PM Peak Hour

Level Of Service Computation Report
2000 HCM 4-Way Stop Method (Future Volume Alternative)

Intersection #7 Via Senda at Modoc Rd

Cycle (sec): 100 | Critical Vol./Cap.(X): 0.567
Loss Time (sec): 0 (Y+R=4.0 sec) | Average Delay (sec/veh): 12.8
Optimal Cycle: 0 | Level Of Service: B

| Street Name: | Via Senda | | | | | | Modoc Rd | | | | | |
|---|---|---|---|---|---|---|---|---|---|---|---|---|
| Approach: | North Bound | | | South Bound | | | East Bound | | | West Bound | | |
| Movement: | L - | T - | R | L - | T - | R | L - | T - | R | L - | T - | R |
| Control: | Stop Sign | | | Stop Sign | | | Stop Sign | | | Stop Sign | | |
| Rights: | Include | | | Include | | | Include | | | Include | | |
| Min. Green: | 0 | 0 | 0 | 0 | 0 | 0 | 0 | 0 | 0 | 0 | 0 | 0 |
| Lanes: | 0 0 | 1! 0 | 0 | 0 0 | 0 0 | 0 | 0 0 | 0 1 | 0 | 0 1 | 0 0 | 0 |
| Volume Module: | | | | | | | | | | | | |
| Base Vol: | 98 | 0 | 206 | 0 | 0 | 0 | 0 | 188 | 70 | 177 | 179 | 0 |
| Growth Adj: | 1.02 | 1.02 | 1.02 | 1.02 | 1.02 | 1.02 | 1.02 | 1.02 | 1.02 | 1.02 | 1.02 | 1.02 |
| Initial Bse: | 100 | 0 | 210 | 0 | 0 | 0 | 0 | 192 | 71 | 181 | 183 | 0 |
| Added Vol: | 0 | 0 | 18 | 0 | 0 | 0 | 0 | 7 | 0 | 10 | 6 | 0 |
| PasserByVol: | 0 | 0 | 0 | 0 | 0 | 0 | 0 | 0 | 0 | 0 | 0 | 0 |
| Initial Fut: | 100 | 0 | 228 | 0 | 0 | 0 | 0 | 199 | 71 | 191 | 189 | 0 |
| User Adj: | 1.00 | 1.00 | 1.00 | 1.00 | 1.00 | 1.00 | 1.00 | 1.00 | 1.00 | 1.00 | 1.00 | 1.00 |
| PHF Adj: | 1.00 | 1.00 | 1.00 | 1.00 | 1.00 | 1.00 | 1.00 | 1.00 | 1.00 | 1.00 | 1.00 | 1.00 |
| PHF Volume: | 100 | 0 | 228 | 0 | 0 | 0 | 0 | 199 | 71 | 191 | 189 | 0 |
| Reduct Vol: | 0 | 0 | 0 | 0 | 0 | 0 | 0 | 0 | 0 | 0 | 0 | 0 |
| Reduced Vol: | 100 | 0 | 228 | 0 | 0 | 0 | 0 | 199 | 71 | 191 | 189 | 0 |
| PCE Adj: | 1.00 | 1.00 | 1.00 | 1.00 | 1.00 | 1.00 | 1.00 | 1.00 | 1.00 | 1.00 | 1.00 | 1.00 |
| MLF Adj: | 1.00 | 1.00 | 1.00 | 1.00 | 1.00 | 1.00 | 1.00 | 1.00 | 1.00 | 1.00 | 1.00 | 1.00 |
| FinalVolume: | 100 | 0 | 228 | 0 | 0 | 0 | 0 | 199 | 71 | 191 | 189 | 0 |
| Saturation Flow Module: | | | | | | | | | | | | |
| Adjustment: | 1.00 | 1.00 | 1.00 | 1.00 | 1.00 | 1.00 | 1.00 | 1.00 | 1.00 | 1.00 | 1.00 | 1.00 |
| Lanes: | 0.30 | 0.00 | 0.70 | 0.00 | 0.00 | 0.00 | 0.00 | 0.74 | 0.26 | 0.50 | 0.50 | 0.00 |
| Final Sat.: | 204 | 0 | 466 | 0 | 0 | 0 | 0 | 494 | 178 | 336 | 333 | 0 |
| Capacity Analysis Module: | | | | | | | | | | | | |
| Vol/Sat: | 0.49 | xxxx | 0.49 | xxxx | xxxx | xxxx | xxxx | 0.40 | 0.40 | 0.57 | 0.57 | xxxx |
| Crit Moves: | **** | | | | | | | **** | | | **** | |
| Delay/Veh: | 12.3 | 0.0 | 12.3 | 0.0 | 0.0 | 0.0 | 0.0 | 11.2 | 11.2 | 14.4 | 14.4 | 0.0 |
| Delay Adj: | 1.00 | 1.00 | 1.00 | 1.00 | 1.00 | 1.00 | 1.00 | 1.00 | 1.00 | 1.00 | 1.00 | 1.00 |
| AdjDel/Veh: | 12.3 | 0.0 | 12.3 | 0.0 | 0.0 | 0.0 | 0.0 | 11.2 | 11.2 | 14.4 | 14.4 | 0.0 |
| LOS by Move: | B | * | B | * | * | * | * | B | B | B | B | * |
| ApproachDel: | 12.3 | | | xxxxxx | | | | 11.2 | | | 14.4 | |
| Delay Adj: | 1.00 | | | xxxxx | | | | 1.00 | | | 1.00 | |
| ApprAdjDel: | 12.3 | | | xxxxxx | | | | 11.2 | | | 14.4 | |
| LOS by Appr: | B | | | * | | | | B | | | B | |
| AllWayAvgQ: | 0.8 | 0.8 | 0.8 | 0.0 | 0.0 | 0.0 | 0.6 | 0.6 | 0.6 | 1.1 | 1.1 | 1.1 |

Note: Queue reported is the number of cars per lane.

Valle Verde Home Project
Existing+Ambient+Cumulative+Project (CUP Buildout)
PM Peak Hour

Level Of Service Computation Report
2000 HCM 4-Way Stop Method (Future Volume Alternative)

Intersection #8 Via Senda at Las Palmas Dr

Cycle (sec): 100 | Critical Vol./Cap.(X): 0.481
Loss Time (sec): 0 (Y+R=4.0 sec) | Average Delay (sec/veh): 12.5
Optimal Cycle: 0 | Level Of Service: B

| Street Name: | Via Senda | | | | | | Las Palmas Dr | | | | | |
|---|---|---|---|---|---|---|---|---|---|---|---|---|
| Approach: | North Bound | | | South Bound | | | East Bound | | | West Bound | | |
| Movement: | L - | T - | R | L - | T - | R | L - | T - | R | L - | T - | R |
| Control: | Stop Sign | | | Stop Sign | | | Stop Sign | | | Stop Sign | | |
| Rights: | Include | | | Include | | | Include | | | Include | | |
| Min. Green: | 0 | 0 | 0 | 0 | 0 | 0 | 0 | 0 | 0 | 0 | 0 | 0 |
| Lanes: | 0 0 | 0 0 | 0 | 0 0 | 1! 0 | 0 | 0 1 | 0 0 | 0 | 0 0 | 1 0 | 1 |
| Volume Module: | | | | | | | | | | | | |
| Base Vol: | 0 | 0 | 0 | 226 | 0 | 27 | 27 | 274 | 0 | 0 | 271 | 270 |
| Growth Adj: | 1.02 | 1.02 | 1.02 | 1.02 | 1.02 | 1.02 | 1.02 | 1.02 | 1.02 | 1.02 | 1.02 | 1.02 |
| Initial Bse: | 0 | 0 | 0 | 231 | 0 | 28 | 28 | 279 | 0 | 0 | 276 | 275 |
| Added Vol: | 0 | 0 | 0 | 10 | 0 | 0 | 0 | 2 | 0 | 0 | 6 | 18 |
| PasserByVol: | 0 | 0 | 0 | 0 | 0 | 0 | 0 | 0 | 0 | 0 | 0 | 0 |
| Initial Fut: | 0 | 0 | 0 | 241 | 0 | 28 | 28 | 281 | 0 | 0 | 282 | 293 |
| User Adj: | 1.00 | 1.00 | 1.00 | 1.00 | 1.00 | 1.00 | 1.00 | 1.00 | 1.00 | 1.00 | 1.00 | 1.00 |
| PHF Adj: | 1.00 | 1.00 | 1.00 | 1.00 | 1.00 | 1.00 | 1.00 | 1.00 | 1.00 | 1.00 | 1.00 | 1.00 |
| PHF Volume: | 0 | 0 | 0 | 241 | 0 | 28 | 28 | 281 | 0 | 0 | 282 | 293 |
| Reduct Vol: | 0 | 0 | 0 | 0 | 0 | 0 | 0 | 0 | 0 | 0 | 0 | 0 |
| Reduced Vol: | 0 | 0 | 0 | 241 | 0 | 28 | 28 | 281 | 0 | 0 | 282 | 293 |
| PCE Adj: | 1.00 | 1.00 | 1.00 | 1.00 | 1.00 | 1.00 | 1.00 | 1.00 | 1.00 | 1.00 | 1.00 | 1.00 |
| MLF Adj: | 1.00 | 1.00 | 1.00 | 1.00 | 1.00 | 1.00 | 1.00 | 1.00 | 1.00 | 1.00 | 1.00 | 1.00 |
| FinalVolume: | 0 | 0 | 0 | 241 | 0 | 28 | 28 | 281 | 0 | 0 | 282 | 293 |
| Saturation Flow Module: | | | | | | | | | | | | |
| Adjustment: | 1.00 | 1.00 | 1.00 | 1.00 | 1.00 | 1.00 | 1.00 | 1.00 | 1.00 | 1.00 | 1.00 | 1.00 |
| Lanes: | 0.00 | 0.00 | 0.00 | 0.90 | 0.00 | 0.10 | 0.09 | 0.91 | 0.00 | 0.00 | 1.00 | 1.00 |
| Final Sat.: | 0 | 0 | 0 | 527 | 0 | 60 | 57 | 585 | 0 | 0 | 624 | 712 |
| Capacity Analysis Module: | | | | | | | | | | | | |
| Vol/Sat: | xxxx | xxxx | xxxx | 0.46 | xxxx | 0.46 | 0.48 | 0.48 | xxxx | xxxx | 0.45 | 0.41 |
| Crit Moves: | | | | **** | | | | **** | | | **** | |
| Delay/Veh: | 0.0 | 0.0 | 0.0 | 13.2 | 0.0 | 13.2 | 13.1 | 13.1 | 0.0 | 0.0 | 12.8 | 11.0 |
| Delay Adj: | 1.00 | 1.00 | 1.00 | 1.00 | 1.00 | 1.00 | 1.00 | 1.00 | 1.00 | 1.00 | 1.00 | 1.00 |
| AdjDel/Veh: | 0.0 | 0.0 | 0.0 | 13.2 | 0.0 | 13.2 | 13.1 | 13.1 | 0.0 | 0.0 | 12.8 | 11.0 |
| LOS by Move: | * | * | * | B | * | B | B | B | * | * | B | B |
| ApproachDel: | xxxxxx | | | 13.2 | | | 13.1 | | | 11.9 | | |
| Delay Adj: | xxxxx | | | 1.00 | | | 1.00 | | | 1.00 | | |
| ApprAdjDel: | xxxxxx | | | 13.2 | | | 13.1 | | | 11.9 | | |
| LOS by Appr: | * | | | B | | | B | | | B | | |
| AllWayAvgQ: | 0.0 | 0.0 | 0.0 | 0.7 | 0.7 | 0.7 | 0.8 | 0.8 | 0.8 | 0.0 | 0.8 | 0.7 |

Note: Queue reported is the number of cars per lane.

Traffix 7.9.0215 (c) 2008 Dowling Assoc. Licensed to MMA, LONG BEACH, CA

Valle Verde Home Project
Existing+Ambient+Cumulative+Project (CUP Buildout)
PM Peak Hour

Level Of Service Computation Report
2000 HCM Operations Method (Future Volume Alternative)

Intersection #9 Las Palmas/S La Cumbre Rd at US-101 SB Ramps

| | | | |
|---|---|---|---|
| Cycle (sec): | 100 | Critical Vol./Cap.(X): | 0.613 |
| Loss Time (sec): | 10 (Y+R=4.0 sec) | Average Delay (sec/veh): | 27.6 |
| Optimal Cycle: | 45 | Level Of Service: | C |

| Approach: | North Bound | | | South Bound | | | East Bound | | | West Bound | | |
|---|---|---|---|---|---|---|---|---|---|---|---|---|
| Movement: | L | T | R | L | T | R | L | T | R | L | T | R |
| Control: | Protected | | | Protected | | | Protected | | | Protected | | |
| Rights: | Include | | | Include | | | Include | | | Include | | |
| Min. Green: | 0 | 0 | 0 | 0 | 0 | 0 | 0 | 0 | 0 | 0 | 0 | 0 |
| Lanes: | 0 0 2 | 0 | 1 | 2 0 1 | 0 | 0 | 1 1 0 | 0 | 1 | 0 0 0 | 0 | 0 |
| Volume Module: | | | | | | | | | | | | |
| Base Vol: | 0 | 314 | 144 | 599 | 385 | 0 | 604 | 1 | 75 | 0 | 0 | 0 |
| Growth Adj: | 1.02 | 1.02 | 1.02 | 1.02 | 1.02 | 1.02 | 1.02 | 1.02 | 1.02 | 1.02 | 1.02 | 1.02 |
| Initial Bse: | 0 | 320 | 147 | 611 | 393 | 0 | 616 | 1 | 77 | 0 | 0 | 0 |
| Added Vol: | 0 | 12 | 0 | 0 | 8 | 0 | 0 | 0 | 16 | 0 | 0 | 0 |
| PasserByVol: | 0 | 3 | 0 | 21 | 7 | 0 | 0 | 0 | 0 | 0 | 0 | 0 |
| Initial Fut: | 0 | 335 | 147 | 632 | 408 | 0 | 616 | 1 | 93 | 0 | 0 | 0 |
| User Adj: | 1.00 | 1.00 | 1.00 | 1.00 | 1.00 | 1.00 | 1.00 | 1.00 | 1.00 | 1.00 | 1.00 | 1.00 |
| PHF Adj: | 1.00 | 1.00 | 1.00 | 1.00 | 1.00 | 1.00 | 1.00 | 1.00 | 1.00 | 1.00 | 1.00 | 1.00 |
| PHF Volume: | 0 | 335 | 147 | 632 | 408 | 0 | 616 | 1 | 93 | 0 | 0 | 0 |
| Reduct Vol: | 0 | 0 | 0 | 0 | 0 | 0 | 0 | 0 | 0 | 0 | 0 | 0 |
| Reduced Vol: | 0 | 335 | 147 | 632 | 408 | 0 | 616 | 1 | 93 | 0 | 0 | 0 |
| PCE Adj: | 1.00 | 1.00 | 1.00 | 1.00 | 1.00 | 1.00 | 1.00 | 1.00 | 1.00 | 1.00 | 1.00 | 1.00 |
| MLF Adj: | 1.00 | 1.00 | 1.00 | 1.00 | 1.00 | 1.00 | 1.00 | 1.00 | 1.00 | 1.00 | 1.00 | 1.00 |
| FinalVolume: | 0 | 335 | 147 | 632 | 408 | 0 | 616 | 1 | 93 | 0 | 0 | 0 |
| Saturation Flow Module: | | | | | | | | | | | | |
| Sat/Lane: | 1900 | 1900 | 1900 | 1900 | 1900 | 1900 | 1900 | 1900 | 1900 | 1900 | 1900 | 1900 |
| Adjustment: | 1.00 | 0.95 | 0.85 | 0.74 | 1.00 | 1.00 | 0.70 | 0.87 | 0.85 | 1.00 | 1.00 | 1.00 |
| Lanes: | 0.00 | 2.00 | 1.00 | 2.00 | 1.00 | 0.00 | 1.99 | 0.01 | 1.00 | 0.00 | 0.00 | 0.00 |
| Final Sat.: | 0 | 3610 | 1615 | 2801 | 1900 | 0 | 2641 | 4 | 1615 | 0 | 0 | 0 |
| Capacity Analysis Module: | | | | | | | | | | | | |
| Vol/Sat: | 0.00 | 0.09 | 0.09 | 0.23 | 0.21 | 0.00 | 0.23 | 0.23 | 0.06 | 0.00 | 0.00 | 0.00 |
| Crit Moves: | | **** | | **** | | | **** | | | | | |
| Green/Cycle: | 0.00 | 0.15 | 0.15 | 0.37 | 0.52 | 0.00 | 0.38 | 0.38 | 0.38 | 0.00 | 0.00 | 0.00 |
| Volume/Cap: | 0.00 | 0.61 | 0.60 | 0.61 | 0.41 | 0.00 | 0.61 | 0.61 | 0.15 | 0.00 | 0.00 | 0.00 |
| Delay/Veh: | 0.0 | 41.7 | 43.7 | 26.9 | 15.0 | 0.0 | 26.2 | 26.2 | 20.5 | 0.0 | 0.0 | 0.0 |
| User DelAdj: | 1.00 | 1.00 | 1.00 | 1.00 | 1.00 | 1.00 | 1.00 | 1.00 | 1.00 | 1.00 | 1.00 | 1.00 |
| AdjDel/Veh: | 0.0 | 41.7 | 43.7 | 26.9 | 15.0 | 0.0 | 26.2 | 26.2 | 20.5 | 0.0 | 0.0 | 0.0 |
| LOS by Move: | A | D | D | C | B | A | C | C | C | A | A | A |
| HCM2kAvgQ: | 0 | 6 | 5 | 9 | 8 | 0 | 8 | 10 | 2 | 0 | 0 | 0 |

Note: Queue reported is the number of cars per lane.

# APPENDIX C

## APPLICANT-PROVIDED EMPLOYEE TRAVEL SURVEY

# Valle Verde Traffic Survey Results

December 2009

Total Surveys Returned: 180
Total Number of Employees: 212
Confidence Level: 95%
Confidence Interval: +/- 2.84%

* Answer percentages are rounded to nearest value; not all questions were answered.

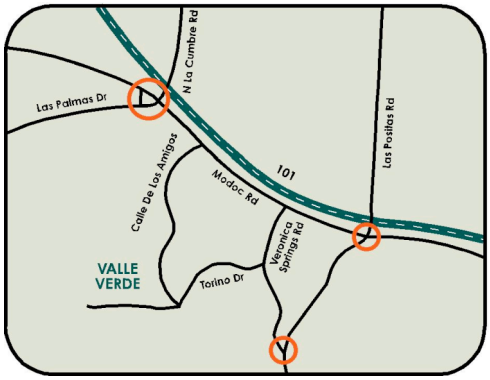


1. How do you arrive at the Valle Verde campus?
   - 36% La Cumbre Rd. & Modoc Rd.
   - 13% Modoc Rd. (from Goleta, not via Hwy 101)
   - 41% Las Positas Rd. & Modoc Rd.
   - 9% Veronic Springs Rd. & Los Positas Rd.
   - 1% Other

2. When do you generally arrive at the campus?
   - 28% Midnight to 6:59am
   - 36% 7:00am to 9:00am
   - 29% 9:01am to 3:59pm
   - 3% 4:00pm to 6:00pm
   - 0% 6:01pm to 7:00pm
   - 5% 7:01pm to midnight

3. Please indicate the direction you travel when you leave campus:
   - 29% La Cumbre Rd. & Modoc Rd.
   - 17% Modoc Rd. (from Goleta, not via Hwy 101)
   - 39% Las Positas Rd. & Modoc Rd.
   - 10% Veronic Springs Rd. & Los Positas Rd.
   - 1% Other

4. When do you generally leave campus?
   - 3% Midnight to 6:59am
   - 6% 7:00am to 9:00am
   - 36% 9:01am to 3:59pm
   - 25% 4:00pm to 6:00pm
   - 7% 6:01pm to 7:00pm
   - 24% 7:01pm to midnight

5. Do you work weekdays, weekends, or both?
   - 27% Weekdays
   - 2% Weekends
   - 63% Both

6. Do you use alternative trasportation, such as carpooling, bus, bike, etc.?
   - 28% Yes
   - 64% No

   Of the people who use alternative transporation (multiple answers possible):
   - 78% Carpool
   - 25% Bus
   - 10% Bike
   - 8% Walk

# APPENDIX D

## SANTA BARBARA COUNTY
## CONGESTION MANAGEMENT PROGRAM
## IMPACT ASSESSMENT GUIDELINES

SBCAG
santa barbara county association of governments

260 North San Antonio Road., Suite B ▪ Santa Barbara, CA ▪ 93110
Phone: 805/961-8900 ▪ Fax: 805/961-8901 ▪ www.sbcag.org

# 2009

# SANTA BARBARA COUNTY CONGESTION MANAGEMENT PROGRAM

APPROVED JUNE 18, 2009

Member Agencies
Buellton ▪ Carpinteria ▪ Goleta ▪ Guadalupe ▪ Lompoc ▪ Santa Barbara ▪ Santa Maria ▪ Solvang ▪ Santa Barbara County

# APPENDIX J - CMP IMPACT ASSESSMENT GUIDELINES FOR ENVIRONMENTAL DOCUMENTS

As the Congestion Management Agency for Santa Barbara County, SBCAG is required to review and approve the traffic impact analysis of Negative Declarations and Environmental Impact Reports for the County. This is to ensure that any proposed development would not create additional traffic impacts to the adopted Congestion Management Program regional street network. Should significant impacts be expected, mitigation measures must be taken to avoid deterioration of the system.

The thresholds of significant impact to the CMP network and guidelines for evaluating impacts to the proposed development are provided below. These guidelines should be followed when conducting the traffic impact analysis for Negative Declarations and Environmental Impact Reports. Note that the guidelines only apply to development projects that generate more than 500 average daily trips or 50 P.M. peak hour trips.

## THRESHOLDS OF SIGNIFICANT IMPACT TO THE CMP NETWORK

1. For any roadway or intersection operating at LOS A or B, a decrease of two levels of service from project-added traffic.
2. For any roadway or intersection operating at LOS C, project-added traffic that results in LOS D or worse.
3. For intersections on the CMP network with existing congestion, the following table defines the CMP thresholds of significant impact:

| *Intersection Level of Service* | *Project-Added Peak Hour Trips* |
|---|---|
| D | 20 |
| E or F | 10 |

For freeway or highway segments with existing congestion, the following table will define significant impacts:

| *Highway Level of Service* | *Project-Added Peak Hour Trips* |
|---|---|
| D | 100 |
| E or F | 50 |

## GUIDELINES FOR EVALUATING CMP IMPACTS FOR NEGATIVE DECLARATIONS AND ENVIRONMENTAL IMPACT REPORTS

1. Identify the designated CMP roadway system in relation to the location of the proposed development.
2. Analyze and compare how the proposed development would impact the identified CMP network (roadways and/or intersections). Use the Intersection Capacity Utilization method for computing intersection volume/capacity and determine LOS.
3. Analyze “Cumulative” and “Cumulative + Project” impacts to the CMP system.
4. Identify any inter-jurisdictional impacts to neighboring jurisdictions.
5. Incorporate analysis to include a demonstration that any identified CMP network impacts are mitigated to an acceptable level of service.
6. Assess the need for a mitigation monitoring program to evaluate effectiveness of project conditions.

The CMP network impacts should be conducted under a separate heading in the environmental document. If the roadways impacted are identical to the CMP network, they should be mentioned. If the project does not result in any significant impacts, the analysis should simply state that there are no significant impacts to the CMP network.